ENGINEER’S REPORT FOR SUMMIT CLUB WATER-SUPPLY SYSTEM

Summit Club
Town of North Castle
Westchester County, New York

DRAFT

PROJECT NO.: 31403576.000
DATE: AUGUST 2022

WSP USA
6 RESEARCH DRIVE, SUITE 260
SHELTON, CT 06484

PHONE: +1 (203) 929-8555
FAX: +1 (203) 926-9140
wsp.com

SIGNATURES

PREPARED BY:

Michael J. Shortell
Lead Environmental Engineer

REVIEWED BY:

Stephen K. Rupar, P.E
Vice President

This report was prepared by WSP USA (WSP) for the account of Summit Club Manor, in accordance with the professional services agreement. The disclosure of any information contained in this report is the sole responsibility of the intended recipient. The material in it reflects WSP's best judgement in light of the information available to it at the time of preparation. Any use that a third party makes of this report, or any reliance on or decisions to be made based on it, are the responsibility of such third parties. WSP accepts no responsibility for damages, if any, suffered by any third party as a result of decisions made or actions based on this report. This limitations statement is considered part of this report.

TABLE OF CONTENTS

PLATES

1.0 INTRODUCTION

WSP USA (WSP) has prepared the Engineer's Report and the plans and specifications for the proposed water-supply system for the Summit Club in North Castle, New York. The proposed Summit Club will consist of six, three-story residential structures which include 88 units. The residential units will consist of a mix of 2, 3 and 4-bedroom units resulting in a total of 211 bedrooms. Other aspects to the development will include a clubhouse, a banquet hall and a golf course with a total estimated average daily demand of 40,903 gallons per day (gpd). The water-supply system will include three bedrock water-supply wells (Well 1, Well 3 and Well 6A) and a 105,000-gallon glass lined above-grade atmospheric storage tank. The water treatment system will include a particulate filtration system consisting of a 5-micron cartridge filter and a 1-micron (absolute) cartridge filter followed by an ultraviolet light disinfection (UV) system then chlorination of the groundwater from all three bedrock water-supply wells. Disinfection contact time will be provided by an 82-foot section of 24-inch C905 PVC pipe that will be installed prior to the 105,000-gallon atmospheric storage tank. The proposed construction is displayed on the attached plans. Well logs for Well 5, Well 7 and Well 8 are included in Appendix I.

The raw water lines will consist of a below-grade, 3-inch (for Well 3) and 4-inch (For Well 1 and Well 6A) diameter high-density polyethylene (HDPE) pipe that will be installed from the proposed treatment building to the opposite side of the property and under onsite wetlands using a combination of directional drilling and open excavation techniques. Directional drilling has been selected as the manner in which the raw water main will be installed for the vast majority of the length of the raw water lines (from the entry pit to exit pit as shown on the plans). This method was selected to allow for crossing the wetlands without disturbing the wetlands. In addition, this method is the preferred manner for wetland crossings with the New York State Department of Environmental Protection (NYSDEC) considering the entry pit and exit pit for the directional drilling are located outside of the wetland buffer. The proposed raw water lines would be installed in accordance with the Inadvertent Return Contingency Plan (Plan). This Plan is included as Appendix II. The drilling fluids used would be a bentonite clay/water mixture and any excess drilling fluids would be containerized within two 10,000-gallon frac tanks that will be positioned near the drill rig. The excess bentonite clay/water mixture would be disposed of offsite in accordance with all New York State and Federal regulations. Valves will be provided on all the water piping at the directional drill entry pit and exit pit, on both sides of the wetland crossing, in accordance with Section 8.9.2 of Recommended Standards for Water Works, 2018 Edition (RSWW). Section 8.9.2 of the RSWW also indicates that the following will be provided: "permanent taps or other provisions to allow insertion of a small meter to determine leakage and obtain water samples on each side of the valve closest to the source of supply". We are requesting a waiver from this requirement because it is considered that any taps on the water lines have the potential to introduce contamination into the water supply. In addition, if there is a need to determine if there is leakage in this section of the water main, an existing tap within the proposed treatment building can be utilized, in coordination with the proposed valve at the exit pit, to conduct a short-term leakage test.

A 72-hour pumping test was conducted on Well 1, Well 3 and Well 6A during June 2022. The 72-hour pumping test included the collection of water samples for a full New York State (NYS) Subpart 5 water-quality analysis including microparticulate analysis (MPA), which is discussed within the 72-hour pumping test. The report documenting the 72-hour yield test is included in Appendix III and the laboratory report that identifies the water quality is included in the 72-hour yield test report. The 72-hour pumping test demonstrated a stabilized yield of 37 gpm (gallons per minute), 33 gpm and 43 gpm for Well 1, Well 3 and Well 6A, respectively.

2.0 WATER-SUPPLY SYSTEM DESCRIPTION

The proposed equipment is included in the appendices described below:

- Appendix IV: Manufacturer's information sheets and submersible well pump curves, pitless units and NSF certifications.
- Appendix V: Manufacturer's information sheets for disinfection equipment (chemical metering pumps, flow meter, pump control module and chemical storage tank) and NSF certification.
- Appendix VI: Manufacturer's sheets for the 105,000-gallon underground atmospheric storage tanks, the hydropneumatic storage tank and NSF certification.
- Appendix VII: Manufacturer's information sheets and transfer pump curves and NSF certifications.

3.0 DESIGN ASSUMPTIONS

Design assumptions and features of the water-supply system are as follows:

- The scope of the design work for this project, and this associated Engineer's Report, covers the treatment equipment, pumping units, atmospheric storage and operational control of Well 1, Well 3 and Well 6A.
- The potable water system has been designed in accordance with: 1) the New York State Sanitary Code, Part 5 - Drinking Water Supplies; 2) The Recommended Standards for Water Works, 2018 Edition; and 3) The New York State Department of Health Guidelines for Rural Water Supply.
- The 24-inch diameter contact pipe is being utilized to provide 4-log disinfection.

4.0 EQUIPMENT SIZING

The proposed equipment is discussed below. Manufacturer's information sheets are included in the Appendices attached to this report.

4.1 Submersible Well Pumps

The total depth of Well 1 is 645 feet and based on a 72-hour yield test, the well is artesian and the safe yield is 37 gpm at a stabilized pumping water level of 248 feet below land surface (177 ft msl (feet mean sea level)). The pump in Well 1 will be set at 275 feet below land surface. Well 1 is constructed with a 6-inch diameter casing to a depth of 51 feet and the land surface elevation in the area of Well 1 is approximately 425 ft msl. The submersible well pump will convey groundwater from the well through the proposed treatment building and into the 105,000-gallon atmospheric storage tank. The maximum elevation of the overflow in the proposed 105,000-gallon atmospheric storage tank is 589 ft msl. This configuration results in a lift of 164 feet under a static water level condition and 412 feet under a pumping condition for the pump in Well 1. Friction losses associated with pumping the water from the well to the 105,000-gallon atmospheric storage tank are approximately 6 feet. This results in a total of 208 feet of head loss and 418 feet of head loss, respectively, under a static and pumping condition. A 10% safety factor (21 feet under static and 42 feet under a pumping condition) has been included which results in a total dynamic head (TDH) of approximately 228 feet under a static condition and 500 feet under a pumping condition. A Goulds Model 35GS50 submersible pump has been selected and is capable of pumping up to 30 gpm at 500 feet of TDH. This pump has been selected to allow for operation without inducing backpressure on the submersible well pump without lowering the water level below the stabilized pumping water level. The static and pumping condition total dynamic head calculations are included in Appendix VIII.

The total depth of Well 3 is 645 feet and based on a 72-hour yield test, the well is artesian and the safe yield is 33 gpm at a stabilized pumping water level of 109 feet below land surface (328 ft msl). The pump in Well 3 will be set at 150 feet below land surface. Well 3 is constructed with a 6-inch diameter casing to a depth of 61 feet and the land surface elevation in the area of Well 3 is approximately 437 ft msl. The submersible well pump will convey groundwater from the well through the proposed treatment building and into the 105,000-gallon atmospheric storage tank. The maximum elevation of the overflow in the proposed 105,000-gallon atmospheric storage tanks is 589 ft msl. This configuration results in a lift of 152 feet under a static condition and 261 feet under a pumping condition for the pump in Well 3. Friction losses associated with pumping the water from the well to the 105,000-gallon atmospheric storage tank are approximately 3 feet. This results in a total head loss of 192 feet under a static condition and 300 feet under a pumping condition. A 10% safety factor (19 feet under static condition and 30 feet under a pumping condition) has been included which results in a TDH of approximately 211 feet under a static condition and 331 feet under a pumping condition. A Goulds Model 35GS50 submersible pump has been selected and is capable of pumping up 30 gpm at 500 feet of TDH. This pump will need to operate with induced backpressure to prevent over pumping the well. The total dynamic head calculation is included in Appendix VIII.

The total depth of Well 6A is 625 feet and based on a 72-hour yield test, the well is artesian and the safe yield is 43 gpm at a stabilized pumping water level of 109 feet below land surface (320 ft msl). The pump in Well 6A will be set at 150 feet below land surface. Well 6A is constructed with a 6-inch diameter casing to a depth of 61 feet and the land surface elevation in the area of Well 6A is approximately 429 ft msl. The submersible well pump will convey groundwater from the well through the proposed treatment equipment and into the 105,000-gallon atmospheric storage tank. The maximum elevation of the overflow in the proposed below-grade 105,000-gallon atmospheric storage tank is 589 ft msl. This configuration results in a lift of 160 feet under a static condition and 269 feet under a pumping condition for the pump in Well 6A. Friction losses associated with pumping the water from the well to the 105,000-gallon atmospheric storage tank are approximately 7 feet. This results in a head loss of 204 feet under a static condition and 313 feet under a pumping condition. A 10% safety factor (20 feet under a static condition and 31 feet under a pumping condition) has been included which results in a TDH of approximately 225 under a static condition and 345 under a pumping condition. A Goulds Model 45GS50 submersible pump has been selected and is capable of pumping up to 50 gpm at 300 feet of TDH. The total dynamic head calculation is included in Appendix VIII.

4.2 Cartridge Filtration System

The cartridge filtration system will consist of two filter housings equipped with cartridge filters. The primary and secondary filters will be Harmsco MUNI-3-4L-304 positioned in series. The primary filter housing is rated for a maximum flow rate of 450 gpm and will include a 5-micron cartridge filter (HC/170-5). The second housing is also rated for a maximum of 300 gpm when equipped with a LT2 cartridge filter (HC/170-LT2). Therefore, the filtration system can adequately treat the peak well output of 113 gpm from Well 1, Well 3 and Well 6A (based on the yield test) and 165 gpm, which is the combined peak output of the submersible well pumps. Pressure gauges and sample ports will be positioned at pre-filter, mid-filter and post-filter locations to allow monitoring of differential pressure and collection of water samples (if necessary) at each stage of the filtration process. The specified filter housings and the cartridges are NSF 61 approved. Manufacturer's information sheets are included as Appendix IX.

4.3 Ultraviolet Light Disinfection System

The UV system will include two multi-lamp, medium pressure UV units that are manufactured by Evoqua, Model WF-225-8 and work in conjunction with a continuous turbidity meter and a motorized butterfly valve positioned downstream of each UV unit. The UV dose for the unit is 40 mJ/cm^2 (millijoule per square centimeter) at the end of the lamp life and each UV unit is has been validated for drinking water per USEPA UVDGM and NSF 61 certification. The lamps are rated for 9,000 hours of operation when operating continuously, the maximum flow rate through the unit is 275 gpm and the maximum pressure rating of the unit 150 psi (pounds per square inch). Two UV units have been selected for use to provide redundancy in the treatment process.

When the submersible well pump is not operating, each UV unit will be off and each motorized butterfly valve will be closed. When the supervisory control and data acquisition system (SCADA) calls for water from Well 1, Well 3 or Well 6A, one of the UV units will activate and the "3-minute warm up" period will be initiated. After the 3-minute warm up, the motorized butterfly valve that is in line with the UV unit will open and allow groundwater to flow through the UV unit. Each UV unit is equipped with a UV sensor that monitors the lamps performance which is impacted by lamp intensity, quartz fouling and water transmittance. The monitor will also assess the system performance and when to change the lamps. In the event of any service issues that would affect the water treatment, the motorized butterfly valve will close and the submersible well pump will be deactivated. In addition, an audible and visible alarm will be connected to the UV unit and will be activated in the event the UV unit fails or the UV dose drops below 40 mJ/cm2.

The UV disinfection system will be connected to the flow meter to automatically adjust the power used by the UV system. The UV system is designed to minimize power while maintaining dose and the delivered dose uses the flow input along with lamp intensity to automatically adjust the power used. The manufacture's information sheets and validation report are included in Appendix X.

4.4 Disinfection

One flow paced chemical metering pump for each submersible well pump will be used to inject sodium hypochlorite into the raw water from Well 1, Well 3 and Well 6A. Each flow paced chemical metering pump will be interlocked with the operation of the submersible pump and will activate when the submersible well activates. The chemical metering pump for Well 1 and Well 3 (Stenner Model 85MHP5) has the capacity to inject a maximum of 5 gpd (gallons per day) of the diluted sodium hypochlorite solution against 100 psi. The chemical metering pump for Well 6A (Stenner Model 45MHP10) has the capacity to inject a maximum of 5 gpd of the diluted sodium hypochlorite solution against 100 psi. This solution will come from a 55-gallon storage tank positioned within the treatment building. The chemical metering pump for Well 1, Well 3 and Well 6A will be configured to inject a diluted 12.5% sodium hypochlorite solution into the raw water pipe leading to the oversized contact pipe when the submersible well pumps activate and the output of the chemical metering pump will automatically adjust to the recorded flow rate. The sodium hypochlorite solution that will be used for disinfection of the water supply will be stored in a 55-gallon polyethylene covered storage tank and the solution will be created by mixing 10 gallons of 12.5% sodium hypochlorite solution and 44 gallons of raw water. The injection rate for each metering pump has been calculated to maintain a chlorine residual of 1.0 ppm (parts per million) in the water leaving the oversized water main. The injection dial for the metering pumps for Well 1, Well 3 and Well 6A will set to operate at 6.2, 6.2 and 4.0, respectively (based on a scale of 0 to 10) to inject 3.1 gpd, 3.1 gpd and 4.0 gpd, respectively, of the sodium hypochlorite solution. The calculations supporting the settings of the injection pumps are included as Appendix XI.

The disinfection system is designed to provide a minimum of four-log virus inactivation in accordance with the United States Environmental Protection Agency (USEPA) Groundwater Rule. The necessary contact time is met through the travel time in the 82 feet of 24-inch C905 PVC pipe located between the atmospheric storage tank and the treatment building. Using the storage volume in the 24-inch diameter pipe, a contact time of 13.5 minutes was calculated based on the combined pumping rate from the submersible well pumps (165 gpm). The disinfection CT is the product of the residual disinfection concentration (C) and the corresponding disinfectant contact time (T). Based on the USEPA guidance, 4-log virus inactivation can be achieved with a minimum CT of 8 mg-min/l (milligram minutes per liter). Using 82 feet of 24-inch C905 pipe to provide contact time, and a minimum residual chlorine concentration of 0.6 mg/l, a CT of 8.09 mg-min/l will be achieved and the required minimum CT of 8 mg-min/l will be met. As noted above, the settings for the metering pumps have been determined to achieve a chlorine concentration of 1.0 mg-min/l at the treatment building and thereby ensure that the 0.6 mg-min/l design residual chlorine concentration will be obtained at the compliance point. The calculations supporting the concentration, time and size of this pipe are included as Appendix XII. In addition, the specification for the C905 piping is included in Appendix XII.

4.5 TRANSFER PUMPS

The total average daily demand for the development was determined to be 40,903 gpd and transfer pumps will be used to convey treated water from the treatment building to the proposed development. Based on general guidance from the Department of Health, the capacity of the transfer pumps for the proposed facility is determined by multiplying the estimated average daily demand by 10, and then converting the result to gallons per minute. Utilizing 40,903 gpd for the average daily demand of the proposed facility, the resulting transfer pump capacity is 284 gpm (40,903 x 10 / 1,440). The proposed pumping system for the domestic supply for the development will consist of three transfer pumps of equal capacity that will each have the capability of pumping 142 gpm at the calculated design pressure to equal the total capacity that is needed. The first-floor elevation of the highest point in the distribution system is at an elevation of 650.90 ft msl and the elevation at the highest point served in the distribution system is assumed to be 30 feet above the first-floor elevation (three-story structures), or 680.90 ft msl. The elevation at the lowest point in the distribution system is the water treatment building at approximately 562 ft msl, the elevation of the suction for the transfer pump is 564 ft msl and the ground floor elevation of the lowest structure would be at 633 ft msl. This configuration results in a maximum elevation difference of approximately 117 feet (50 psi) from the transfer pump suction to the high point in the distribution system. Friction losses associated with pumping the water to the furthest point in the distribution system are estimated to be approximately 4 feet. The minimum pressure at the highest point in the distribution system will be 35 psi (81 feet) and a 10% safety factor (20 feet) has been included which results in an approximate TDH of 222 feet. Three Goulds Model 33SV-3/2 pumps rated (rated for 140 gpm at 230 feet TDH) with 15-HP motors and equipped with variable frequency drives (VFD) have been chosen for this application. The three 33SV-3/2 pumps were sized to provide 142 against 222 feet. The manufacturer's information sheets and the pump curve are included as Appendix VI and the total dynamic head calculation is included as Appendix XIII. The proposed transfer pumps were also evaluated to determine the ability of multiple pumps being operated to meet the peak hour demand. The peak hour demand was estimated by multiplying the estimated average daily demand by 1/3, and then converting the result to gallons per minute. Utilizing 40,903 gpd for the average daily demand of the proposed facility, the resulting peak hour demand is 227 gpm (40,903 x 1/3 / 60). Friction losses associated with pumping 227 gpm to the furthest point in the distribution system are estimated to be approximately 3 feet. The minimum pressure at the highest point in the distribution system will be 35 psi (81 feet) and a 10% safety factor (20 feet) has been included which results in an approximate TDH of 221 feet. Based on the pump curve, each Goulds Model 33SV-3/2 would be operating at approximately 142 gpm, which allow for one of the three transfer pumps to be out of service.

The transfer pumping system was also designed to provide the fire flow for the development. The fire flow requirement was determined based on National Fire Prevention Association (NFPA) 1 2018 Fire Code, Section 18.4.5.1, "One and Two-Family Dwellings Not Exceeding 5,000 square feet". Based on this section of the NFPA 1 Code, the fire flow requirement is 1,000 gpm for 60 minutes, or 60,000 gallons. Two high-capacity transfer pumps (high flow) were selected to meet the fire flow demand exclusive of the output of the domestic transfer pumps at a minimum pressure of 20 psi at the highpoint of the distribution system. The TDH for the fire protection transfer pumps was calculated to be 225 feet and the calculation is included in Appendix VII. Two Goulds Model 125SV-4/3B pumps (rated for 730 gpm @ 225 ft TDH) were selected and include a 50-HP motors that will be equipped VFDs have been chosen for this application. The manufacturer's product information sheets and pump curve are included in Appendix XIV.

The domestic and high-capacity pumps were selected, in part, to allow for redundancy. If one of the domestic pumps is out of service, the remining two domestic pumps can activate to meet the domestic demand. If one of the high-capacity pumps is out of service, the combination of two domestic pumps and the single high-capacity pumps can be utilized to meet the requirement of 1,000 gpm.

4.5.1 Atmospheric Storage Tank

One above-grade 105,000-gallon glass-lined atmospheric storage tank was designed to approximate the average daily demand plus the volume of water need for fire protection. The atmospheric storage tank will be positioned in the area of the proposed treatment building.

One above-grade 105,000-gallon atmospheric storage tank that are 31 feet in diameter and 26 feet tall will be utilized and the volume has been designed to approximate the average daily demand of 40,903 gpd plus 60,000 gallons for fire protection. The above-grade 105,000-gallon atmospheric storage tank will be steel-bolted glass-lined storage tanks.

5.0 METHOD OF OPERATIONS AND CONTROLS

The control panel for the water-system equipment will be located within the proposed treatment building. Each submersible well pump will have a selector switch that has both manual and automatic modes of operation. When the switch is set in the manual mode, it will override all automatic operational sensors. When the switch is set to operate in the automatic mode, the well pumps will operate in accordance with the level sensor (pressure transducer) located in the 105,000-gallon atmospheric storage tank. The pressure transducer will be hardwired to the control panel for the submersible well pump.

Under normal operating conditions, one submersible well pump will activate when the low-level setting on the pressure transducer in one of the 105,000-gallon atmospheric storage tank is activated. If the water level in the 105,000-gallons atmospheric storage tank continues to decline a second well pump will activate and if the water level continues to decline, the third well pump will activate. The well pumps will continue to operate until the high-level setting on the pressure transducer is activated; thereby triggering the well pumps to deactivate and the lead pump will alternate.

Under normal operating conditions, the pressure measured at the hydropneumatic storage tank within the treatment building will be maintained at 85 psi (196 feet). If one transfer pump is unable to meet the demand from the water system, a second transfer pump will be activated, and additional transfer pumps will be activated as needed to maintain this pressure. In addition, the lead pump will alternate with each call for activation to allow for each transfer pump to operate. If the domestic pumps are unable to maintain the constant pressure, one or both of the high flow pumps will activate to maintain the constant pressure. Backup power will be provided for the water supply and treatment system and the backup generator will be specified by others and it will have the capability of powering all pumping equipment, treatment equipment, heating and ventilation, and lighting.

cmm
August 22, 2022
H:\Brynwood\2022\Summit Club_Engineer's Rpt\Eng. Rpt_Water-Supply System_Draft.doc

APPENDIX I

Westchestergov.com

Westchester County Department Health
Bureau of Environmental Quality

WELL COMPLETION REPORT: Well #1

WCDH File No.

This report is to be completed by well driller and submitted to Health Department, together with laboratory report of analysis of water sample indicating water is of satisfactory bacterial quality, before certificate of construction compliance is issued.

Well construction to be in accordance with Westchester County Health Dept, Rules & Regulations for the Design and Construction of Residential Subsurface Sewage Treatment System and Drilled Wells in Westchester County, NY.

Located at: 568 Bedford Rd Section: Block:
Well Location Municipality: N. Castle Lot:
Owner Last Name: Brynwood Owner First Name: C.C.
St. # 568 Street Name: Rte 22 Municipality: Armonk State: NY Zip Code: 10504
Well Driller (WD) Company Name:

Well Pit and Pump Equipment: Pitless Adapter: Other – Describe
Pump Make: Pump Type: Pump Capacity: Pump GPM:
Storage Tank Type: Storage Tank Capacity:

Well Details:
Casing Length: 51 Ft. Yield Test Type: Air
Casing Diameter 6 in. Yield Test Duration: 6 Hrs.
Casing Material: Steel Well Yield: 75 G.P.M.
Measured from Land
Water Level, Static: 0 Ft.
Water Level, Pumped: 500 Ft.
Screen Make: Screen Diameter: Inches
Screen Length: Ft. Screen Slot Size: **TOTAL WELL DEPTH :** 575 Ft.

WELL LOG :

Depth From Ground Surface	Give description of formation penetrated, such as: peat, silt, sand, gravel, clay, hardpan, shale, sandstone, granite, etc. Include size of gravel (diameter) and sand (fine, medium, coarse), color of material, structure (loose, packed, cemented, soft, hard). For example: 0 ft. to 27 ft. fine, packed, yellow sand; 27 ft. to 134 ft. gray granite.

0 Ft. to 17 Ft. Well Geology, 1st Strata : Hardpan & Clay
17 Ft. to 575 Ft. Well Geology, 2nd Strata: Gray Granite
Ft. to Ft. Well Geology, 3rd Strata :
Ft. to Ft. Well Geology, 4th Strata :
Ft. to Ft. Well Geology, 5th Strata :

I certify that the individual water supply indicated above was installed as per the Westchester County Health Department Rules & Regulations for the Design and Construction of Residential Subsurface Sewage Treatment System and Drilled Wells in Westchester County, NY.

Date Well Was Completed: 4/25/13 Date of Signature 5/29/13
NYSDEC Registration #: 10318 Well Driller Signature :

Revised 1/18/08

Westchester County Department Health

Bureau of Environmental Quality

WELL COMPLETION REPORT: Well #2B

WCDH File No.

This report is to be completed by well driller and submitted to Health Department, together with laboratory report of analysis of water sample indicating water is of satisfactory bacterial quality, before certificate of construction compliance is issued.

Well construction to be in accordance with Westchester County Health Dept, Rules & Regulations for the Design and Construction of Residential Subsurface Sewage Treatment System and Drilled Wells in Westchester County, NY.

Located at: 568 Bedford Rd
Section:
Block:
Well Location Municipality: N. Castle
Lot:
Owner Last Name: Brynwood
Owner First Name: C.C.
St. # 568 Street Name: Rte 22 Municipality: Armonk State: NY Zip Code: 10504
Well Driller (WD) Company Name:

Well Pit and Pump Equipment: Pitless Adapter: Other – Describe

Pump Make: Pump Type: Pump Capacity: Pump GPM:
Storage Tank Type: Storage Tank Capacity:

Well Details:

Casing Length: 100 Ft.
Yield Test Type: Air
Measured from Land
Casing Diameter 6 in.
Yield Test Duration: 6 Hrs.
Water Level, Static: 0 Ft.
Casing Material: Steel
Well Yield: 20 G.P.M.
Water Level, Pumped: 500 Ft.
Screen Make:
Screen Diameter: Inches
Screen Length: Ft.
Screen Slot Size:
TOTAL WELL DEPTH : 545 Ft.

WELL LOG :

Depth From Ground Surface	Give description of formation penetrated, such as: peat, silt, sand, gravel, clay, hardpan, shale, sandstone, granite, etc. Include size of gravel (diameter) and sand (fine, medium, coarse), color of material, structure (loose, packed, cemented, soft, hard). For example: 0 ft. to 27 ft. fine, packed, yellow sand; 27 ft. to 134 ft. grey granite.
0 Ft. to 37 Ft.	Well Geology, 1st Strata : Hardpan + Water
37 Ft. to 88 Ft.	Well Geology, 2nd Strata: Soft Caving Rock
88 Ft. to 545 Ft.	Well Geology, 3rd Strata : Gray Granite
Ft. to Ft.	Well Geology, 4th Strata :
Ft. to Ft.	Well Geology, 5th Strata :

I certify that the individual water supply indicated above was installed as per the Westchester County Health Department Rules & Regulations for the Design and Construction of Residential Subsurface Sewage Treatment System and Drilled Wells in Westchester County, NY.

Date Well Was Completed: 4/23/13
Date of Signature 5/29/13
NYSDEC Registration #: 10318
Well Driller Signature :

Revised 1/18/08

Westchestergov.com

Westchester County Department Health
Bureau of Environmental Quality

WELL COMPLETION REPORT: Well #3

WCDH File No.:

This report is to be completed by well driller and submitted to Health Department, together with laboratory report of analysis of water sample indicating water is of satisfactory bacterial quality, before certificate of construction compliance is issued.

Well construction to be in accordance with Westchester County Health Dept, Rules & Regulations for the Design and Construction of Residential Subsurface Sewage Treatment System and Drilled Wells in Westchester County, NY.

Located at: 568 Bedford Rd
Section:
Block:
Well Location Municipality: N. Castle
Lot:
Owner Last Name: Brynwood
Owner First Name: C.C.
St. #: 568
Street Name: Rte 22
Municipality: Armonk
State: NY
Zip Code: 10504
Well Driller (WD) Company Name:

Well Pit and Pump Equipment:
Pitless Adapter:
Other – Describe:
Pump Make:
Pump Type:
Pump Capacity:
Pump GPM:
Storage Tank Type:
Storage Tank Capacity:

Well Details:
Casing Length: 61 Ft.
Yield Test Type: Air
Casing Diameter: 6 In.
Yield Test Duration: 6 Hrs.
Casing Material: Steel
Well Yield: 40 G.P.M.

Measured from Land
Water Level, Static: 0 Ft.
Water Level, Pumped: 600 Ft.

Screen Make:
Screen Diameter: Inches
Screen Length: Ft.
Screen Slot Size:
TOTAL WELL DEPTH : 645 Ft.

WELL LOG :

Depth From Ground Surface	Give description of formation penetrated, such as: peat, silt, sand, gravel, clay, hardpan, shale, sandstone, granite, etc. Include size of gravel (diameter) and sand (fine, medium, coarse), color of material, structure (loose, packed, cemented, soft, hard). For example: 0 ft. to 27 ft. fine, packed, yellow sand; 27 ft. to 134 ft. gray granite.

0 Ft. to 27 Ft. Well Geology, 1st Strata : Hardpan + Clay
27 Ft. to 645 Ft. Well Geology, 2nd Strata: Gray Granite
Ft. to Ft. Well Geology, 3rd Strata :
Ft. to Ft. Well Geology, 4th Strata :
Ft. to Ft. Well Geology, 5th Strata :

I certify that the individual water supply indicated above was installed as per the Westchester County Health Department Rules & Regulations for the Design and Construction of Residential Subsurface Sewage Treatment System and Drilled Wells in Westchester County, NY.

Date Well Was Completed: 1/30/13
Date of Signature: 5/29/13
NYSDEC Registration #: 10318
Well Driller Signature :

Revised 1/18/06

Westchestergov.com

Westchester County Department Health

Bureau of Environmental Quality

WELL COMPLETION REPORT: Well #4

WCDH File No.

This report is to be completed by well driller and submitted to Health Department, together with laboratory report of analysis of water sample indicating water is of satisfactory bacterial quality, before certificate of construction compliance is issued.

Well construction to be in accordance with Westchester County Health Dept, Rules & Regulations for the Design and Construction of Residential Subsurface Sewage Treatment System and Drilled Wells in Westchester County, NY

Located at: 568 Bedford RD Section: Block:

Well Location Municipality: N. CASTLe Lot:

Owner Last Name: BRYNWOOD Owner First Name: C.C.

St. #: 568 Street Name: RTE 22 Municipality: ARMONK State: NY Zip Code: 10504

Well Driller (WD) Company Name:

Well Pit and Pump Equipment: Pitless Adapter: Other – Describe

Pump Make: Pump Type: Pump Capacity: Pump GPM:

Storage Tank Type: Storage Tank Capacity:

Well Details:

Casing Length: 61 Ft. Yield Test Type: Air

Casing Diameter 6 In. Yield Test Duration: 6 Hrs.

Casing Material: Steel Well Yield: 7 G.P.M.

Measured from Land

Water Level, Static: 0 Ft.

Water Level, Pumped: 500 Ft.

Screen Make: Screen Diameter: Inches

Screen Length: Ft. Screen Slot Size:

TOTAL WELL DEPTH : 545 Ft.

WELL LOG :

Depth From Ground Surface	Give description of formation penetrated, such as: peat, silt, sand, gravel, clay, hardpan, shale, sandstone, granite, etc. Include size of gravel (diameter) and sand (fine, medium, coarse), color of material, structure (loose, packed, cemented, soft, hard). For example: 0 ft. to 27 ft. fine, packed, yellow sand; 27 ft. to 134 ft. grey granite.

0 Ft. to 4 Ft. Well Geology, 1st Strata : HARDPAN

4 Ft. to 545 Ft. Well Geology, 2nd Strata: GRAY GRANITE

Ft. to Ft. Well Geology, 3rd Strata :

Ft. to Ft. Well Geology, 4th Strata :

Ft. to Ft. Well Geology, 5th Strata :

I certify that the individual water supply indicated above was installed as per the Westchester County Health Department Rules & Regulations for the Design and Construction of Residential Subsurface Sewage Treatment System and Drilled Wells in Westchester County, NY.

Date Well Was Completed: 2/1/13 Date of Signature 5/29/13

NYSDEC Registration #: 10318 Well Driller Signature :

Revised 1/18/08

Westchestergov.com

Westchester County Department Health

Bureau of Environmental Quality

WELL COMPLETION REPORT: Well # 5

WCDH File No.

This report is to be completed by well driller and submitted to Health Department, together with laboratory report of analysis of water sample indicating water is of satisfactory bacterial quality, before certificate of construction compliance is issued.

Well construction to be in accordance with Westchester County Health Dept, Rules & Regulations for the Design and Construction of Residential Subsurface Sewage Treatment System and Drilled Wells in Westchester County, NY.

Located at: 568 Bedford RD

Section:

Block:

Well Location Municipality: N. CASTLE

Lot:

Owner Last Name: BRYNWOOD

Owner First Name: C. C.

St. # 568

Street Name: RR 22

Municipality: ARMONK

State: NY.

Zip Code: 10504

Well Driller (WD) Company Name:

Well Pit and Pump Equipment:

Pitless Adapter:

Other – Describe

Pump Make:

Pump Type:

Pump Capacity:

Pump GPM:

Storage Tank Type:

Storage Tank Capacity:

Well Details:

Casing Length: 61 Ft.

Yield Test Type: Air

Measured from Land

Casing Diameter: 6 In.

Yield Test Duration: 6 Hrs.

Water Level, Static: 8 Ft.

Casing Material: Steel

Well Yield: 25 G.P.M.

Water Level, Pumped: 500 Ft.

Screen Make:

Screen Diameter: Inches

Screen Length: Ft.

Screen Slot Size:

TOTAL WELL DEPTH : 540 Ft.

WELL LOG :

Depth From Ground Surface	Give description of formation penetrated, such as: peat, silt, sand, gravel, clay, hardpan, shale, sandstone, granite, etc. Include size of gravel (diameter) and sand (fine, medium, coarse), color of material, structure (loose, packed, cemented, soft, hard). For example: 0 ft. to 27 ft. fine, packed, yellow sand; 27 ft. to 134 ft. gray granite.

0 Ft. to 7 Ft. Well Geology, 1st Strata : HArdpAN

7 Ft. to 540 Ft. Well Geology, 2nd Strata: GrAy GrANITE

Ft. to Ft. Well Geology, 3rd Strata :

Ft. to Ft. Well Geology, 4th Strata :

Ft. to Ft. Well Geology, 5th Strata :

I certify that the individual water supply indicated above was installed as per the Westchester County Health Department Rules & Regulations for the Design and Construction of Residential Subsurface Sewage Treatment System and Drilled Wells in Westchester County, NY.

Date Well Was Completed: 8 6 13

Date of Signature 5/29/13

NYSDEC Registration #: 10318

Well Driller Signature :

Revised 1/18/02

Westchestergov.com

Westchester County Department Health

Bureau of Environmental Quality

WELL COMPLETION REPORT: WELL # 6A

WCDH File No. ☐

This report is to be completed by well driller and submitted to Health Department, together with laboratory report of analysis of water sample indicating water is of satisfactory bacterial quality, before certificate of construction compliance is issued.

Well construction to be in accordance with Westchester County Health Dept, Rules & Regulations for the Design and Construction of Residential Subsurface Sewage Treatment System and Drilled Wells in Westchester County, NY.

Located at: 568 Bedford RD
Section:
Block:
Well Location Municipality: N. Castle
Lot:
Owner Last Name: BryNwood
Owner First Name: C.C.
St. # 568 Street Name: Rte 22 Municipality: Armonk State: NY Zip Code: 10504
Well Driller (WD) Company Name:

Well Fit and Pump Equipment: Pitless Adapter: Other – Describe
Pump Make: Pump Type: Pump Capacity: Pump GPM:
Storage Tank Type: Storage Tank Capacity:

Well Details:

Casing Length: 61 Ft.
Yield Test Type: Air
Measured from Land
Casing Diameter: 6 In.
Yield Test Duration: 6 Hrs.
Water Level, Static: 0 Ft.
Casing Material: Steel
Well Yield: 30 G.P.M.
Water Level, Pumped: 600 Ft.
Screen Make:
Screen Diameter: Inches
Screen Length: Ft.
Screen Slot Size:
TOTAL WELL DEPTH : Ft.

WELL LOG :

Depth From Ground Surface	Give description of formation penetrated, such as: peat, silt, sand, gravel, clay, hardpan, shale, sandstone, granite, etc. Include size of gravel (diameter) and sand (fine, medium, coarse), color of material, structure (loose, packed, cemented, soft, hard). For example: 0 ft. to 27 ft. fine, packed, yellow sand; 27 ft. to 134 ft. gray granite.
0 Ft. to 26 Ft.	Well Geology, 1st Strata : Hardpan & Clay
26 Ft. to 625 Ft.	Well Geology, 2nd Strata: Gray Granite
Ft. to Ft.	Well Geology, 3rd Strata :
Ft. to Ft.	Well Geology, 4th Strata :
Ft. to Ft.	Well Geology, 5th Strata :

I certify that the individual water supply indicated above was installed as per the Westchester County Health Department Rules & Regulations for the Design and Construction of Residential Subsurface Sewage Treatment System and Drilled Wells in Westchester County, NY.

Date Well Was Completed: 5/13/13
Date of Signature 5/29/13
NYSDEC Registration #: 10318
Well Driller Signature :

Revised 1/18/08

APPENDIX II

INADVERTENT RETURNS CONTINGENCY PLAN FOR HORIZONTAL DIRECTIONAL DRILLING

1.0 INTRODUCTION AND PURPOSE

Horizontal directional bore operations have a potential to release drilling fluids into the surface environment through inadvertent returns (an inadvertent return is the condition where drilling mud is released through fractured soil into the surrounding formation and travels toward the surface). Because drilling muds consist of a bentonite clay-water mixture, they are not classified as toxic or hazardous substances. Prior to the start of horizontal drilling, the contractor’s field supervisor shall document existing conditions in the work area and surrounding area to establish baseline conditions.

While drilling fluid seepage associated with an inadvertent return is most likely to occur near the bore entry and exit points where the drill head is shallow, inadvertent returns can occur at any location along a directional bore. This Inadvertent Returns Contingency Plan (IRCP) establishes operational procedures and responsibilities for the prevention, containment, and cleanup of inadvertent returns associated with the proposed directional drilling project. All personnel and sub-contractors responsible for the work must adhere to this plan during the directional drilling process.

The specific objectives of this plan are to:

1. Minimize the potential for inadvertent returns associated with horizontal directional drilling activities;
2. Provide for the timely detection of inadvertent returns;
3. Protect areas that are considered environmentally sensitive (streams, wetlands, other biological sources, cultural resources)
4. Ensure an organized, timely, and "minimum-impact" response in the event of inadvertent returns and release of drilling bentonite; and
5. Ensure that all notifications are made to the appropriate parties at the Summit Club (Summit) and their representatives immediately and to appropriate regulatory agencies within 24 hours and that documentation is completed.

2.0 DESCRIPTION OF WORK- SUMMARY

The project will entail horizontal directional drilling (HDD) from the area where the proposed treatment building will be located to the general area where the wells are located. A raw water main will be installed and connected to Well 1, Well 3 and Well 6A.

The project has been designed, and is proposed to be constructed, such that there will be limited disturbance to the property. To minimize site disturbance, the Summit proposes to use the HDD method of pipeline installation to install the raw water transmission line and electrical conduit a minimum of 10 feet below land surface and below the wetland and surface water bodies. This depth will be maintained except at the entry pit and the exist pit where the minimum depth of the raw water transmission lies will be 4 feet below land surface. HDD is recognized as the least environmentally disturbing construction technique available for installing pipelines. The primary alternative to HDD would be trenching.

HDD uses drilling fluid to facilitate the drilling of the bore hole (initial hole), and installation of the lines. The fluid also serves to stabilize the surrounding formations and provides a seal that reduces the risk of inadvertent returns.

To prevent or mitigate potential impacts from inadvertent returns, drilling operations will be halted by the drill rig operators immediately upon detection of a drop in drilling pressure or other evidence of inadvertent returns. The clean-up of all spills shall begin immediately. Summit shall be notified immediately of any spills and shall be consulted regarding clean-up procedures. A spill kit shall be onsite and used if inadvertent returns occurs. A vacuum trailer and containment materials, such as straw bales, shall also be on-site prior to and during all operations. In the event of an inadvertent returns, the on-site foreman/supervisor will conduct an evaluation of the situation and direct recommended mitigation actions, based on the following guidelines:

a. If the inadvertent return is minor, easily contained, or has not reached the surface and is not an immediate threat to nearby sensitive resources, drilling operations may resume after use of a leak-stopping compound or redirection of the bore;

b. If the inadvertent return has reached the surface, any material contaminated with bentonite shall be removed by hand, contained and properly disposed of, as required by law. Summit shall be responsible for ensuring that the bentonite is either properly disposed of at an approved disposal facility or properly recycled in an approved manner. The Site Supervisor shall notify and take any necessary follow-up response actions in coordination with agency representatives. The Site Supervisor will coordinate the mobilization of equipment stored at offsite locations (e.g., vacuum trucks) on an as-needed basis.

3.0 SITE SUPERVISOR/FOREMAN RESPONSIBILITIES

The Site Supervisor/Foreman will have overall responsibility and the necessary knowledge/training for implementing this IRCP. The Site Supervisor/Foreman will ensure that all employees are trained prior to drilling activities. The Site Supervisor/Foreman shall notify Summit personnel immediately when an inadvertent return is detected. The Site Supervisor/Foreman will be responsible for ensuring that the safety department is aware of the inadvertent return, coordinating personnel, response, cleanup, regulatory agency notification and disposal of recovered material and timely reporting of the incident. The Site Supervisor/Foreman shall ensure all waste materials are properly containerized, labeled, and removed from the site to an approved disposal facility by personnel experienced in the removal, transport and disposal of drilling mud.

The Site Supervisor/Foreman shall be familiar with all aspects of the drilling activity, the contents of this IRCP and the conditions of approval under which the activity is permitted to take place. The Site Supervisor/Foreman shall have the authority to stop work and commit the resources (personnel and equipment) necessary to implement this plan. The Site Supervisor/Foreman shall ensure that a copy of this plan is available onsite and accessible to all construction personnel. The Site Supervisor/Foreman shall ensure that all workers are properly trained and familiar with the necessary procedures for response to an inadvertent return, prior to commencement of drilling operations.

3.1 <u>Design Engineer Observation</u>

WSP engineering staff will provide full-time observation during the horizontal drilling work.

4.0 EQUIPMENT

The Contractor, including the Site Supervisor shall ensure that:

- All equipment and vehicles are inspected and maintained daily;
- Spill kits and spill containment materials are available onsite at all times and that the equipment is in good working order;
- Equipment required to contain and clean up an inadvertent returns release will be available at the work site;
- A vacuum trailer shall be staged at a location from which it can be mobilized and relocated so that any place along the drill pathway, can be reached by the apparatus in a timely manner; and
- Construction personnel shall have appropriate operational communication onsite at all times during construction.

5.0 TRAINING

Prior to the start of construction, the Site Supervisor/Foreman, shall ensure that the crew members receive training in the following:

- The provisions of the IRCP, equipment maintenance and site-specific permit and monitoring requirements;
- Inspection procedures for release prevention and containment with the available equipment and materials;
- Contractor/crew obligation to immediately stop the drilling operation upon first evidence of the occurrence of an inadvertent return and to immediately report any inadvertent returns release to the Site Supervisor/Foreman;
- Contractor/crew member responsibilities in the event of a release;
- Operation of release prevention and control equipment and the location of release control materials, as necessary and appropriate; and
- Protocols for communication with agency representatives who might be onsite during the clean-up effort. List of contact names, phone numbers and lines of authority and notifications shall be kept onsite.

6.0 DRILLING AND RESPONSE PROCEDURES

The following procedures shall be followed each day, prior to, and during the drilling process:

- The IRCP shall be available onsite during all construction.
- The Site Supervisor/Foreman shall be on-site at any time that drilling is occurring.
- The Site Supervisor/Foreman shall ensure that a job briefing meeting is held at the start of each day of drilling to review the appropriate procedures to be followed in case of an inadvertent return. Questions shall be answered and clarification given on any point over which the drilling crew or other project staff has concerns.
- The Site Supervisor/Foreman will be responsible as full-time monitor of observable inadvertent returns conditions or lowered pressure readings on the drilling equipment.

Drilling pressures shall be closely monitored so they do not exceed those needed to penetrate the formation. Pressure levels shall be monitored constantly by the operator. Maximum pressure levels shall be set at a level to prevent inadvertent returns.

6.1 Precautions

A site inspection will be conducted of the drilling entry and exit areas, surrounding work areas, and the drilling route on the surface for familiarization purposes.

Where present, sensitive cultural and biological resources will be flagged for avoidance or construction limits will be clearly marked. Barriers (straw bales or sedimentation fences) will be erected between the bore site and nearby sensitive resources prior to drilling, as appropriate, to prevent released material from reaching the resource. The silt fence and haybale locations and details are provided on the attached plans.

Exit and entry pits shall be clearly marked, and surrounded by construction fencing, silt fencing and straw barriers to minimize the potential for migration of bentonite. Excavation at all entry points will receive full-time monitoring. Early detection is key to minimizing the potential of an inadvertent return.

Access and egress locations will be designated and clearly marked. A spill kit shall be onsite and used if an inadvertent return occurs. A vacuum truck shall be readily available prior to and during all drilling operations. Containment materials (straw, silt fencing, sand bags, inadvertent returns spill kits, etc.) shall be staged onsite at a location where they are readily available and easily mobilized for immediate use in the event of an accidental release of drilling mud (inadvertent returns).

6.2 Field Response to Inadvertent returns Occurrence

Once the drill rig is in place, and drilling begins, the drill operator shall stop work whenever the pressure in the drill rig drops, or there is a lack of returns in the entrance pit. At this time, the Summit Site Supervisor/Foreman shall be informed of a potential inadvertent return. If a potential inadvertent return is confirmed, all work will stop. The Site Supervisor/Foreman and the drill rig operator(s) shall work to coordinate the likely location of the potential inadvertent returns. The location of the potential inadvertent return shall be recorded and notes made regarding the location and measures taken to address the concern.

Water containing mud, silt, bentonite from equipment washing or other activities, shall not be allowed to enter the wetland. The bentonite used in the drilling process shall be either disposed of at an approved disposal facility or recycled in an approved manner. Other construction materials and wastes shall be recycled, or disposed of, as appropriate.

The response of the field crew to an inadvertent returns release shall be immediate and in accordance with procedures identified in this Plan. All appropriate emergency actions that do not pose additional threats to sensitive resources will be taken, as follows:

a. Directional boring will stop immediately;
b. The drill pipe will be pulled back to relieve pressure on inadvertent returns;
c. Determine the location & extent of the inadvertent returns; the surface path of the crossing shall be inspected;

d. The Site Supervisor/Foreman will be notified to ensure that management and the safety department is notified, adequate response actions are taken and notifications made;
e. The Site Supervisor/Foreman shall evaluate the situation and recommend the type and level of response warranted, including the level of notification required;
f. If the inadvertent returns is minor, easily contained, has not reached the surface and is not threatening sensitive resources, a leak-stopping compound shall be used to block the inadvertent returns. If the use of leak-stopping compound is not fully successful, the bore stem shall be redirected to a new location along the desired drill path where an inadvertent returns has not occurred.

6.2.1 Inadvertent Release Response on Land

If a release of drilling mud occurs at a fracture on land:

- Isolate the area with coir logs (coconut fiber logs), hay bales, sand bags, and/or silt fencing to surround and contain the drilling mud.
- Consult with all parties to monitor for inadvertent returns regarding next appropriate action among the following:
    - A mobile vacuum truck will be used to pump the drilling mud from the contained area and recycled to the return pit.
    - The drilling mud will be left in place to avoid potential damage from vehicles entering the area; or
    - The usage of approved loss circulation materials will be added to the fluid mixture;
- Once excess drilling mud is removed, the area will be seeded and/or replanted using species similar to those in the adjacent area, or allowed to re-grow from existing vegetation.

6.2.2 Inadvertent Release Response in Water

If a release of drilling mud occurs at a fracture in water:

- Monitor the inadvertent return for four hours to determine if the drilling mud congeals. (Bentonite will usually harden, effectively sealing the inadvertent returns location).
- Consult with the environmental inspector to monitor for inadvertent returns regarding next appropriate action among the following:
    - If drilling mud congeals, take no other action that would potentially suspend sediments in the water column.
    - If drilling mud does not congeal, erect isolation/containment environment (underwater boom and curtain).
    - If the fracture becomes excessively large, call a spill response team in to contain and clean up excess drilling mud in the water. Maintain updated phone numbers of spill response teams in the area onsite.
    - If the spill affects an area that is vegetated, the area will be seeded and/or replanted using species similar to those in the adjacent area, or allowed to re-grow from existing vegetation.
- Revegetated areas will be monitored twice a year for the first year subsequent to inadvertent returns to confirm revegetation is successful.

6.3 Response Close-out Procedures

As discussed in Section 1.0, document existing conditions prior to beginning directional drilling. After an inadvertent return is stabilized and any required removal is completed, document post-cleanup conditions with photographs and prepare an inadvertent returns incident report describing time, place, actions taken to remediate inadvertent returns and measures implemented to prevent re-occurrence.

When the release has been contained and cleaned up, response closeout activities will be conducted at the direction of the Site Supervisor/Foreman and shall include the following:

a. The recovered drilling fluid will either be recycled or hauled to an approved facility for disposal. No recovered drilling fluids will be discharged to land surface or into streams, storm drains or any other water source;
b. All inadvertent returns excavation and clean-up sites will be returned to pre-project contours using clean fill, as necessary; and
c. All containment measures (fiber rolls, straw bale, etc.) will be removed, unless otherwise specified by the Site Supervisor/Foreman.

6.4 Construction Re-Start

For small releases not requiring external notification, drilling may continue (following Summit's approval), if 100-percent containment is achieved through the use of a leak-stopping compound or redirection of the bore and the clean-up crew remains at the inadvertent returns location throughout the construction period.

For releases requiring external notification and/or other agencies, construction activities will not restart without prior approval from all required parties.

6.5 Bore Abandonment

Abandonment of the bore will only be required when all efforts to control the inadvertent return within the existing directional bore have failed. As part of the evaluation to abandon the borehole, Summit, and NYSDEC shall be notified of the situation and shall contribute to the decision-making process to determine whether the borehole should be abandoned or not.

7.0 NOTIFICATION

In the event of an inadvertent return that reaches a water source, the Site Supervisor/Foreman will notify the key project personnel in the Emergency Contact List provided as Attachment 1 of this appendix so they can notify the appropriate resources and/or agencies, as required. All agency notifications will occur within 24 hours of discovery of inadvertent returns and proper documentation will be accomplished in a timely and complete manner. The information supplied will include all items listed below:

- Date, location and time of release;
- Description of how the release occurred;
- An estimate of the amount of drilling mud released;
- Size of the area impacted;
- Name and telephone number of person reporting;

- The type of activity that was occurring around the area of the inadvertent returns;
- Description of any sensitive areas, and their location in relation to the inadvertent returns;
- Description of the methods used to clean up or secure the site;
- Success of the clean-up action; and
- A listing of the current permits obtained for the project.

8.0 DOCUMENTATION

Summit's Site Supervisor/Foreman shall record the inadvertent returns event in his or her daily log. The log will include all items listed in Section 7.0 above, along with photo documentation.

9.0 PROJECT COMPLETION AND CLEAN-UP

a. All materials and any rubbish-construction debris shall be removed from the construction zone at the end of each workday;
b. Sump pits at bore entry and exits will be filled and returned to natural grade; and
c. All protective measures (fiber rolls, straw bale, silt fence, etc.) will be removed unless otherwise specified by the Site Supervisor/Foremen.

THE SUMMIT CLUB
NORTH CASTLE, NEW YORK

EMERGENCY CONTACT LIST

1. Key Project Personnel:

Michael Shortell, WSP	(475) 882-1720 (office) (203) 767-0284 (cell, emergency)
2. WCDOH – Spill Reporting (notify within 2 hours for any size spill)	(914) 813-5000
3. NYSDEC – Spill Hotline (spill >= 5 gallons)	1-800-457-7362

Note: you do not need to notify NYSDEC if **all** of the following are true:

a) the spill is less than 5 gallons;
b) the spill is contained and under control;
c) the spill has not reached the land (unpaved areas) or surface water; and,
d) the spill is cleaned up within two hours of discovery.

4. National Response Center (notify if release enters surface water or stormwater catch basins)	1-800-424-8802
5. North Castle, NY Police & Fire Departments	911 (Emergency) (914) 273-9500 (Police) (914) 273-3292 (Fire)
7. New York State Police	911 (Emergency)
8. Northern Westchester Hospital	(914) 666-1254 (Emergency Services) (914) 666-1200 (General Information)
9. EPA – Region 2 Administrator	(212) 637-3660

APPENDIX III

72-HOUR PUMPING TEST REPORT

SUMMIT COUNTRY CLUB WELLS 1, 3 AND 6A

Summit Club
Town of North Castle
Westchester County, New York

PROJECT NO.: 31403576.002
DATE: AUGUST 2022

WSP USA INC.
4 RESEARCH DRIVE, SUITE 204
SHELTON, CT 06484

PHONE: +1 (203) 929-8555
FAX: +1 (203) 926-9140
wsp.com

SIGNATURES

PREPARED BY:

Stacy

Stacy Stieber, CPG, PG (NY)
Senior Lead Hydrogeologist

PREPARED BY:

Thomas P. Cusack, CPG, PG (NY)
Vice President

This report was prepared by WSP USA (WSP) for the account of Summit Club Manor, in accordance with the professional services agreement. The disclosure of any information contained in this report is the sole responsibility of the intended recipient. The material in it reflects WSP's best judgement in light of the information available to it at the time of preparation. Any use that a third party makes of this report, or any reliance on or decisions to be made based on it, are the responsibility of such third parties. WSP accepts no responsibility for damages, if any, suffered by any third party as a result of decisions made or actions based on this report. This limitations statement is considered part of this report.

TABLE OF CONTENTS

TABLES PAGE

FIGURES

APPENDICES

CD (at end of report)

Water-Level Data

1.0 INTRODUCTION

The following are the results of the combined 72-hour pumping test conducted on the Summit Country Club Wells 1, 3 and 6A by WSP USA Inc., and related company Hydrogeologic, Architecture, Land Surveying, Landscape Architecture Services, P.C. (WSP), in June 2022. The Summit Country Club is located at 568 Bedford Road in North Castle, New York (Figure 1). The pumping test was conducted at the recommendation of the Westchester County Department of Health (WCDH) to confirm that the yield capacity of the proposed residential potable supply wells could meet the current water demand needs of the proposed residential development on the project site. A Pumping Test Plan was prepared and submitted to the WCDH in January 2022. Comments were received from WCDH in February 2022 and a revised plan was prepared and resubmitted in March 2022. WCDH acknowledged and accepted the revised plan in an email dated March 10, 2022 (Appendix I).

A groundwater exploration program was conducted for the Summit Country Club (formerly Brynwood Golf & Country Club) in 2013 to develop an onsite potable water source that could meet the water demand of a proposed residential development on the project site. Bedrock well locations were selected on the property that meet the New York State Department of Health (NYSDOH) well siting requirement for community public water-supply wells. The proposed well locations were submitted to the WCDH for review and approval prior to drilling. Upon receipt of approval of the well locations from WCDH, the well drilling program was conducted and sufficient yields were encountered in several of the bedrock test wells to proceed with a pumping test program and water-quality sample analysis. Copies of the Well Completion Reports for Wells 1, 2B, 3, 4 and 5 drilled during the groundwater exploration program are included in Appendix II.

Wells 1, 3 and 6A were previously yield tested in May 2013. Following the completion of the groundwater exploration program, a 72-hour pumping test program was conducted on onsite bedrock Wells 1, 2B, 3, 5, 6A and Irrigation Wells 4 and 5 (Figure 2). Well 4 was not included as a pumping well in the 2013 pumping test program but was measured as an onsite monitoring well during the test period. Wells 1, 2B, 3, 5, Irrigation Well 4 and Irrigation Well 5 were pumped concurrently to demonstrate their combined yield capacity and to assess potential pumping-related drawdown effects in the aquifer. An individual 72-hour pumping test was conducted on Well 6A to demonstrate it as the best well (out of service) to meet the NYSDOH requirement of providing twice a project's average water demand with the best well out of service. The individual yields of Wells 1, 2B, 3, 5 and Irrigation Wells 4 and 5 from the simultaneous pumping test were 50 gpm (gallons per minute), 12 gpm, 32 gpm, 19.5 gpm, 32 gpm and 40 gpm, respectively, for a combined yield of 185.5 gpm. The yield of Well 6A from the individual pumping test conducted was 55 gpm. The report with the results of the May 2013 pumping test program has been previously submitted to the WCDH, New York State Department of Environmental Conservation (NYSDEC) and Town of North Castle.

After the completion of the 2013 well testing program, as SEQR Lead Agency, the Town of North Castle recommended that Summit Club evaluate connection of the proposed project to the Windmill Farms Water District #2. The Summit Club pursued additional groundwater exploration at the Windmill Farms well field to develop supplemental water to supply the proposed Summit Club development. However, the results of the groundwater exploration program at the Windmill Farms well field did not produce sufficient surplus capacity to meet the requirements of the proposed Summit Club project. Therefore, the Summit Club is now pursuing the use of their own onsite wells to meet their potable water-supply needs.

2.0 WATER DEMAND

The table below is a summary of the estimated potable water demand for the Summit Club project. This calculation was used to select the minimum target pumping rates for Wells 1, 3 and 6A during the June 2022 72-hour pumping test program. Per the comments received from WCDH, the non-residential water usages have been adjusted for hours of operation in the calculations and no 20% reduction for water-saving fixtures has been applied. The goal of the 72-hour pumping test was to demonstrate the wells could meet twice the projects maximum daily water demand with the best well out of service.

Table 1: Summit Club Potable Water Demand Calculation

Usage Type	Subcategory	Number	Water Usage Rate	Hour of Operation (hours)	Water Demand (gpd)	Water Demand (gpm)
Townhomes	--	198 bedrooms	110 gpd/bedroom	24	21,780	15.1
Guest Cottages	--	40 bedrooms	110 gpd/bedroom	24	4,400	3.1
Restaurant	--	252 seats	35 gpd/seat	18	11,025	7.7
Bar/Lounge	--	35 seats	20 gpd/seat	18	875	0.6
Country Club	Employees	20 employees	15 gpd/employee	18	375	0.3
	Pool	257 swimmers	10 gpd/swimmer	18	3,213	2.2
	Spa/Jacuzzi	24 patrons	10 gpd/swimmer	18	300	0.2
	Excess Pool Deck	170 swimmers	10 gpd/swimmer	18	2,125	1.5
Golf Rounds	--	144 rounds	20 gpd/round	18	3,600	2.5
Golf Course Maintenance Facility	Employees	15 employees	15 gpd/employee	18	281	0.2
	Seasonal Staff Dormitory Accommodations	12 staff	75 gpd/staff	24	900	0.6
Wastewater Treatment Plant Usage	--	--	55 gpd	24	55	0.0
Average Water Demand					48,929	34.0
Maximum Daily Demand					97,858	68.0

gpm	gallons per minute
gpd	gallons per day

3.0 JUNE 2022 72-HOUR PUMPING TEST PROGRAM

The combined 72-hour pumping test program on Wells 1, 3 and 6A was conducted between June 20 through 23, 2022. The three wells were pumped concurrently and the well pumps were started in a staggered manner with a minimum two hours between the start of each well pump. The pump in Well 6A was started first, followed by Well 1, and the pump in Well 3 was started last. The wells were pumped concurrently for a minimum of 72 hours following the start of the pump in the final well (Well 3).

During the 72-hour pumping test program, water-level measurements were collected from the onsite pumping Wells 1, 3, and 6A; onsite monitoring Wells 2B, 5, 9, 10, Irrigation Well 4, Irrigation Well 5, and former Irrigation Well 3; and 13 offsite wells located near the project site. The hydrographs, 180-day drawdown projection graphs and summary tables of water-level measurements collected from the pumping Wells 1, 3 and 6A are provided in Appendix III. The hydrographs and summary tables of water-level measurements collected from onsite monitoring wells are provided in Appendix IV and for the offsite monitoring wells are provided in Appendix V. The onsite and offsite well locations are shown on Figures 2 and 3. The raw water-level data collected from all locations are provided on the attached excel spreadsheet.

In addition to the wells, water-level measurements were collected from a piezometer location, PZ-1, installed near Wells 1 and 6A. The hydrographs and a table of the water-level measurements collected from the piezometer location is included in Appendix VI. The piezometer location is shown on Figure 2.

The water from Wells 1, 3 and 6A was discharged to waste during the pumping test. The discharge locations are shown on Figure 2. The locations were positioned downgradient of the onsite wells and surface-water monitoring location to prevent artificial recharge of the groundwater during the test period.

Daily precipitation was measured at the well field and monitored at other nearby weather stations. Daily precipitation measurements from a weather station in Armonk have been overlain on the hydrographs for reference. Daily precipitation totals from the station are also included on the table below.

Table 2: Daily Precipitation Totals

Date	Daily Precipitation (inches)
6/14/2022	0
6/15/2022	0
6/16/2022	0.18
6/17/2022	0.02
6/18/2022	0.03
6/19/2022	0
6/20/2022	0
6/21/2022	0
6/22/2022	0.11
6/23/2022	0.07
6/24/2022	0.15
6/25/2022	0
6/26/2022	0
6/27/2022	0.10

Total monthly precipitation for the Westchester County AP station and 30-year normal for the 12-month period prior to the pumping test in June 2022 are provided in the table below. In the months leading up to the June 2022 72-hour pumping test, with the exception of April 2022, precipitation has been below normal since November 2021.

Table 3: Monthly Precipitation and Precipitation Normal from 1991-2020

Date	Total Precipitation (inches)	Monthly Precipitation Normals (1991-2020) (inches)
July 2021	4.44	4.07
August 2021	4.54	4.36
September 2021	8.54	4.94
October 2021	5.99	4.33
November 2021	1.11	3.64
December 2021	1.11	4.18
January 2022	2.60	3.20
February 2022	2.58	2.53
March 2022	2.09	4.11
April 2022	5.91	4.20
May 2022	3.40	3.94
June 2022	3.72	4.25

Water samples were collected from Wells 1, 3 and 6A at the end of the 72-hour test for analysis for NYSDOH Sanitary Code Part 5, Subpart 5-1 parameters for community, public water-supply wells listed in Tables 8A, 8B, 8C, 8D, 9B, 9C (including the extras dioxin, endothall, diquat and glyphosate), 9D, 10A, 11A, 12, lead, copper, total coliform, perfluorinated compounds (18 compound list) and radon. Microscopic particulate analysis (MPA), giardia, cryptosporidium samples were also collected from Wells 1 and 6A during the test period because these wells are located within 200 feet of surface water. The laboratory reports for the Part 5 and MPA samples are included in Appendix VII. Measurements of pH, temperature and conductivity were also collected from the Wells 1 and 6A discharge water and the nearby surface water as part of the preliminary groundwater under the direct influence of surface water (GWUDI) assessment. A graph and tables of the physical parameter measurements collected are provided in Appendix VIII.

3.1 Well 1

The pump in Well 1 was started at 12:21 on June 20, 2022. Prior to the start of pumping in any of the onsite wells, the water level in Well 1 was flowing artesian over the top of casing. The pump in Well 6A was started before Well 1 at 10:45. During the intervening period between the start of pumping in Well 6A and the start of pumping in Well 1, the water level in Well 1 declined to 3.05 ft btoc (feet below top of casing).

Following the start of pumping in Well 1, the pumping rate in the well was adjusted to 46 gpm. As the test progressed and the pumping water level in the well declined, the pumping rate decreased to 37 gpm on June 22. The pumping rate remained at 37 gpm for the last 24 hours of the test period.

The pump in Well 1 was shut down at 17:00 on June 23 after 76 hours and 39 minutes of continuous pumping. The final pumping water level in Well 1 at the end of the test was 244.65 ft btoc, for a total drawdown of 244.65 feet. The water-level change over the last six hours of pumping in Well 1 was 1.0 foot, which meets the stabilization criteria of less than 0.5 foot per 100 feet of available drawdown in the well. The water-level trend was slightly downward at the end of the test period, therefore, a 180-day water-level drawdown projection has been completed for Well 1 to assess the water level in the well after 180 days of continuous pumping. A copy of the 180-day water-level drawdown projection graph is included in Appendix III. Based on the projection, the water level in the well after 180 days of continuous pumping is 296.12 ft btoc. The projection data support that the pumping rate of 37 gpm is a sustainable yield capacity for Well 1 pumping concurrently with both Wells 3 and 6A.

Water-level recovery in Well 1 was measured for five days after shutdown of the test. The water level in the well reached 90% approximately 5.7 hours (339 minutes) after shutdown of the pump and the well was flowing artesian again approximately 14 hours after the end of the test.

3.2 Well 3

The pump in Well 3 was started at 16:38 on June 20, 2022. Prior to the start of pumping in any of the onsite wells, the water level in Well 3 was flowing artesian over the top of casing. The pumps in Wells 1 and 6A were started before Well 3. However, no drawdown was measured in Well 3 during the intervening period and the water level in Well 3 was still artesian just prior to the start of the well pump.

Following the start of pumping in Well 3, the pumping rate in the well was adjusted to 38 gpm and manually decreased to 36 gpm at 17:32. As the test progressed and the pumping water level in the well declined, the pumping rate decreased to 33 gpm on June 21. The pumping rate remained at 33 gpm for the duration of the test period.

The pump in Well 3 was shut down at 17:00 on June 23 after 72 hours and 22 minutes of continuous pumping. The final pumping water level in Well 3 at the end of the test was 107.77 ft btoc, for a total drawdown of 107.77 feet. The water-level change over the last six hours of pumping in Well 3 was 1.09 feet, which meets the stabilization criteria of less than 0.5 foot per 100 feet of available drawdown in the well. The water-level trend was slightly downward at the end of the test period, therefore, a 180-day water-level drawdown projection has been completed for Well 3 to assess the water level in the well after 180 days of continuous pumping. A copy of the 180-day water-level drawdown projection graph is included in Appendix III. Based on the projection, the water level in the well after 180 days of continuous pumping is 177.26 ft btoc. The projection data support that the pumping rate of 33 gpm is a sustainable yield capacity for Well 3 pumping concurrently with both Wells 1 and 6A.

Water-level recovery in Well 3 was measured for five days after shutdown of the test. The water level in the well reached 90% approximately 24.3 hours (1,457 minutes) after shutdown of the pump and the well was flowing artesian again approximately 39 hours after the end of the test.

3.3 Well 6A

The pump in Well 6A was started at 10:45 on June 20, 2022. Prior to the start of pumping, the static water level in Well 6A was flowing artesian over the top of casing. Following the start of the pump in Well 6A, the pumping rate in the well was adjusted to 45 gpm. As the test progressed and the pumping water level in the well declined, the pumping rate decreased to 43 gpm on June 22. The pumping rate remained at 43 gpm for the duration of the test period.

The pump in Well 6A was shut down at 17:00 on June 23 after 78 hours and 15 minutes of continuous pumping. The final pumping water level in Well 6A at the end of the test was 108.72 ft btoc, for a total drawdown of 108.72 feet. The water-level change over the last six hours of pumping in Well 6A was 1.10 foot, which meets the stabilization criteria of less than 0.5 foot per 100 feet of available drawdown in the well. The water-level trend was slightly downward at the end of the test period, therefore a 180-day water-level drawdown projection has been completed for Well 6A to assess the water level in the well after 180 days of continuous pumping. A copy of the 180-day water-level drawdown projection graph is included in Appendix III. Based on the projection, the water level in the well after 180 days of continuous pumping is 152.78 ft btoc. The projection data support that the pumping rate of 43 gpm is a sustainable yield capacity for Well 6A pumping concurrently with both Wells 1 and 3.

Water-level recovery in Well 6A was measured for five days after shutdown of the test. The water level in the well reached 90% approximately 8.5 hours (511 minutes) after shutdown of the pump and the well was flowing artesian again approximately 16 hours after the end of the test.

3.4 June 2022 72-Hour Pumping Test Yield Summary

The June 2022 72-hour pumping test demonstrated stabilized yields and water-level drawdown in Wells 1, 3 and 6A at pumping rates of 37 gpm, 33 gpm and 43 gpm, for a combined 113 gpm (162,720 gpd (gallons per day)). Similar to the May 2013 pumping test, Well 6A was the best well. Therefore, excluding the pumping volume of Well 6A, Wells 1 and 3 demonstrated that they can pump at a combined yield of 70 gpm or (100,800 gpd) during the June 2022 pumping test. This data are supported by the results from the prior May 2013 pumping test program which showed that Wells 1, 2B, 3, 5 and Irrigation Wells 4 and 5 can pump simultaneously at 50 gpm, 12 gpm, 32 gpm, 19.5 gpm, 32 gpm and 40 gpm, respectively, for a combined yield of 185.5 gpm.

The combined yield capacity of Wells 1 and 3 of 70 gpm (100,800 gpd) can support an average water demand of 50,400 gpd with the best well out of service which is more than sufficient to meet the water demand calculated in the table above (48,929 gpd). In the future, the use of all three well (Wells 1, 3 and 6A) concurrently is not likely to occur. The combined pumping rate of 113 gpm was 3.3 times the project’s proposed average water demand. However, the pumping test has demonstrated that the proposed supply wells can be operated concurrently in any pumping combination warranted in the future to meet the water system’s well service and maintenance needs.

4.0 ONSITE MONITORING WELLS

Water-level measurements were collected from seven onsite monitoring wells during the pumping test period. The hydrographs and a summary table of water-level measurements collected from the onsite monitoring wells are provided in Appendix IV and the well locations are shown on Figure 2.

Well 2B, Well 5 and former Irrigation Well 3 were flowing artesian prior to the start of the pumping test. Pressure transducers were installed in Wells 2B and former Irrigation Well 3 to measure water levels during the test period. Well 5 is capped with an outlet pipe which controls and diverts the overflow from this well. Therefore, the overflow rate was measured on Well 5 during the data collection period in lieu of water-level measurements to assess potential pumping-related impact.

Pressure transducers were also installed in Wells 9 and 10 and Irrigation Wells 4 and 5. Water levels were shallow in these wells, but the wells were not flowing during the test period. A slight declining water level trend is noted in the background water-level data in Irrigation Wells 4 and 5 and in Well 10. The continuation of this naturally declining trend during the test period and into the recovery period is evident in the wells.

Water-level drawdown that is attributed to Wells 1, 3 and 6A pumping was measured in Wells 2B, Irrigation Well 4 and Irrigation Well 5. Taking into account the natural declining trend observed in the background water-level data, the drawdown measured in Well 2B was approximately 9.1 feet, in Irrigation Well 4 approximately 1.6 feet, and in Irrigation Well 5 approximately 3.5 feet. The water level in these three wells fully recovered after the pumping test ended. Well 2B resumed artesian flow two days after the end of the test and Irrigation Wells 4 and 5 were 90% recovered within three days and resumed a slight declining water level on trend with the pre-test water levels approximately four days after the end of the test period.

No discernible drawdown that was attributed to Wells 1, 3 and 6A pumping was measured in Wells 5, 9, 10 or former Irrigation Well 3.

The table below is a summary of the drawdown observed in the onsite monitoring wells during the June 2022 72-hour pumping test.

Table 4: Drawdown Measured During June 2022 Pumping Test in Onsite Monitoring Wells

Address	Drawdown Measured During June 2022 Pumping Test (feet)
Well 2B	9.1
Well 5	ND
Well 9	ND
Well 10	ND
Former Irrigation Well 3	ND
Irrigation Well 4	1.6
Irrigation Well 5	3.5

ND None discernible

The drawdown measured in the onsite wells decreased with increasing distance from the pumping wells. In addition, the drawdown measured in the Irrigation Wells 4 and 5 was not significant and in line with the expected well interference based on the data from the May 2013 72-hour pumping test program.

5.0 OFFSITE MONITORING WELLS

The table below is a list of all properties that were contacted with a request to measure their well during the 2022 pumping test.

Table 5: Properties Contacted in 2022 With Request for Well Monitoring

Property Address	Comments
6 Evan Place	No response, form returned to WSP.
7 Evan Place	No response, form returned to WSP.
9 Evan Place	No response, form returned to WSP.
5 Norman Place	No response, form returned to WSP.
6 Norman Place (mailing address 113 Cold Springs Rd, Fishkill, NY 12524)	No response, form returned to WSP.
182 Byram Lake Road	No response, form returned to WSP.
82 Old Byram Lake Road	No response, form returned to WSP.
76 Old Byram Lake Road	No response, form returned to WSP.
74 Old Byram Lake Road	No response, form returned to WSP.
7 Willow Pond Lane	No response, form returned to WSP.
18 Blair Road	No response, form returned to WSP.
12 Blair Road	No response, form returned to WSP.
26 Blair Road	No response, form returned to WSP.
24 Blair Road	No response, form returned to WSP.
538 Bedford Road	No response, form returned to WSP.
3 Colonial Court	No response, form returned to WSP.
4 Colonial Court	No response, form returned to WSP.

Property Address	Comments
5 Colonial Court	No response, form returned to WSP.
7 Colonial Ct (mailing address 60 Knightbridge Rd, Great Neck, NY	No response, form returned to WSP.
5 Evan Place	No response, form returned to WSP.
3 Oregon Road	Property owner declined participation.
68 Old Byram Lake Road	Property owner declined participation.
66 Old Byram Lake Road	Property owner declined participation.
1 Colonial Court	Property owner declined participation.
8 Byram Hill Road	Property owner declined participation.
80 Old Byram Lake Road	Property owner declined participation.
7 Oregon Road	Property owner declined participation.
10 Evan Place	Property owner declined participation.
3 Willow Pond Lane	Property owner declined participation.
11 Blair Road	Signed permission form returned, well measured during June 2022 pumping test.
8 Embassy Court	Signed permission form returned, well measured during June 2022 pumping test.
10 Byram Hill Road	Signed permission form returned, well measured during June 2022 pumping test.
34 Blair Road	Signed permission form returned, well measured during June 2022 pumping test.
30 Blair Road	Signed permission form returned, well measured during June 2022 pumping test.
10 Willow Pond Lane	Signed permission form returned, well measured during June 2022 pumping test.
14 Willow Pond Lane	Signed permission form returned, well measured during June 2022 pumping test.
8 Colonial Court	Signed permission form returned, well measured during June 2022 pumping test.
8 Evan Place	Signed permission form returned, well measured during June 2022 pumping test.
198 Byram Lake Road	Signed permission form returned, well measured during June 2022 pumping test.
4 Norman Place	Signed permission form returned, well measured during June 2022 pumping test.
6 Byram Hill Road	Signed permission form returned, well measured during June 2022 pumping test.
188 Byram Lake Road	Signed permission form returned, but permission rescinded.
70 Old Byram Lake Road	Signed permission form returned, well measured during June 2022 pumping test.
19 Blair Road	Signed permission form returned, well could not be measured.

Water-level measurements were ultimately collected from 13 offsite monitoring wells during the pumping test period. The hydrographs and a summary table of water-level measurements collected from the offsite monitoring wells are provided in Appendix V and the well locations are shown on Figure 3.

Pressure transducers were installed in all of the offsite wells measured. A slight declining water-level trend is noted in the background water-level data in several of the offsite wells, similar to the trend observed in onsite

Irrigation Wells 4 and 5 and Well 10. The continuation of this naturally-declining trend during the test period and into the recovery period is also evident in the wells.

Water-level drawdown that was attributed to pumping Wells 1, 3 and 6A during the June 2022 testing program was measured in 3 of the 13 wells monitored. Drawdown of approximately 1.0 foot was measured in the well at 10 Willow Pond Lane and, taking into account the natural declining trend observed in the background water-level data, the drawdown measured in the wells at 30 Blair Road and 34 Blair Road was 5.8 feet in both wells. The water-level drawdown trends in all three wells were stable at the end of the 72-hour pumping test period.

No discernible drawdown that was attributed to Wells 1, 3 and 6A pumping was measured in the remaining 10 offsite wells measured during the June 2022 pumping test. The table below is a summary of the drawdown measured during the June 2022 pumping test.

Table 6: Drawdown Measured During June 2022 Pumping Test in Offsite Monitoring Wells

Address	Drawdown Measured During June 2022 Pumping Test (feet)
11 Blair Road	ND
8 Embassy Court	ND
10 Byram Hill Road	ND
34 Blair Road	5.8
30 Blair Road	5.8
10 Willow Pond Lane	1.0
14 Willow Pond Lane	ND
8 Colonial Court	ND
8 Evan Place	ND
198 Byram Lake Road	ND
4 Norman Place	ND
6 Byram Hill Road	ND
70 Old Byram Lake Road	ND

ND None discernible

The drawdown measured in the three offsite wells during the June 2022 72-hour pumping test occurred with Wells 1, 3 and 6A pumping currently at rates of 37 gpm, 33 gpm and 43 gpm, for a combined 113 gpm for 72+ hours continuously during a dry period. This combined pumping rate of 113 gpm is 3.3 times the project's proposed average water demand. In the future, the use of all three wells (Wells 1, 3 and 6A) concurrently is not likely to occur, and with the proposed supply wells used in rotation and cycling on and off, the drawdown in the offsite wells will likely be less that what was measured during the June 2022 pumping test and the future use of these wells should not be affected by the use of the Summit Club supply wells.

The reported pump setting at 30 Blair Road is 80 feet and in 34 Blair Road is 200 feet (reported to WSP by the property owners). Based on the static water level height at the end of the 72-hour test period, this leaves approximately 45 feet of drawdown available in the well at 30 Blair Road and 160 feet of drawdown in the well at 34 Blair Road. The June 2022 pumping test was conducted during an extended dry period and at a combined rate 3+ times the project's average water demand. Despite the minor well interference observed, with the remaining available drawdown in these wells there should be no effect on their capacity to supply the associated homes in the future.

The 2022 offsite well monitoring results are similar to the findings from the May 2013 pumping test conducted. The table below is a summary of the wells measured and the drawdown observed.

Table 7: Drawdown Measured During May 2013 Pumping Test in the Offsite Monitoring Wells

Address	Drawdown Measured During May 2013 Pumping Test (feet) Test on Wells 1, 2B, 3, 5 and Irrigation Wells 4 and 5/Test on Well 6A
19 Ilana Court	ND/ND
12 Ilana Court	ND/ND
8 Embassy Court	11/7[1/]
4 Embassy Court	ND/ND
3 Embassy Court	ND/ND
6 Colonial Court	ND/ND
34 Blair Road	13/ND
30 Blair Road	13/ND
26 Blair Road	1/ND
70 Old Byram Lake Road	ND/ND
198 Byram Lake Road	ND/NM
9 Oregon Road	ND/ND
11 Oregon Road	ND/ND
4 Norman Place	ND/ND
3 Norman Place	ND/ND

[1/] The drawdown measured during the simultaneous pumping test was attributed to Well 5 pumping on the project site. The drawdown reported during the Well 6A pumping test period was a questionable correlation to Well 6A pumping but was reported to be conservative.

ND None discernible.

NM Not measured.

The water-level drawdown observed at 34 Blair Road and 30 Blair Road during the May 2013 was mainly attributed to pumping of existing Irrigation Wells 4 and 5, and the water-level drawdown observed occurred with Wells 1, 2B, 3 and 5 and Irrigation Wells 4 and 5 pumping at a combined rate of 185.5 gpm.

6.0 PIEZOMETER LOCATIONS

Water-level measurements were collected from a piezometer location, PZ-1, near Wells 1 and 6A during the June 2022 pumping test (Figure 2). A nested-pair of piezometers was installed at this location with one piezometer screen set shallower and the adjacent one set deeper. The hydrograph and a table of the water-level measurements collected from the piezometer locations are included in Appendix VI.

The groundwater level in the deeper piezometer showed a relatively steady, slightly declining trend throughout the background, pumping and recovery data collection periods. The groundwater level in the shallower screened piezometer was also on an overall declining trend; however, the water level showed a slight rising response to the rain events on June 16, June 22 and 23, and June 27. After the precipitation ended, the declining trend resumed. The deeper groundwater level was higher than the shallow groundwater level throughout the data collection period, indicating an upward vertical gradient at this monitoring location. Neither piezometer showed water-level drawdown in response to pumping in the onsite wells and no water-level recovery was observed after pumping ended, indicating no discernible pumping-related effects in the piezometers during the test.

7.0 WATER-QUALITY RESULTS

Water samples were collected from Wells 1, 3 and 6A at the end of the 72-hour test for analysis for NYSDOH Sanitary Code Part 5, Subpart 5-1 parameters for community, public water-supply wells listed in Tables 8A, 8B, 8C, 8D, 9B, 9C (including the extras dioxin, endothall, diquat and glyphosate), 9D, 10A, 11A, 12, lead, copper, total coliform, perfluorinated compounds (18 compound list) and radon. MPA, giardia, cryptosporidium samples were also collected from Wells 1 and 6A during the test period because these wells are located within 200 feet of surface water. The laboratory reports for the Part 5 and MPA samples are included in Appendix VII. Measurements of pH, temperature and conductivity were also collected from the Wells 1 and 6A discharge water and the nearby surface water as part of the preliminary GWUDI assessment. A graph and tables of the physical parameter measurements collected are provided in Appendix VIII.

7.1 Well 1

The Part 5 sample results for Well 1 met all NYSDOH drinking water standards with the exception of a detection of propylene glycol. The reported concentration was 1.5 mg/L (milligrams per liter) which exceeds the MCL (maximum contaminant level) of 1.0 mg/L.

The sodium concentration in Well 1 was reported at 29.4 mg/L which exceeds the NYSDOH reporting limit for people on severely sodium restricted diets but is below the recommended limit for sodium of 270 mg/L. The associated chloride concentration in Well 1 was 21.2 mg/L which is below the MCL for chloride of 250 mg/L.

Detections of PFOS (perfluorooctane sulfonic acid) and PFOA (perfluorooctanoic acid) were reported in the samples collected from Well 1. The PFOS concentration was 4.00 ng/L (nanograms per liter) and the PFOA concentration was 4.70 ng/L. Both detections were below their respective MCL values of 10 ng/L.

The MPA, giardia and cryptosporidium sample from Well 1 reported a low-risk potential for GWUDI and giardia and cryptosporidium were not detected.

7.2 Well 3

The Part 5 sample results for Well 3 met all NYSDOH drinking water standards with the exception of a detection of propylene glycol and the presence of total coliform. The reported concentration propylene glycol was 1.1 mg/L which exceeds the MCL of 1.0 mg/L.

Total coliform was reported present in the sample collected; E.coli was absent.

The Langlier Index value reported for Well 3 was -0.6 which is outside of the desired range of 0.5 to -0.5 and should be taken into consideration during the water system treatment design.

Detections of PFOS and PFOA were reported in the samples collected from Well 3. The PFOS concentration was 2.05 ng/L and the PFOA concentration was 3.35 ng/L. Both detections were below their respective MCL values of 10 ng/L.

7.3 Well 6A

The Part 5 sample results for Well 6A met all NYSDOH drinking water standards with the exception of a detection of propylene glycol and the presence of total coliform. The reported concentration propylene glycol was 1.1 mg/L which exceeds the MCL of 1.0 mg/L.

Total coliform was reported present in the sample collected; E.coli was absent.

The Langlier Index value reported for Well 6A was -0.56 which is outside of the desired range of 0.5 to -0.5 and should be taken into consideration during the water system treatment design.

Detections of PFOS and PFOA were reported in the samples collected from Well 6A. The PFOS concentration was 2.29 ng/L and the PFOA concentration was 3.38 ng/L. Both detections were below their respective MCL values of 10 ng/L.

The MPA, giardia and cryptosporidium sample from Well 6A reported a low-risk potential for GWUDI and giardia and cryptosporidium were not detected.

7.4 Physical Parameter Measurements

Measurements of pH, temperature and conductivity were collected from Wells 1 and 6A discharge water and the nearby surface water as part of the preliminary GWUDI assessment. The graphs and summary tables of the measurements collected are provided in Appendix VIII.

The conductivity values in Wells 1 and 6A were generally consistent throughout the pumping test period and overall were higher than the values measured in the nearby surface water. The pH values in Wells 1 and 6A were also higher overall than the surface water values. The temperature values in Wells 1 and 6A were lower than the surface water temperature and showed no significant oscillation up or down during the test period.

The physical parameter data supports the MPA's reported low risk potential for GWUDI in Wells 1 and 6A.

8.0 CONCLUSIONS

- A combined 72-hour pumping test was conducted on Wells 1, 3 and 6A on the Summit Club property from June 20 through 23, 2022. Wells 1, 3 and 6A demonstrated stabilized yield and water-level drawdown at pumping rates of 37 gpm, 33 gpm and 43 gpm, respectively, at the end of the test period. Additionally, the 180-day water-level drawdown projections completed for Wells 1, 3, and 6A using the pumping test data support that these are sustainable long-term yields for the wells.
- Following the end of pumping, water-level recovery reached 90% of the pre-test level in Well 1 within 5.7 hours, in Well 3 within 24.3 hours and in Well 6A in 8.5 hours.
- The combined yield of Wells 1, 3, and 6A during the June 2022 pumping test was 113 gpm. With Well 6A out of services as the best well, Wells 1 and 3 can pump at a combined yield of 70 gpm or (100,800 gpd). This well capacity is sufficient to support an average water demand of up to 50,400 gpd.
- Water-level measurements were collected from seven onsite monitoring wells during the simultaneous pumping test. Drawdown was measured in three of the seven wells. Well 2B, Irrigation Well 5, and Irrigation Well 4, the three wells closest to Wells 1, 3 and 6A, showed 9.1 feet, 3.5 feet and 1.6 feet,

respectively. The drawdown measured decreased with increasing distance from the pumping wells, and no discernible drawdown was measured in Former Irrigation Well 3, Well 5, Well 9 and Well 10 on the project site.

- Water-level measurements were collected from 13 offsite wells during the June 2022 pumping test. Water-level drawdown that was attributed to pumping Wells 1, 3 and 6A during the June 2022 testing program was measured in three of the 13 wells monitored. Drawdown of approximately 1.0 foot was measured in the well at 10 Willow Pond Lane, and 5.8 feet of drawdown was measured in both the wells at 30 Blair Road and 34 Blair Road, respectively, and the water-level drawdown trends in all three wells were stable at the end of the 72-hour pumping test period. The drawdown measured in the three offsite wells during the June 2022 72-hour pumping test occurred with Wells 1, 3 and 6A pumping currently at rates of 37 gpm, 33 gpm and 43 gpm, for a combined 113 gpm for 72+ hours continuously during a dry period. This combined pumping rate of 113 gpm is 3.3 times the project's proposed average water demand. In the future, the use of all three well (Wells 1, 3 and 6A) concurrently is not likely to occur, and with the proposed supply wells used in rotation and cycling on and off, the drawdown in the offsite wells will likely be less that what was measured during the June 2022 pumping test. The future use of these offsite wells should not be affected by the use of the Summit Club supply wells.

  The reported pump setting at 30 Blair Road is 80 feet and in 34 Blair Road is 200 feet (reported to WSP by the property owners). Using the static water level height at the end of the 72-hour test period, this leaves approximately 45 feet of drawdown available in the well at 30 Blair Road and 160 feet of drawdown in the well at 34 Blair Road. The June 2022 pumping test was conducted during an extended dry period and at a combined rate 3+ times the project's average water demand. Despite the minor well interference observed, with the remaining available drawdown in these wells there should be no effect on their capacity to supply the associated homes in the future.

- Water-level measurements were collected from a piezometer location, PZ-1, installed near Wells 1 and 6A during the June 2022 pumping test. A nested-pair of piezometers was installed with one piezometer screen set shallower and the adjacent one set deeper. The groundwater level in the deeper piezometer showed a relatively steady, slightly declining trend throughout the background, pumping and recovery data collection periods. The groundwater level in the shallower screened piezometer was also on an overall declining trend; however, the water level showed a slight rising response to the rain events on June 16, June 22 and 23, and June 27. After the precipitation ended, the declining trend resumed. The deeper groundwater level was higher than the shallow groundwater level throughout the data collection period, indicating an upward vertical gradient at this monitoring location. Neither piezometer showed water-level drawdown in response to pumping in the onsite wells and no water-level recovery was observed after pumping ended, indicating no discernible pumping-related effects in the piezometers during the test.

- Water samples were collected from Wells 1, 3 and 6A at the end of the 72-hour test for analysis for NYSDOH Sanitary Code Part 5, Subpart 5-1 parameters for community, public water-supply wells listed in Tables 8A, 8B, 8C, 8D, 9B, 9C (including the extras dioxin, endothall, diquat and glyphosate), 9D, 10A, 11A, 12, lead, copper, total coliform, perfluorinated compounds (18 compound list) and radon.

- The Part 5 sample results for Well 1 met all NYSDOH drinking water standards with the exception of a detection of propylene glycol. The reported concentration was 1.5 mg/L which exceeds the MCL of 1.0 mg/L. The sodium concentration in Well 1 was reported at 29.4 mg/L which exceeds the NYSDOH reporting limit for people on severely sodium restricted diets but is below the recommended limit for sodium of 270 mg/L. The associated chloride concentration in Well 1 was 21.2 mg/L which is below the MCL for chloride of 250 mg/L. Detections of PFOS and PFOA were reported in the samples collected from Well 1. The PFOS concentration was 4.00 ng/L and the PFOA concentration was 4.70 ng/L. Both detections were below their respective MCL values of 10 ng/L.

- The Part 5 sample results for Well 3 met all NYSDOH drinking water standards with the exception of a detection of propylene glycol and the presence of total coliform. The reported concentration propylene glycol was 1.1 mg/L which exceeds the MCL of 1.0 mg/L. Total coliform was reported present in the sample collected; E.coli was absent. The Langlier Index value reported for Well 3 was -0.6 which is outside of the desired range of 0.5 to -0.5 and should be taken into consideration during the water system treatment design. Detections of PFOS and PFOA were reported in the samples collected from Well 3. The PFOS concentration was 2.05 ng/L and the PFOA concentration was 3.35 ng/L. Both detections were below their respective MCL values of 10 ng/L.
- The Part 5 sample results for Well 6A met all NYSDOH drinking water standards with the exception of a detection of propylene glycol and the presence of total coliform. The reported concentration propylene glycol was 1.1 mg/L which exceeds the MCL of 1.0 mg/L. Total coliform was reported present in the sample collected; E.coli was absent. The Langlier Index value reported for Well 6A was -0.56 which is outside of the desired range of 0.5 to -0.5 and should be taken into consideration during the water system treatment design. Detections of PFOS and PFOA were reported in the samples collected from Well 6A. The PFOS concentration was 2.29 ng/L and the PFOA concentration was 3.38 ng/L. Both detections were below their respective MCL values of 10 ng/L.
- MPA, giardia, cryptosporidium samples were also collected from Wells 1 and 6A during the test period because the well is located within 200 feet of surface water. Both MPA samples were reported as low risk and giardia and cryptosporidium were absent in the samples. The comparison of the temperature, conductivity and pH values measured from Wells 1 and 6A and the surface water near PZ-1 support the MPA low-risk results.

cmm
August 26, 2022
H:\Brynwood\2022\Summit Club_72-Hour PT Rpt\Report.docx

FIGURES

DWG Date: 09/30/21

Checked: SS

Approved: SS

Drawn By: RAC

A

O:\DWG\Brynwood\Summit Club\2021 NYSDEC Permit Modification\F1_SLM.dwg, Layout1, 9/30/2021 6:41:03 AM, DWG To PDF.pc3

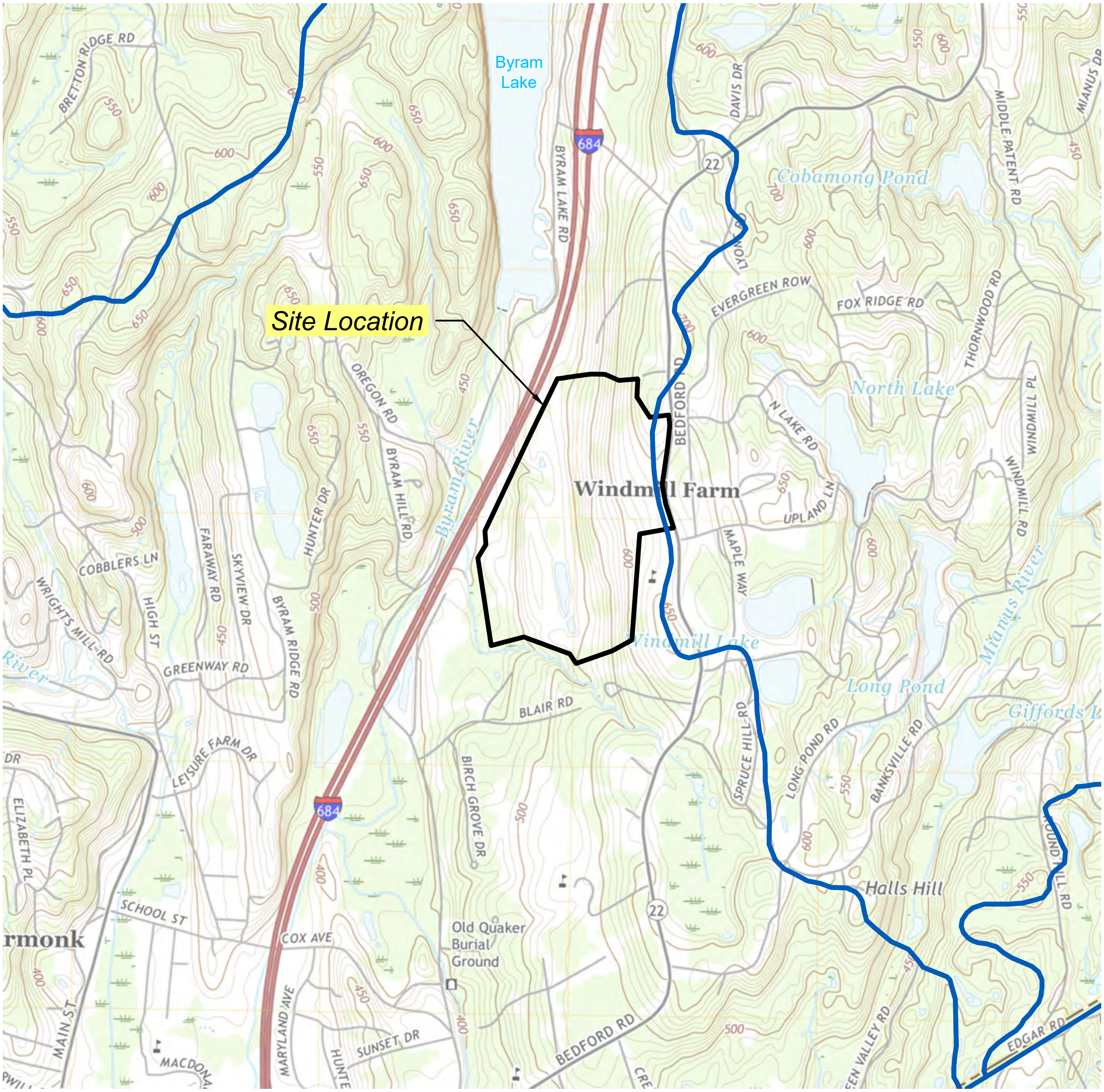

SOURCE: USGS TOPOGRAPHIC QUADRANGLE MOUNT KISCO, NEW YORK (2019).

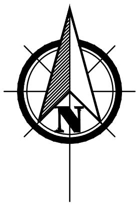

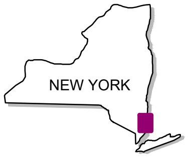

QUADRANGLE LOCATION

LEGEND

▬	PROPERTY BOUNDARY
▬	WATERSHED BOUNDARY LINE

0 2000

SCALE IN FEET

wsp

WSP USA, Inc. and related company
Hydrogeologic, Architecture, Land
Surveying, Landscape Architecture,
P.C. (WSP)
4 Research Drive
Suite 204
Shelton, Connecticut 06484
(203) 929-8555

Summit Country Club
568 Bedford Road
North Castle, New York

SITE LOCATION MAP

FIGURE 1

O:\DWG\Brynwood\Summit Club\2022\F2_OnsiteWellSM.dwg, Layout1, 7/29/2022 7:01:34 AM, DWG To PDF.pc3

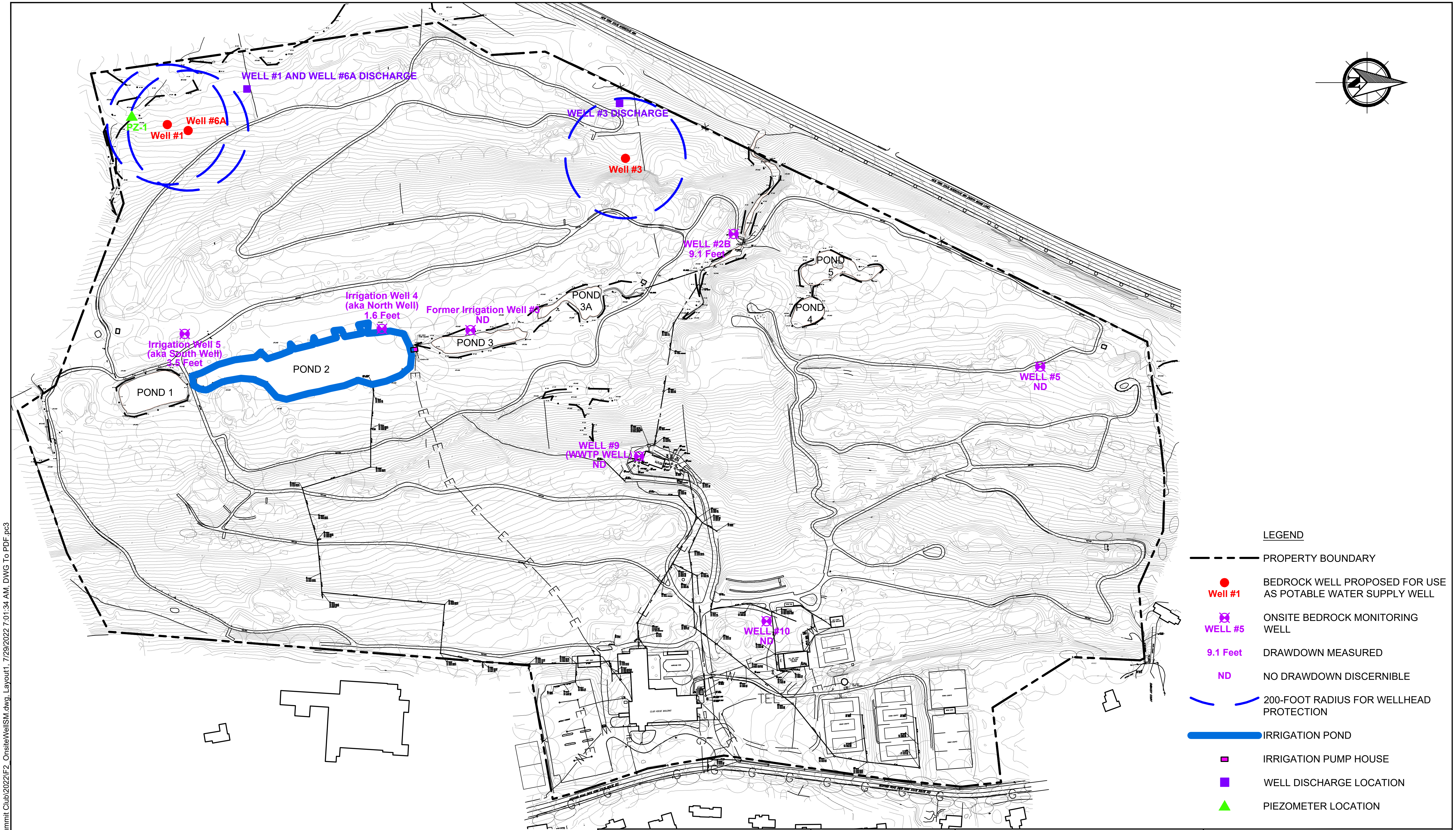

B

SOURCE:
WATERSHED OUTLINE FOR PONDS 1 & 2 AND BASE MAP OBTAINED FROM JMC DRAWING "EXISTING DRAINAGE AREA MAP" DRAWINGS NO. DA-1, DATED MAY 16, 2013.

0 300
SCALE IN FEET

wsp

WSP USA, Inc. and related company
Hydrogeologic, Architecture, Land Surveying,
Landscape Architecture, P.C. (WSP)
4 Research Drive
Suite 204
Shelton, Connecticut 06484
(203) 929-8555

Drawn By: RAC
Checked: SS
Approved: SS
DWG Date: 07/29/22

Summit Country Club
568 Bedford Road
North Castle, New York

SITE MAP AND ONSITE WELL LOCATIONS

FIGURE 2

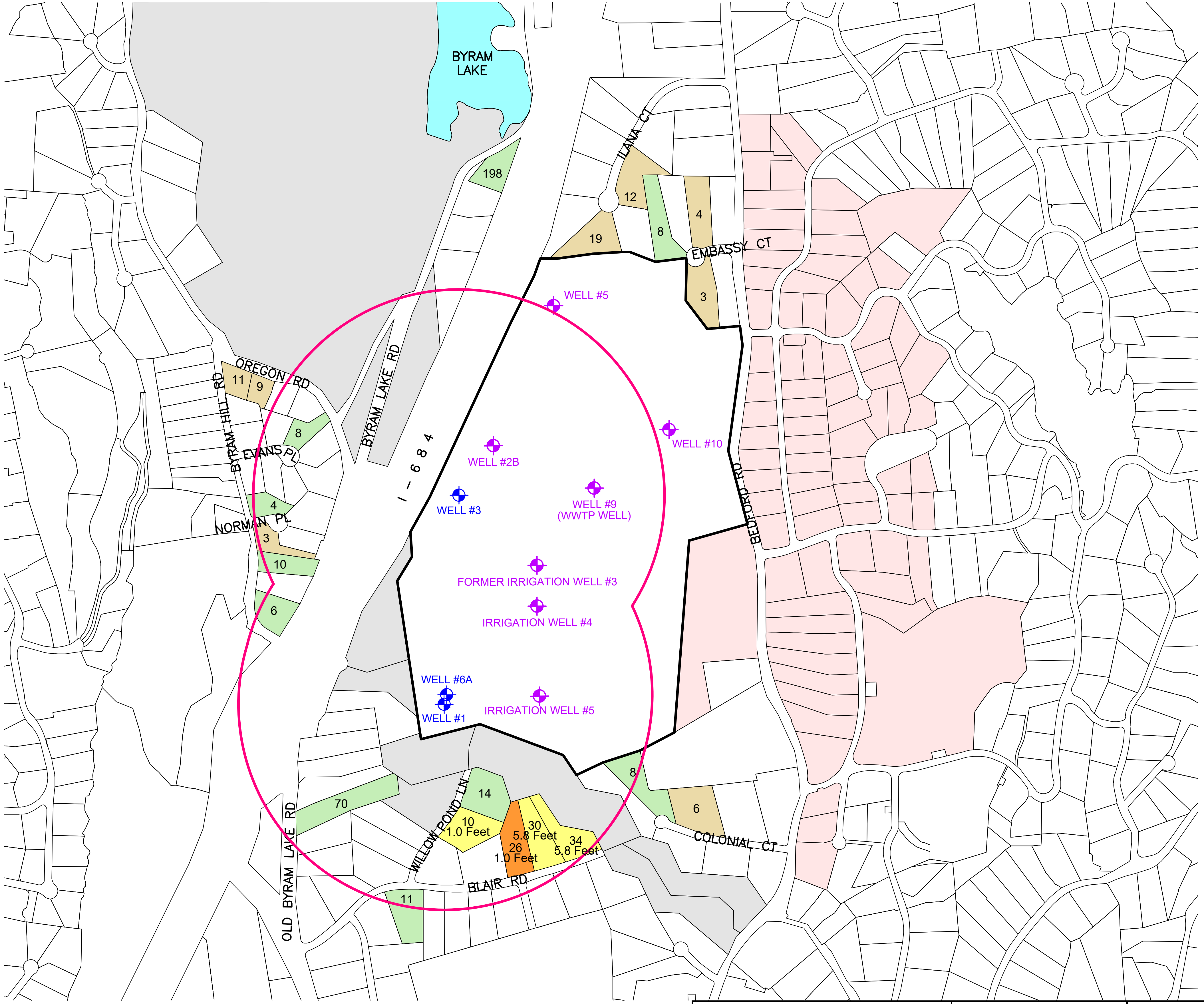

N

LEGEND

WELL #1 — ONSITE PUMPING WELL LOCATION

WELL #2B — ONSITE BEDROCK MONITORING WELL

1,500-FOOT RADIUS FROM ONSITE PUMPING WELL

🟥 PROPERTY SUPPLIED BY WINDMILL FARM WATER DISTRICT

⬜ VACANT PARCEL

🟫 WELL MONITORED DURING 2013 PUMPING TEST PROGRAM, NO DISCERNIBLE DRAWDOWN MEASURED

🟧 WELL MONITORED DURING MAY 2013 PUMPING TEST, DRAWDOWN OBSERVED

🟩 WELL MONITORED DURING JUNE 2022 PUMPING TEST PROGRAM, NO DISCERNIBLE DRAWDOWN MEASURED

🟨 WELL MONITORED DURING JUNE 2022 PUMPING TEST, DRAWDOWN OBSERVED

0 800
SCALE IN FEET

WSP USA, Inc. and related company
Hydrogeologic, Architecture, Land Surveying,
Landscape Architecture, P.C. (WSP)
4 Research Drive
Suite 204
Shelton, Connecticut 06484
(203) 929-8555

Drawn By:	RAC
Checked:	SS
Approved:	SS
DWG Date:	07/29/22

Summit Country Club
568 Bedford Road
North Castle, New York

OFFSITE WELL MONITORING PROGRAM

FIGURE 3

B

O:\DWG\Brynwood\Summit Club\2022\F3_OffsiteWellMP.dwg, Layout1, 7/29/2022 7:12:50 AM, DWG To PDF.pc3

APPENDIX I

Subject: FW: WCDOH File I.D.: C22-014: Summit Country Club Pump Testing

---

From: Thein, Zaw <ztt1@westchestergov.com>
Sent: Thursday, March 10, 2022 4:27 PM
To: Stieber, Stacy <Stacy.Stieber@wsp.com>
Cc: McVeigh, Heather <hdh1@westchestergov.com>; Cusack, Thomas <Thomas.Cusack@wsp.com>; DeLucia, Peter <ppd4@westchestergov.com>; smisiti@northcastleny.com
Subject: RE: WCDOH File I.D.: C22-014: Summit Country Club Pump Testing

Stacy:

The receipt of a revised Pumping Test Plan for the above referenced facility is hereby acknowledged. This Department has no objection to the well yield test plan outlined in the revised plans dated January 26, 2022, last revised March 9, 2022 that also addresses all the comments issued in the Department email correspondence dated February 21, 2022. Please be mindful of the following items before the scheduled well yield testing and setting the pumping rates that will be used to demonstrate that the minimum source capacity requirements in accordance with the 10-States standards are met.

1. This Department does not allow 20% reduction for the use of water saving fixture in calculated water demand in designing of a water supply system.
2. Gallons per Day (GPD) to Gallons per Minutes (GPM) conversion is required to be based on the hour of operations of each facility. (e.g. residential units water demand shall be based on 24 hr. and restaurant/Bar/swimming pool/club, etc. water demand shall be based on the corresponding hours of operation of the facility).

Should you have any questions or require additional information, please feel free to contact me.

Sincerely,
Zaw

Zaw T. Thein, P.E.
Associate Engineer
Bureau of Environmental Quality
Westchester County Department of Health
25 Moore Avenue, Mt. Kisco, NY 10549
Tel: 914-864-7348
Fax: 914-813-4691
ztt1@westchestergov.com

From: Thein, Zaw
Sent: Monday, February 21, 2022 12:06 PM
To: 'Stieber, Stacy' <Stacy.Stieber@wsp.com>
Cc: McVeigh, Heather <hdh1@westchestergov.com>; Cusack, Thomas <Thomas.Cusack@wsp.com>; DeLucia, Peter

<ppd4@westchestergov.com>; 'smisiti@northcastleny.com' <smisiti@northcastleny.com>
Subject: WCDOH File I.D.: C22-014: Summit Country Club Pump Testing

Good Afternoon Stacy:

The receipt of your submittal for well testing plan at the above referenced facility is hereby acknowledged. The following items are required during the proposed simultaneous well testing at Well #1, Well #3 and Well #6A:

1. The wells that were monitored at the offsite properties that show effects during 2013 simultaneous yield testing must be re-monitored. That is:
   a. #8 Embassy Ct.
   b. #1 Blair Rd.
   c. #30 Blair Rd.
   d. #34 Blair Rd.
2. The properties that were solicited for well monitoring but did not response at the time and did not get their wells monitored during 2013 yield testing must be resolicited and monitored if permission granted by the owners at this time.
3. Properties that were vacant during 2013 test must be reconfirmed if they are still vacant. If any of those vacant lots are occupied at this time, solicitation to those properties must be made and well monitoring must be conducted if permission granted.
4. All onsite wells that will not be purposed for drinking water supply system but will be used for other purposes, such as irrigation and/or for fire tanks (if any) are required to be monitored.
5. In order to keep all approval records in one place, please resubmit copies of WCDOH Approval of Plans issued for those wells.
6. Please also clarify which entity will be the applicant for the water system development (i.e., owner of the proposed water supply system).

Should you have any questions or require additional information, please feel free to contact me.

Sincerely,
Zaw

Zaw T. Thein, P.E.
Associate Engineer
Bureau of Environmental Quality
Westchester County Department of Health
25 Moore Avenue, Mt. Kisco, NY 10549
Tel: 914-864-7348
Fax: 914-813-4691
ztt1@westchestergov.com

APPENDIX II

Westchester County Department Health
Bureau of Environmental Quality

WELL COMPLETION REPORT: WeLL #1

WCDH File No.

This report is to be completed by well driller and submitted to Health Department, together with laboratory report of analysis of water sample indicating water is of satisfactory bacterial quality, before certificate of construction compliance is issued.

Well construction to be in accordance with Westchester County Health Dept, Rules & Regulations for the Design and Construction of Residential Subsurface Sewage Treatment System and Drilled Wells in Westchester County, NY.

Located at: 568 BedFORD RD Section: Block:
Well Location Municipality: N. CASTLe Lot:
Owner Last Name: BrYNWOOD Owner First Name: C.C.
St. # 568 Street Name: RTE 22 Municipality: ARMONK State: NY Zip Code: 10504
Well Driller (WD) Company Name:

Well Pit and Pump Equipment: Pitless Adapter: Other – Describe
Pump Make: Pump Type: Pump Capacity: Pump GPM:
Storage Tank Type: Storage Tank Capacity:

Well Details:
Casing Length: 51 Ft. Yield Test Type: Air
Casing Diameter 6 in. Yield Test Duration: 6 Hrs.
Casing Material: STeeL Well Yield: 75 G.P.M.
Measured from Land
Water Level, Static: 0 Ft.
Water Level, Pumped: 500 Ft.
Screen Make: Screen Diameter: Inches
Screen Length: Ft. Screen Slot Size:
TOTAL WELL DEPTH : 575 Ft.

WELL LOG :

Depth From Ground Surface	Give description of formation penetrated, such as: peat, silt, sand, gravel, clay, hardpan, shale, sandstone, granite, etc. Include size of gravel (diameter) and sand (fine, medium, coarse), color of material, structure (loose, packed, cemented, soft, hard). For example: 0 ft. to 27 ft. fine, packed, yellow sand; 27 ft. to 134 ft. gray granite.

0 Ft. to 17 Ft. Well Geology, 1st Strata : HArdPAN & CLAY
17 Ft. to 575 Ft. Well Geology, 2nd Strata: GrAY GrANITe
Ft. to Ft. Well Geology, 3rd Strata :
Ft. to Ft. Well Geology, 4th Strata :
Ft. to Ft. Well Geology, 5th Strata :

I certify that the individual water supply indicated above was installed as per the Westchester County Health Department Rules & Regulations for the Design and Construction of Residential Subsurface Sewage Treatment System and Drilled Wells in Westchester County, NY.

Date Well Was Completed: 4/25/13 Date of Signature 5/29/13
NYSDEC Registration #: 10318 Well Driller Signature :

Revised 1/18/09

Westchestergov.com

Westchester County Department Health
Bureau of Environmental Quality

WELL COMPLETION REPORT: Well #2B

WCDH File No.

This report is to be completed by well driller and submitted to Health Department, together with laboratory report of analysis of water sample indicating water is of satisfactory bacterial quality, before certificate of construction compliance is issued.

Well construction to be in accordance with Westchester County Health Dept, Rules & Regulations for the Design and Construction of Residential Subsurface Sewage Treatment System and Drilled Wells in Westchester County, NY.

Located at: 568 BedFORD RD Section: Block:

Well Location Municipality: N. CASTLE Lot:

Owner Last Name: BrYNWOOD Owner First Name: C.C.

St. # 568 Street Name: RTE 22 Municipality: ArMONK State: NY Zip Code: 10504

Well Driller (WD) Company Name:

Well Pit and Pump Equipment: Pitless Adapter: Other – Describe

Pump Make: Pump Type: Pump Capacity: Pump GPM:

Storage Tank Type: Storage Tank Capacity:

Well Details:

Casing Length: 100 Ft. Yield Test Type: Air Measured from Land

Casing Diameter 6 in. Yield Test Duration: 6 Hrs. Water Level, Static: 0 Ft.

Casing Material Steel Well Yield: 20 G.P.M. Water Level, Pumped: 500 Ft.

Screen Make: Screen Diameter: Inches

Screen Length: Ft. Screen Slot Size: **TOTAL WELL DEPTH :** 545 Ft.

WELL LOG :

Depth From Ground Surface	Give description of formation penetrated, such as: peat, silt, sand, gravel, clay, hardpan, shale, sandstone, granite, etc. Include size of gravel (diameter) and sand (fine, medium, coarse), color of material, structure (loose, packed, cemented, soft, hard). For example: 0 ft. to 27 ft. fine, packed, yellow sand; 27 ft. to 134 ft. grey granite.

0 Ft. to 32 Ft. Well Geology, 1st Strata : HARDPAN + WATER

37 Ft. to 88 Ft. Well Geology, 2nd Strata: SOFT CAVING ROCK

88 Ft. to 545 Ft. Well Geology, 3rd Strata : GRAY GRANITE

Ft. to Ft. Well Geology, 4th Strata :

Ft. to Ft. Well Geology, 5th Strata :

I certify that the individual water supply indicated above was installed as per the Westchester County Health Department Rules & Regulations for the Design and Construction of Residential Subsurface Sewage Treatment System and Drilled Wells in Westchester County, NY.

Date Well Was Completed: 4/23/13 Date of Signature 5/29/13

NYSDEC Registration #: 10318 Well Driller Signature :

Revised 1/18/08

Westchestergov.com

Westchester County Department Health
Bureau of Environmental Quality

WELL COMPLETION REPORT: Well #3

WCDH File No.

This report is to be completed by well driller and submitted to Health Department, together with laboratory report of analysis of water sample indicating water is of satisfactory bacterial quality, before certificate of construction compliance is issued.

Well construction to be in accordance with Westchester County Health Dept, Rules & Regulations for the Design and Construction of Residential Subsurface Sewage Treatment System and Drilled Wells in Westchester County, NY.

Located at: 568 Bedford Rd
Section:
Block:
Well Location Municipality: N. Castle
Lot:
Owner Last Name: Brynwood
Owner First Name: C.C.
St. #: 568
Street Name: Rte 22
Municipality: Armonk
State: NY
Zip Code: 10504
Well Driller (WD) Company Name:

Well Pit and Pump Equipment:
Pitless Adapter:
Other – Describe
Pump Make:
Pump Type:
Pump Capacity:
Pump GPM:
Storage Tank Type:
Storage Tank Capacity:

Well Details:
Casing Length: 61 Ft.
Yield Test Type: Air
Measured from Land
Casing Diameter: 6 In.
Yield Test Duration: 6 Hrs.
Water Level, Static: 0 Ft.
Casing Material: Steel
Well Yield: 40 G.P.M.
Water Level, Pumped: 600 Ft.
Screen Make:
Screen Diameter: Inches
Screen Length: Ft.
Screen Slot Size:
TOTAL WELL DEPTH : 645 Ft.

WELL LOG :

Depth From Ground Surface	Give description of formation penetrated, such as: peat, silt, sand, gravel, clay, hardpan, shale, sandstone, granite, etc. Include size of gravel (diameter) and sand (fine, medium, coarse), color of material, structure (loose, packed, cemented, soft, hard). For example: 0 ft. to 27 ft. fine, packed, yellow sand; 27 ft. to 134 ft. grey granite.

0 Ft. to 27 Ft. Well Geology, 1st Strata : Hardpan + Clay
27 Ft. to 645 Ft. Well Geology, 2nd Strata: Gray Granite
Ft. to Ft. Well Geology, 3rd Strata :
Ft. to Ft. Well Geology, 4th Strata :
Ft. to Ft. Well Geology, 5th Strata :

I certify that the individual water supply indicated above was installed as per the Westchester County Health Department Rules & Regulations for the Design and Construction of Residential Subsurface Sewage Treatment System and Drilled Wells in Westchester County, NY.

Date Well Was Completed: 1 30 13
Date of Signature 5/29/13
NYSDEC Registration #: 10318
Well Driller Signature :

Revised 1/18/06

Westchestergov.com

Westchester County Department Health
Bureau of Environmental Quality

WELL COMPLETION REPORT: Well #4

WCDH File No.

This report is to be completed by well driller and submitted to Health Department, together with laboratory report of analysis of water sample indicating water is of satisfactory bacterial quality, before certificate of construction compliance is issued.

Well construction to be in accordance with Westchester County Health Dept, Rules & Regulations for the Design and Construction of Residential Subsurface Sewage Treatment System and Drilled Wells in Westchester County, NY

Located at: 568 Bedford RD Section: Block:

Well Location Municipality: N. Castle Lot:

Owner Last Name: Brynwood Owner First Name: C.C.

St. #: 568 Street Name: Rte 22 Municipality: Armonk State: NY Zip Code: 10504

Well Driller (WD) Company Name:

Well Pit and Pump Equipment: Pitless Adapter: Other – Describe

Pump Make: Pump Type: Pump Capacity: Pump GPM:

Storage Tank Type: Storage Tank Capacity:

Well Details:

Casing Length: 61 Ft. Yield Test Type: Air **Measured from Land**

Casing Diameter 6 In. Yield Test Duration: 6 Hrs. Water Level, Static: 0 Ft.

Casing Material: Steel Well Yield: 7 G.P.M. Water Level, Pumped: 500 Ft.

Screen Make: Screen Diameter: Inches

Screen Length: Ft. Screen Slot Size: **TOTAL WELL DEPTH :** 545 Ft.

WELL LOG :

Depth From Ground Surface	Give description of formation penetrated, such as: peat, silt, sand, gravel, clay, hardpan, shale, sandstone, granite, etc. Include size of gravel (diameter) and sand (fine, medium, coarse), color of material, structure (loose, packed, cemented, soft, hard). For example: 0 ft. to 27 ft. fine, packed, yellow sand; 27 ft. to 134 ft. grey granite.

0 Ft. to 4 Ft. Well Geology, 1st Strata : Hardpan

4 Ft. to 545 Ft. Well Geology, 2nd Strata: Gray Granite

Ft. to Ft. Well Geology, 3rd Strata :

Ft. to Ft. Well Geology, 4th Strata :

Ft. to Ft. Well Geology, 5th Strata :

I certify that the individual water supply indicated above was installed as per the Westchester County Health Department Rules & Regulations for the Design and Construction of Residential Subsurface Sewage Treatment System and Drilled Wells in Westchester County, NY.

Date Well Was Completed: 2/1/13 Date of Signature 5/29/13

NYSDEC Registration #: 10318 Well Driller Signature :

Revised 1/13/06

Westchestergov.com

Westchester County Department Health

Bureau of Environmental Quality

WELL COMPLETION REPORT: Well #5

WCDH File No.

This report is to be completed by well driller and submitted to Health Department, together with laboratory report of analysis of water sample indicating water is of satisfactory bacterial quality, before certificate of construction compliance is issued.

Well construction to be in accordance with Westchester County **Health** Dept, Rules & Regulations for the Design and Construction of Residential Subsurface Sewage Treatment System and Drilled Wells in Westchester County, NY.

Located at: 568 Bedford RD

Section:

Block:

Well Location Municipality N. CASTLE

Lot:

Owner Last Name: BRYNWOOD Owner First Name: C. C.

St. # 568 Street Name: RR 22 Municipality: ARMONK State: NY. Zip Code: 10504

Well Driller (WD) Company Name:

Well Pit and Pump Equipment: Pitless Adapter: Other – Describe

Pump Make: Pump Type: Pump Capacity: Pump GPM:

Storage Tank Type: Storage Tank Capacity:

Well Details:

Casing Length: 61 Ft.

Yield Test Type: Air

Measured from Land

Casing Diameter 6 In.

Yield Test Duration: 6 Hrs.

Water Level, Static: 8 Ft.

Casing Material: Steel

Well Yield: 25 G.P.M.

Water Level, Pumped: 500 Ft.

Screen Make:

Screen Diameter: Inches

Screen Length: Ft.

Screen Slot Size:

TOTAL WELL DEPTH : 540 Ft.

WELL LOG :

Depth From Ground Surface	Give description of formation penetrated, such as: peat, silt, sand, gravel, clay, hardpan, shale, sandstone, granite, etc. Include size of gravel (diameter) and sand (fine, medium, coarse), color of material, structure (loose, packed, cemented, soft, hard). For example: 0 ft. to 27 ft. fine, packed, yellow sand; 27 ft. to 134 ft. gray granite.

0 Ft. to 7 Ft. Well Geology, 1st Strata : Hardpan

7 Ft. to 540 Ft. Well Geology, 2nd Strata: Gray Granite

Ft. to Ft. Well Geology, 3rd Strata :

Ft. to Ft. Well Geology, 4th Strata :

Ft. to Ft. Well Geology, 5th Strata :

I certify that the individual water supply indicated above was installed as per the Westchester County Health Department Rules & Regulations for the Design and Construction of Residential Subsurface Sewage Treatment System and Drilled Wells in Westchester County, NY.

Date Well Was Completed: 8/6/13

Date of Signature 5/29/13

NYSDEC Registration #: 10318

Well Driller Signature :

Revised 1/18/02

Westchestergov.com

Westchester County Department Health
Bureau of Environmental Quality

WELL COMPLETION REPORT: WELL # 6A

WCDH File No.:

This report is to be completed by well driller and submitted to Health Department, together with laboratory report of analysis of water sample indicating water is of satisfactory bacterial quality, before certificate of construction compliance is issued.

Well construction to be in accordance with Westchester County Health Dept, Rules & Regulations for the Design and Construction of Residential Subsurface Sewage Treatment System and Drilled Wells in Westchester County, NY.

Located at: 568 Bedford RD
Section:
Block:
Well Location Municipality: N. CASTLE
Lot:
Owner Last Name: BRYNWOOD
Owner First Name: C.C.
St. #: 568
Street Name: RTE 22
Municipality: ARMONK
State: NY
Zip Code: 10504
Well Driller (WD) Company Name:

Well Fit and Pump Equipment:

Pitless Adapter:
Other – Describe:
Pump Make:
Pump Type:
Pump Capacity:
Pump GPM:
Storage Tank Type:
Storage Tank Capacity:

Well Details:

Casing Length: 61 Ft.
Yield Test Type: Air
Casing Diameter: 6 In.
Yield Test Duration: 6 Hrs.
Casing Material: Steel
Well Yield: 30 G.P.M.

Measured from Land

Water Level, Static: 0 Ft.
Water Level, Pumped: 600 Ft.
Screen Make:
Screen Diameter: Inches
Screen Length: Ft.
Screen Slot Size:
TOTAL WELL DEPTH: Ft.

WELL LOG:

Depth From Ground Surface	Give description of formation penetrated, such as: peat, silt, sand, gravel, clay, hardpan, shale, sandstone, granite, etc. Include size of gravel (diameter) and sand (fine, medium, coarse), color of material, structure (loose, packed, cemented, soft, hard). For example: 0 ft. to 27 ft. fine, packed, yellow sand; 27 ft. to 134 ft. gray granite.

0 Ft. to 26 Ft. Well Geology, 1st Strata: Hardpan & Clay
26 Ft. to 625 Ft. Well Geology, 2nd Strata: Gray Granite
Ft. to Ft. Well Geology, 3rd Strata:
Ft. to Ft. Well Geology, 4th Strata:
Ft. to Ft. Well Geology, 5th Strata:

I certify that the individual water supply indicated above was installed as per the Westchester County Health Department Rules & Regulations for the Design and Construction of Residential Subsurface Sewage Treatment System and Drilled Wells in Westchester County, NY.

Date Well Was Completed: 5/13/13
Date of Signature: 5/29/13
NYSDEC Registration #: 10318
Well Driller Signature:

Revised 1/18/08

APPENDIX III

WELL 1

SUMMIT COUNTRY CLUB
568 BEDFORD ROAD
NORTH CASTLE, NEW YORK

Hydrograph of Water-Level Measurements Collected from Pumping Well 1 During the 72-Hour Pumping Test Conducted on Wells 1, 3 and 6A, June 2022

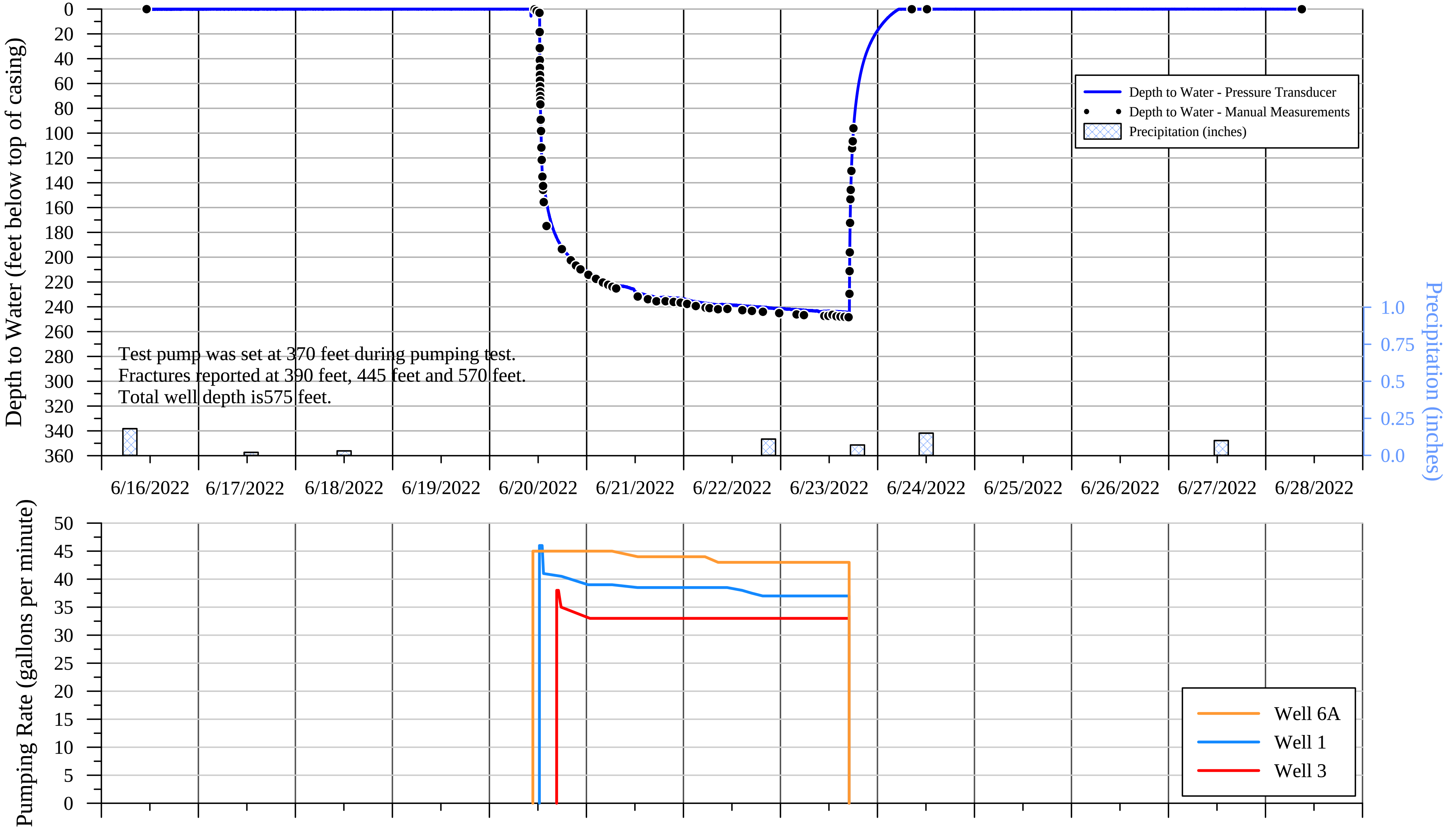

Test pump was set at 370 feet during pumping test.
Fractures reported at 390 feet, 445 feet and 570 feet.
Total well depth is575 feet.

SUMMIT COUNTRY CLUB
568 BEDFORD ROAD
NORTH CASTLE, NEW YORK

180-Day Water-Level Drawdown Projection from Measurements Collected from Pumping Well 1 During the 72-Hour Pumping Test Conducted on Wells 1, 3 and 6A, June 2022

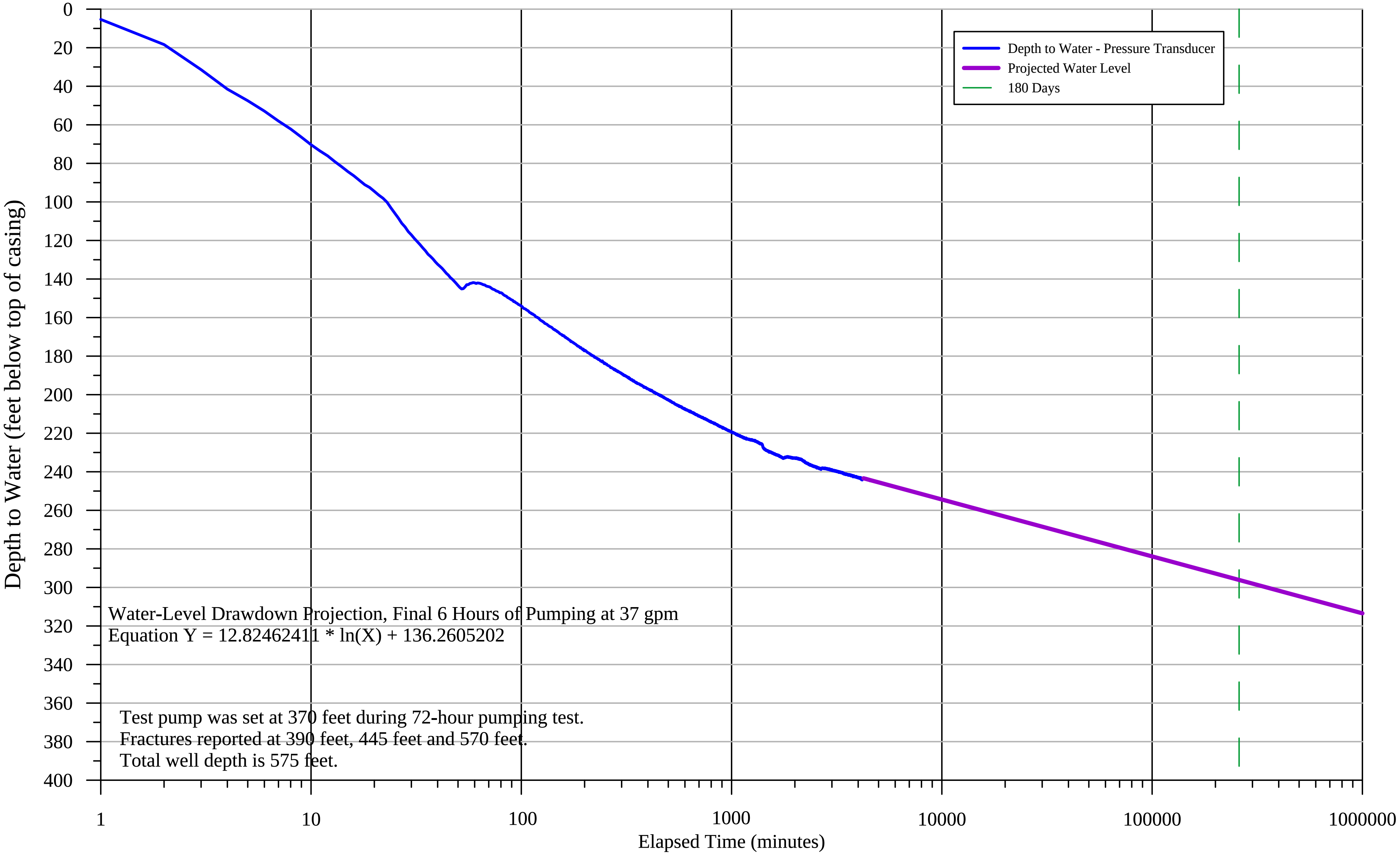

Water-Level Drawdown Projection, Final 6 Hours of Pumping at 37 gpm
Equation Y = 12.82462411 * ln(X) + 136.2605202

Test pump was set at 370 feet during 72-hour pumping test.
Fractures reported at 390 feet, 445 feet and 570 feet.
Total well depth is 575 feet.

SUMMIT COUNTRY CLUB
568 BEDFORD ROAD
NORTH CASTLE, NEW YORK

Summary of Water-Level Measurements Collected from Pumping Well 1 During the 72-Hour Pumping Test Conducted on Wells 1, 3 and 6A, June 2022

Date	Time	Depth to Water (ft btoc)/ Drawdown (feet)	Elapsed Time (minutes)	Comments
6/16/2022	12:00	0.00	--	Pressure transducer installed in well.
6/16/2022	16:00	0.00	--	Well 1 flowing artesian.
6/16/2022	20:00	0.00	--	
6/17/2022	0:00	0.00	--	
6/17/2022	4:00	0.00	--	
6/17/2022	8:00	0.00	--	
6/17/2022	12:00	0.00	--	
6/17/2022	16:00	0.00	--	
6/17/2022	20:00	0.00	--	
6/18/2022	0:00	0.00	--	
6/18/2022	4:00	0.00	--	
6/18/2022	8:00	0.00	--	
6/18/2022	12:00	0.00	--	
6/18/2022	16:00	0.00	--	
6/18/2022	20:00	0.00	--	
6/19/2022	0:00	0.00	--	
6/19/2022	4:00	0.00	--	
6/19/2022	8:00	0.00	--	
6/19/2022	12:00	0.00	--	
6/19/2022	16:00	0.00	--	
6/19/2022	20:00	0.00	--	
6/20/2022	0:00	0.00	--	
6/20/2022	4:00	0.00	--	
6/20/2022	8:00	0.00	--	
6/20/2022	10:45	0.00	--	Pump in Well 6A started.
6/20/2022	11:00	0.17	--	
6/20/2022	12:00	2.48	--	
6/20/2022	12:20	3.05	--	
6/20/2022	12:21	5.35	1	Pump in Well 1 started.
6/20/2022	12:22	18.40	2	Pumping rate adjusted to 46 gpm.
6/20/2022	12:23	31.41	3	
6/20/2022	12:24	41.51	4	
6/20/2022	12:25	47.52	5	Pumping rate 46 gpm.
6/20/2022	12:26	52.91	6	
6/20/2022	12:27	58.07	7	
6/20/2022	12:28	62.20	8	
6/20/2022	12:29	66.44	9	
6/20/2022	12:30	70.34	10	Pumping rate 46 gpm.
6/20/2022	12:31	73.51	11	
6/20/2022	12:32	76.14	12	
6/20/2022	12:33	79.19	13	
6/20/2022	12:34	81.80	14	
6/20/2022	12:35	84.37	15	Pumping rate 46 gpm.
6/20/2022	12:40	94.54	20	
6/20/2022	12:45	105.82	25	Pumping rate 46 gpm.
6/20/2022	12:50	117.11	30	
6/20/2022	12:55	125.39	35	Pumping rate 46 gpm.
6/20/2022	13:00	132.36	40	
6/20/2022	13:05	138.00	45	Pumping rate 46 gpm.
6/20/2022	13:10	143.38	50	
6/20/2022	13:15	142.98	55	Pumping rate 46 gpm.
6/20/2022	13:20	142.00	60	

SUMMIT COUNTRY CLUB
568 BEDFORD ROAD
NORTH CASTLE, NEW YORK

Summary of Water-Level Measurements Collected from Pumping Well 1
During the 72-Hour Pumping Test Conducted on Wells 1, 3 and 6A, June 2022

Date	Time	Depth to Water (ft btoc)/ Drawdown (feet)	Elapsed Time (minutes)	Comments
6/20/2022	14:00	154.06	100	Pumping rate 41 gpm.
6/20/2022	15:00	169.52	160	
6/20/2022	16:00	179.90	220	Pumping rate 40.5 gpm.
6/20/2022	16:38	184.82	258	Pump in Well 3 started.
6/20/2022	17:00	187.04	280	
6/20/2022	18:00	192.88	340	Pumping rate 40 gpm.
6/20/2022	19:00	197.00	400	
6/20/2022	20:00	200.45	460	Pumping rate 40 gpm.
6/20/2022	21:00	203.78	520	
6/20/2022	22:00	206.52	580	Pumping rate 40 gpm.
6/20/2022	23:00	209.10	640	
6/21/2022	0:00	211.07	700	Pumping rate 39 gpm.
6/21/2022	1:00	212.94	760	
6/21/2022	2:00	214.81	820	Pumping rate 39 gpm.
6/21/2022	3:00	216.50	880	
6/21/2022	4:00	218.12	940	Pumping rate 39 gpm.
6/21/2022	5:00	219.39	1000	
6/21/2022	6:00	220.52	1060	Pumping rate 39 gpm.
6/21/2022	7:00	222.10	1120	
6/21/2022	8:00	222.95	1180	Pumping rate 39 gpm.
6/21/2022	9:00	223.53	1240	
6/21/2022	10:00	224.00	1300	Pumping rate 39 gpm.
6/21/2022	11:00	225.43	1360	
6/21/2022	12:00	227.92	1420	Pumping rate 38.5 gpm.
6/21/2022	13:00	229.09	1480	
6/21/2022	14:00	229.90	1540	Pumping rate 38.5 gpm.
6/21/2022	15:00	230.60	1600	
6/21/2022	16:00	231.36	1660	Pumping rate 38.5 gpm.
6/21/2022	17:00	232.21	1720	
6/21/2022	18:00	232.83	1780	Pumping rate 38.5 gpm.
6/21/2022	19:00	232.23	1840	
6/21/2022	20:00	232.53	1900	Pumping rate 38.5 gpm.
6/21/2022	21:00	232.86	1960	
6/21/2022	22:00	232.83	2020	Pumping rate 38.5 gpm.
6/21/2022	23:00	233.38	2080	
6/22/2022	0:00	233.70	2140	Pumping rate 38.5 gpm.
6/22/2022	1:00	234.38	2200	
6/22/2022	2:00	235.39	2260	Pumping rate 38.5 gpm.
6/22/2022	3:00	236.02	2320	
6/22/2022	4:00	236.64	2380	Pumping rate 38.5 gpm.
6/22/2022	5:00	236.87	2440	
6/22/2022	6:00	237.23	2500	Pumping rate 38.5 gpm.
6/22/2022	7:00	237.90	2560	
6/22/2022	8:00	238.27	2620	Pumping rate 38.5 gpm.
6/22/2022	9:00	238.25	2680	
6/22/2022	10:00	238.11	2740	Pumping rate 38.5 gpm.
6/22/2022	11:00	238.37	2800	
6/22/2022	12:00	238.73	2860	Pumping rate 38.5 gpm.
6/22/2022	13:00	238.68	2920	
6/22/2022	14:00	239.03	2980	Pumping rate 38 gpm.
6/22/2022	15:00	239.41	3040	
6/22/2022	16:00	239.64	3100	Pumping rate 37.5 gpm.

SUMMIT COUNTRY CLUB
568 BEDFORD ROAD
NORTH CASTLE, NEW YORK

Summary of Water-Level Measurements Collected from Pumping Well 1
During the 72-Hour Pumping Test Conducted on Wells 1, 3 and 6A, June 2022

Date	Time	Depth to Water (ft btoc)/ Drawdown (feet)	Elapsed Time (minutes)	Comments
6/22/2022	17:00	239.87	3160	
6/22/2022	18:00	240.14	3220	Pumping rate 37 gpm.
6/22/2022	19:00	240.10	3280	
6/22/2022	20:00	240.47	3340	Pumping rate 37 gpm.
6/22/2022	21:00	240.98	3400	
6/22/2022	22:00	241.17	3460	Pumping rate 37 gpm.
6/22/2022	23:00	241.32	3520	
6/23/2022	0:00	241.49	3580	Pumping rate 37 gpm.
6/23/2022	1:00	241.63	3640	
6/23/2022	2:00	241.83	3700	Pumping rate 37 gpm.
6/23/2022	3:00	242.16	3760	
6/23/2022	4:00	242.49	3820	Pumping rate 37 gpm.
6/23/2022	5:00	242.75	3880	
6/23/2022	6:00	242.65	3940	Pumping rate 37 gpm.
6/23/2022	7:00	243.01	4000	
6/23/2022	8:00	243.04	4060	Pumping rate 37 gpm.
6/23/2022	9:00	243.45	4120	
6/23/2022	10:00	244.31	4180	Pumping rate 37 gpm.
6/23/2022	10:59	243.65	4239	Six hours prior to shut down of test.
6/23/2022	11:00	243.79	4240	Pumping rate 37 gpm.
6/23/2022	12:00	243.28	4300	
6/23/2022	13:00	243.55	4360	Pumping rate 37 gpm.
6/23/2022	14:00	244.07	4420	
6/23/2022	15:00	244.03	4480	Pumping rate 37 gpm.
6/23/2022	16:00	244.42	4540	
6/23/2022	16:59	244.65	4599	Pumping rate 37 gpm.
6/23/2022	17:00	232.27	-1	Pump in Well 1 shut down.
6/23/2022	17:01	222.12	-2	
6/23/2022	17:02	213.61	-3	
6/23/2022	17:03	206.52	-4	
6/23/2022	17:04	200.18	-5	
6/23/2022	17:05	194.46	-6	
6/23/2022	17:06	189.36	-7	
6/23/2022	17:07	184.62	-8	
6/23/2022	17:08	180.40	-9	
6/23/2022	17:09	176.48	-10	
6/23/2022	17:10	172.75	-11	
6/23/2022	17:11	169.40	-12	
6/23/2022	17:12	166.08	-13	
6/23/2022	17:13	163.19	-14	
6/23/2022	17:14	160.40	-15	
6/23/2022	17:19	148.25	-20	
6/23/2022	17:24	138.39	-25	
6/23/2022	17:29	130.18	-30	
6/23/2022	17:34	123.23	-35	
6/23/2022	17:39	116.99	-40	
6/23/2022	17:44	111.50	-45	
6/23/2022	17:49	106.48	-50	
6/23/2022	17:54	102.01	-55	
6/23/2022	17:59	97.84	-60	
6/23/2022	18:00	97.15	-61	
6/23/2022	19:00	66.17	-121	

SUMMIT COUNTRY CLUB
568 BEDFORD ROAD
NORTH CASTLE, NEW YORK

Summary of Water-Level Measurements Collected from Pumping Well 1
During the 72-Hour Pumping Test Conducted on Wells 1, 3 and 6A, June 2022

Date	Time	Depth to Water (ft btoc)/ Drawdown (feet)	Elapsed Time (minutes)	Comments
6/23/2022	20:00	48.70	-181	
6/23/2022	21:00	37.14	-241	
6/23/2022	22:00	28.87	-301	
6/23/2022	22:38	24.46	-339	90% recovered to pre-test level.
6/23/2022	23:00	22.38	-361	
6/24/2022	0:00	16.98	-421	
6/24/2022	1:00	12.60	-481	
6/24/2022	2:00	8.62	-541	
6/24/2022	3:00	5.39	-601	
6/24/2022	4:00	2.73	-661	
6/24/2022	5:00	0.50	-721	
6/24/2022	6:00	0.01	-781	
6/24/2022	7:00	0.00	-841	Well 1 flowing artesian.
6/24/2022	8:00	0.00	-901	
6/24/2022	9:00	0.00	-961	
6/24/2022	10:00	0.00	-1021	
6/24/2022	11:00	0.00	-1081	
6/24/2022	12:00	0.00	-1141	
6/24/2022	16:00	0.00	-1381	
6/24/2022	20:00	0.00	-1621	
6/25/2022	0:00	0.00	-1861	
6/25/2022	4:00	0.00	-2101	
6/25/2022	8:00	0.00	-2341	
6/25/2022	12:00	0.00	-2581	
6/25/2022	16:00	0.00	-2821	
6/25/2022	20:00	0.00	-3061	
6/26/2022	0:00	0.00	-3301	
6/26/2022	4:00	0.00	-3541	
6/26/2022	8:00	0.00	-3781	
6/26/2022	12:00	0.00	-4021	
6/26/2022	16:00	0.00	-4261	
6/26/2022	20:00	0.00	-4501	
6/27/2022	0:00	0.00	-4741	
6/27/2022	4:00	0.00	-4981	
6/27/2022	8:00	0.00	-5221	
6/27/2022	12:00	0.00	-5461	
6/27/2022	16:00	0.00	-5701	
6/27/2022	20:00	0.00	-5941	
6/28/2022	0:00	0.00	-6181	
6/28/2022	4:00	0.00	-6421	
6/28/2022	8:00	0.00	-6661	Pressure transducer removed from well.

gpm	gallons per minute
ft btoc	feet below top of casing

WELL 3

SUMMIT COUNTRY CLUB
568 BEDFORD ROAD
NORTH CASTLE, NEW YORK

Hydrograph of Water-Level Measurements Collected from Pumping Well 3 During the 72-Hour Pumping Test Conducted on Wells 1, 3 and 6A, June 2022

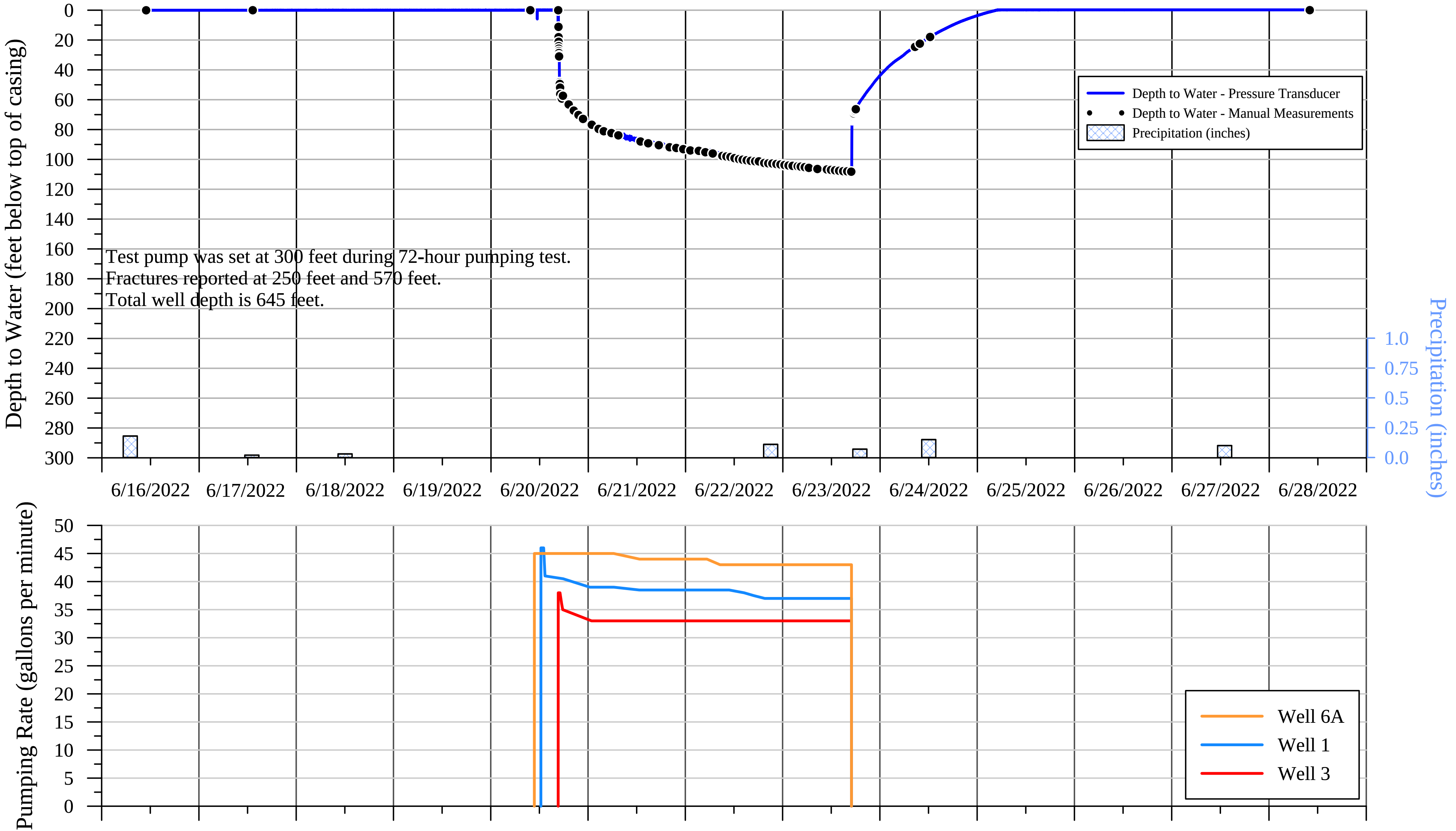

Test pump was set at 300 feet during 72-hour pumping test.
Fractures reported at 250 feet and 570 feet.
Total well depth is 645 feet.

SUMMIT COUNTRY CLUB
568 BEDFORD ROAD
NORTH CASTLE, NEW YORK

180-Day Water-Level Drawdown Projection from Measurements Collected from Pumping Well 3 During the 72-Hour Pumping Test Conducted on Wells 1, 3 and 6A, June 2022

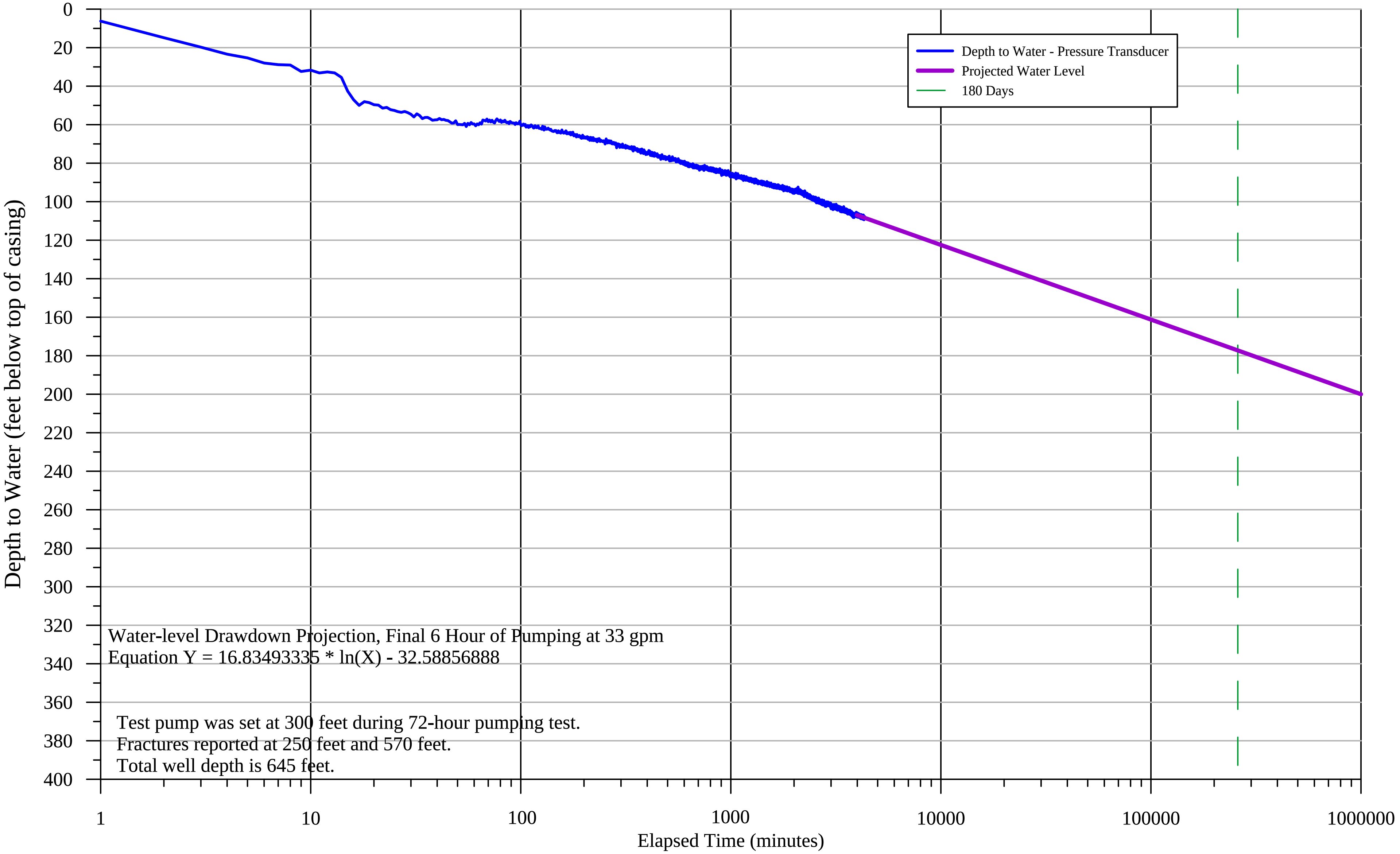

SUMMIT COUNTRY CLUB
568 BEDFORD ROAD
NORTH CASTLE, NEW YORK

Summary of Water-Level Measurements Collected from Pumping Well 3
During the 72-Hour Pumping Test Conducted on Wells 1, 3 and 6A, June 2022

Date	Time	Depth to Water (ft btoc)/ Drawdown (feet)	Elapsed Time (minutes)	Comments
6/16/2022	12:00	0.00	--	Pressure transducer installed in well.
6/16/2022	16:00	0.00	--	Well 3 flowing artesian.
6/16/2022	20:00	0.00	--	
6/17/2022	0:00	0.00	--	
6/17/2022	4:00	0.00	--	
6/17/2022	8:00	0.00	--	
6/17/2022	12:00	0.00	--	
6/17/2022	16:00	0.00	--	
6/17/2022	20:00	0.00	--	
6/18/2022	0:00	0.00	--	
6/18/2022	4:00	0.00	--	
6/18/2022	8:00	0.00	--	
6/18/2022	12:00	0.00	--	
6/18/2022	16:00	0.00	--	
6/18/2022	20:00	0.00	--	
6/19/2022	0:00	0.00	--	
6/19/2022	4:00	0.00	--	
6/19/2022	8:00	0.00	--	
6/19/2022	12:00	0.00	--	
6/19/2022	16:00	0.00	--	
6/19/2022	20:00	0.00	--	
6/20/2022	0:00	0.00	--	
6/20/2022	4:00	0.00	--	
6/20/2022	8:00	0.00	--	
6/20/2022	10:00	0.00	--	
6/20/2022	10:45	0.00	--	Pump in Well 6A started.
6/20/2022	11:00	0.00	--	
6/20/2022	12:00	0.00	--	
6/20/2022	12:21	0.00	--	Pump in Well 1 started.
6/20/2022	13:00	0.00	--	
6/20/2022	14:00	0.00	--	
6/20/2022	15:00	0.00	--	
6/20/2022	16:00	0.00	--	
6/20/2022	16:37	0.00	--	
6/20/2022	16:38	5.34	1	Pump in Well 3 started.
6/20/2022	16:39	13.95	2	Pumping rate adjusted to 38 gpm.
6/20/2022	16:40	18.86	3	
6/20/2022	16:41	22.51	4	
6/20/2022	16:42	24.44	5	Pumping rate 38 gpm.
6/20/2022	16:43	27.09	6	
6/20/2022	16:44	27.94	7	Pumping rate 38 gpm.
6/20/2022	16:45	28.16	8	
6/20/2022	16:46	31.48	9	Pumping rate 38 gpm.
6/20/2022	16:47	30.80	10	
6/20/2022	16:48	32.25	11	Pumping rate 38 gpm.
6/20/2022	16:49	31.72	12	
6/20/2022	16:50	32.22	13	Pumping rate 38 gpm.
6/20/2022	16:51	34.55	14	
6/20/2022	16:52	41.72	15	Pumping rate 38 gpm.
6/20/2022	16:57	48.75	20	
6/20/2022	17:02	51.72	25	Pumping rate 38 gpm.
6/20/2022	17:07	53.72	30	

SUMMIT COUNTRY CLUB
568 BEDFORD ROAD
NORTH CASTLE, NEW YORK

Summary of Water-Level Measurements Collected from Pumping Well 3
During the 72-Hour Pumping Test Conducted on Wells 1, 3 and 6A, June 2022

Date	Time	Depth to Water (ft btoc)/ Drawdown (feet)	Elapsed Time (minutes)	Comments
6/20/2022	17:12	55.37	35	Pumping rate 38 gpm.
6/20/2022	17:17	56.57	40	
6/20/2022	17:22	56.97	45	Pumping rate 38 gpm.
6/20/2022	17:27	59.07	50	
6/20/2022	17:32	60.08	55	Decreased rate to 36 gpm.
6/20/2022	17:37	58.72	60	
6/20/2022	18:00	57.65	83	Pumping rate 35 gpm.
6/20/2022	19:00	62.67	143	
6/20/2022	20:00	65.84	203	Pumping rate 35 gpm.
6/20/2022	21:00	68.47	263	
6/20/2022	22:00	70.89	323	Pumping rate 35 gpm.
6/20/2022	23:00	73.85	383	
6/21/2022	0:00	75.04	443	Pumping rate 33 gpm.
6/21/2022	1:00	77.08	503	
6/21/2022	2:00	77.66	563	Pumping rate 33 gpm.
6/21/2022	3:00	80.54	623	
6/21/2022	4:00	80.90	683	Pumping rate 33 gpm.
6/21/2022	5:00	81.39	743	
6/21/2022	6:00	81.40	803	Pumping rate 33 gpm.
6/21/2022	7:00	83.33	863	
6/21/2022	8:00	83.48	923	Pumping rate 33 gpm.
6/21/2022	9:00	85.07	983	
6/21/2022	10:00	85.10	1043	Pumping rate 33 gpm.
6/21/2022	11:00	86.54	1103	
6/21/2022	12:00	87.26	1163	Pumping rate 33 gpm.
6/21/2022	13:00	88.49	1223	
6/21/2022	14:00	88.33	1283	Pumping rate 33 gpm.
6/21/2022	15:00	89.09	1343	
6/21/2022	16:00	89.83	1403	Pumping rate 33 gpm.
6/21/2022	17:00	89.88	1463	
6/21/2022	18:00	89.44	1523	Pumping rate 33 gpm.
6/21/2022	19:00	91.31	1583	
6/21/2022	20:00	90.69	1643	Pumping rate 33 gpm.
6/21/2022	21:00	91.40	1703	
6/21/2022	22:00	90.62	1763	Pumping rate 33 gpm.
6/21/2022	23:00	91.86	1823	
6/22/2022	0:00	91.88	1883	Pumping rate 33 gpm.
6/22/2022	1:00	93.75	1943	
6/22/2022	2:00	94.30	2003	Pumping rate 33 gpm.
6/22/2022	3:00	93.83	2063	
6/22/2022	4:00	93.83	2123	Pumping rate 33 gpm.
6/22/2022	5:00	95.10	2183	
6/22/2022	6:00	96.09	2243	Pumping rate 33 gpm.
6/22/2022	7:00	95.61	2303	
6/22/2022	8:00	96.99	2363	Pumping rate 33 gpm.
6/22/2022	9:00	97.62	2423	
6/22/2022	10:00	98.07	2483	Pumping rate 33 gpm.
6/22/2022	11:00	98.85	2543	
6/22/2022	12:00	98.70	2603	Pumping rate 33 gpm.
6/22/2022	13:00	98.90	2663	
6/22/2022	14:00	99.54	2723	Pumping rate 33 gpm.
6/22/2022	15:00	100.23	2783	

SUMMIT COUNTRY CLUB
568 BEDFORD ROAD
NORTH CASTLE, NEW YORK

Summary of Water-Level Measurements Collected from Pumping Well 3
During the 72-Hour Pumping Test Conducted on Wells 1, 3 and 6A, June 2022

Date	Time	Depth to Water (ft btoc)/ Drawdown (feet)	Elapsed Time (minutes)	Comments
6/22/2022	16:00	100.61	2843	Pumping rate 33 gpm.
6/22/2022	17:00	100.18	2903	
6/22/2022	18:00	100.00	2963	Pumping rate 33 gpm.
6/22/2022	19:00	102.31	3023	
6/22/2022	20:00	102.26	3083	Pumping rate 33 gpm.
6/22/2022	21:00	101.98	3143	
6/22/2022	22:00	101.51	3203	Pumping rate 33 gpm.
6/22/2022	23:00	102.16	3263	
6/23/2022	0:00	103.74	3323	Pumping rate 33 gpm.
6/23/2022	1:00	102.56	3383	
6/23/2022	2:00	103.51	3443	Pumping rate 33 gpm.
6/23/2022	3:00	104.05	3503	
6/23/2022	4:00	104.30	3563	Pumping rate 33 gpm.
6/23/2022	5:00	104.44	3623	
6/23/2022	6:00	104.27	3683	Pumping rate 33 gpm.
6/23/2022	7:00	105.22	3743	
6/23/2022	8:00	106.37	3803	Pumping rate 33 gpm.
6/23/2022	9:00	105.78	3863	
6/23/2022	10:00	106.45	3923	Pumping rate 33 gpm.
6/23/2022	10:59	106.68	3982	Six hours prior to shut down of test.
6/23/2022	11:00	105.86	3983	Pumping rate 33 gpm.
6/23/2022	12:00	105.39	4043	
6/23/2022	13:00	105.88	4103	Pumping rate 33 gpm.
6/23/2022	14:00	106.74	4163	
6/23/2022	15:00	107.77	4223	Pumping rate 33 gpm.
6/23/2022	16:00	106.94	4283	
6/23/2022	16:59	107.77	4342	Pumping rate 33 gpm.
6/23/2022	17:00	100.17	-1	Pump in Well 3 shut down.
6/23/2022	17:01	87.02	-2	
6/23/2022	17:02	79.84	-3	
6/23/2022	17:03	76.14	-4	
6/23/2022	17:04	74.40	-5	
6/23/2022	17:05	73.49	-6	
6/23/2022	17:06	72.95	-7	
6/23/2022	17:07	72.51	-8	
6/23/2022	17:08	72.17	-9	
6/23/2022	17:09	71.90	-10	
6/23/2022	17:10	71.62	-11	
6/23/2022	17:11	71.40	-12	
6/23/2022	17:12	71.31	-13	
6/23/2022	17:13	71.01	-14	
6/23/2022	17:14	70.86	-15	
6/23/2022	17:19	70.10	-20	
6/23/2022	17:24	69.48	-25	
6/23/2022	17:29	68.90	-30	
6/23/2022	17:34	68.45	-35	
6/23/2022	17:39	67.91	-40	
6/23/2022	17:44	67.38	-45	
6/23/2022	17:49	66.94	-50	
6/23/2022	17:54	66.54	-55	
6/23/2022	17:59	66.06	-60	
6/23/2022	18:00	66.00	-61	

SUMMIT COUNTRY CLUB
568 BEDFORD ROAD
NORTH CASTLE, NEW YORK

Summary of Water-Level Measurements Collected from Pumping Well 3
During the 72-Hour Pumping Test Conducted on Wells 1, 3 and 6A, June 2022

Date	Time	Depth to Water (ft btoc)/ Drawdown (feet)	Elapsed Time (minutes)	Comments
6/23/2022	19:00	61.45	-121	
6/23/2022	20:00	57.61	-181	
6/23/2022	21:00	53.80	-241	
6/23/2022	22:00	50.37	-301	
6/23/2022	23:00	46.79	-361	
6/24/2022	0:00	43.66	-421	
6/24/2022	1:00	40.78	-481	
6/24/2022	2:00	38.08	-541	
6/24/2022	3:00	35.67	-601	
6/24/2022	4:00	33.57	-661	
6/24/2022	5:00	31.68	-721	
6/24/2022	6:00	29.60	-781	
6/24/2022	7:00	27.41	-841	
6/24/2022	8:00	25.49	-901	
6/24/2022	9:00	23.66	-961	
6/24/2022	10:00	21.91	-1021	
6/24/2022	11:00	20.15	-1081	
6/24/2022	12:00	18.53	-1141	
6/24/2022	13:00	16.91	-1201	
6/24/2022	14:00	15.25	-1261	
6/24/2022	15:00	13.84	-1321	
6/24/2022	16:00	12.50	-1381	
6/24/2022	17:00	11.15	-1441	
6/24/2022	17:16	10.75	-1457	90% recovered to pre-test level.
6/24/2022	18:00	9.83	-1501	
6/24/2022	19:00	8.61	-1561	
6/24/2022	20:00	7.47	-1621	
6/25/2022	0:00	3.63	-1861	
6/25/2022	4:00	0.53	-2101	
6/25/2022	8:00	0.00	-2341	Well 3 flowing artesian.
6/25/2022	12:00	0.00	-2581	
6/25/2022	16:00	0.00	-2821	
6/25/2022	20:00	0.00	-3061	
6/26/2022	0:00	0.00	-3301	
6/26/2022	4:00	0.00	-3541	
6/26/2022	8:00	0.00	-3781	
6/26/2022	12:00	0.00	-4021	
6/26/2022	16:00	0.00	-4261	
6/26/2022	20:00	0.00	-4501	
6/27/2022	0:00	0.00	-4741	
6/27/2022	4:00	0.00	-4981	
6/27/2022	8:00	0.00	-5221	
6/27/2022	12:00	0.00	-5461	
6/27/2022	16:00	0.00	-5701	
6/27/2022	20:00	0.00	-5941	
6/28/2022	0:00	0.00	-6181	
6/28/2022	4:00	0.00	-6421	
6/28/2022	8:00	0.00	-6661	Pressure transducer removed from well.

gpm	gallons per minute
ft btoc	feet below top of casing

WELL 6A

SUMMIT COUNTRY CLUB
568 BEDFORD ROAD
NORTH CASTLE, NEW YORK

Hydrograph of Water-Level Measurements Collected from Pumping Well 6A During the 72-Hour Pumping Test Conducted on Wells 1, 3 and 6A, June 2022

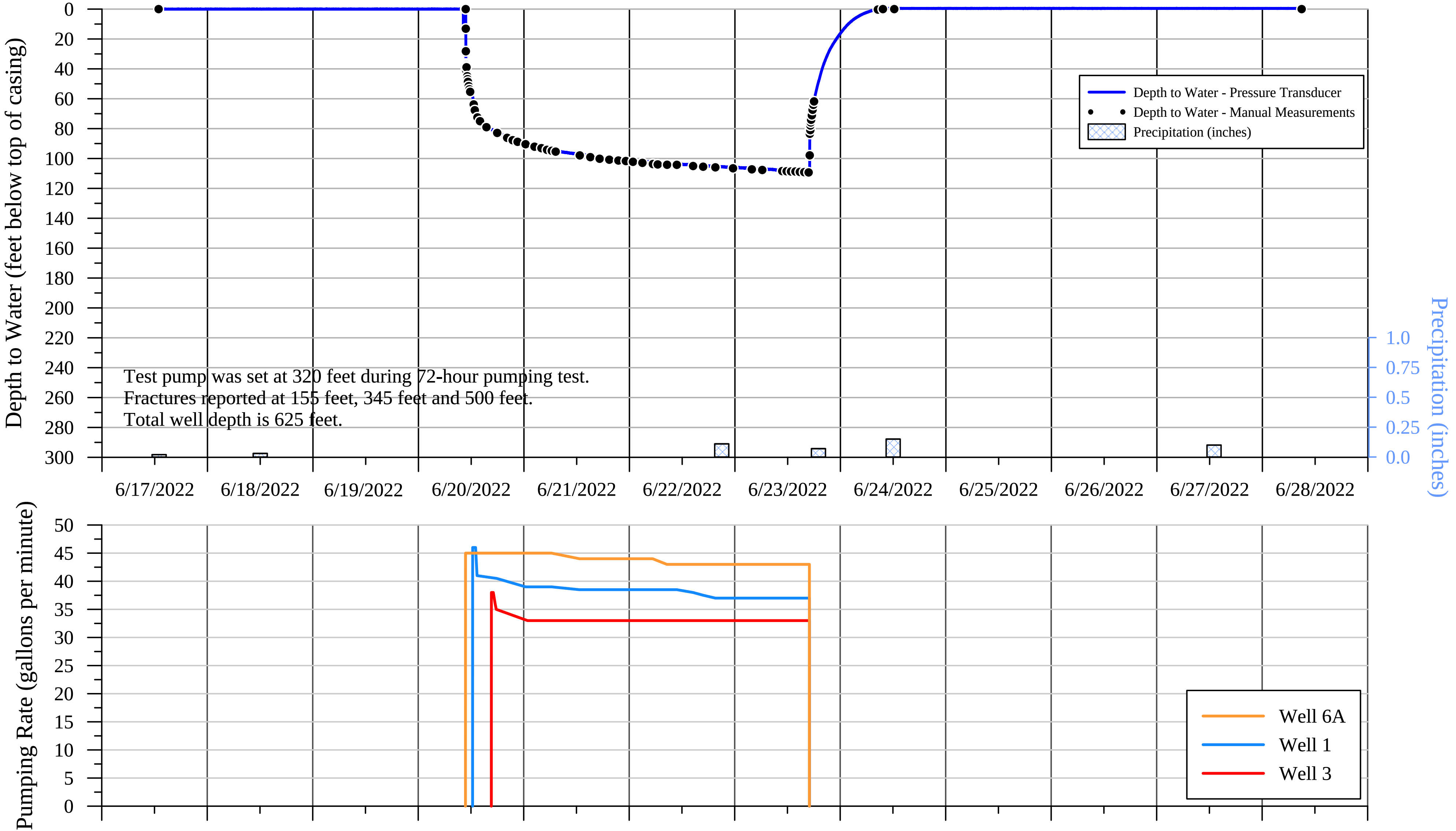

SUMMIT COUNTRY CLUB
568 BEDFORD ROAD
NORTH CASTLE, NEW YORK

180-Day Water-Level Drawdown Projection from Measurements Collected from Pumping Well 6A During the 72-Hour Pumping Test Conducted on Wells 1, 3 and 6A, June 2022

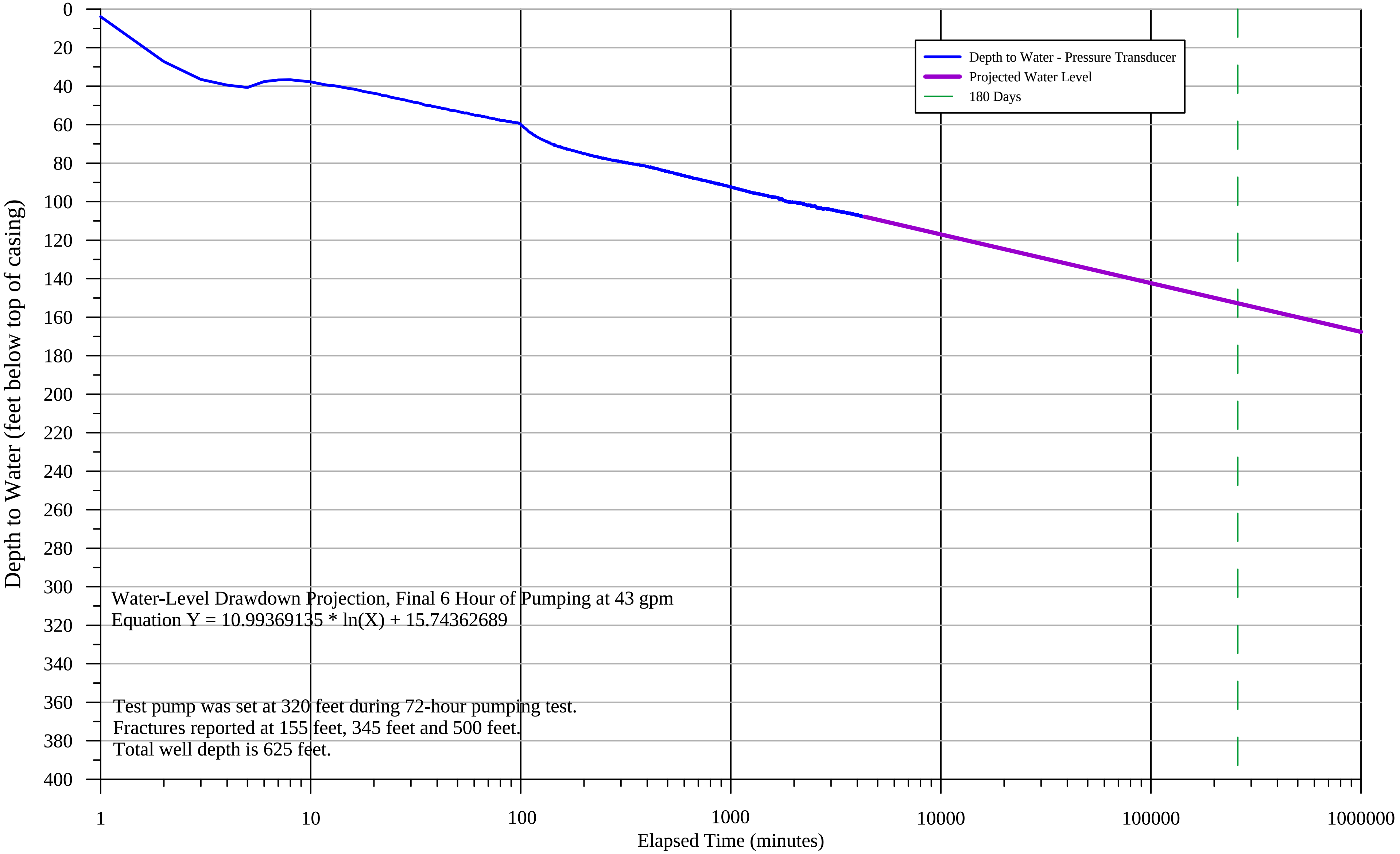

SUMMIT COUNTRY CLUB
568 BEDFORD ROAD
NORTH CASTLE, NEW YORK

Summary of Water-Level Measurements Collected from Pumping Well 6A
During the 72-Hour Pumping Test Conducted on Wells 1, 3 and 6A, June 2022

Date	Time	Depth to Water (ft btoc)/ Drawdown (feet)	Elapsed Time (minutes)	Comments
6/17/2022	16:00	0.00	--	Pressure transducer installed in well.
6/17/2022	20:00	0.00	--	Well 6A flowing artesian.
6/18/2022	0:00	0.00	--	
6/18/2022	4:00	0.00	--	
6/18/2022	8:00	0.00	--	
6/18/2022	12:00	0.00	--	
6/18/2022	16:00	0.00	--	
6/18/2022	20:00	0.00	--	
6/19/2022	0:00	0.00	--	
6/19/2022	4:00	0.00	--	
6/19/2022	8:00	0.00	--	
6/19/2022	12:00	0.00	--	
6/19/2022	16:00	0.00	--	
6/19/2022	20:00	0.00	--	
6/20/2022	0:00	0.00	--	
6/20/2022	4:00	0.00	--	
6/20/2022	8:00	0.00	--	
6/20/2022	10:44	0.00	--	
6/20/2022	10:45	3.81	1	Pump in Well 6A started.
6/20/2022	10:46	27.16	2	Pumping rate set at 45 gpm.
6/20/2022	10:47	36.42	3	
6/20/2022	10:48	39.36	4	
6/20/2022	10:49	40.59	5	Pumping rate 45 gpm.
6/20/2022	10:50	37.53	6	
6/20/2022	10:51	36.69	7	
6/20/2022	10:52	36.60	8	
6/20/2022	10:53	37.16	9	
6/20/2022	10:54	37.65	10	Pumping rate 45 gpm.
6/20/2022	10:55	38.61	11	
6/20/2022	10:56	39.39	12	
6/20/2022	10:57	39.71	13	
6/20/2022	10:58	40.35	14	
6/20/2022	10:59	40.99	15	Pumping rate 45 gpm.
6/20/2022	11:04	43.64	20	
6/20/2022	11:09	46.01	25	Pumping rate 45 gpm.
6/20/2022	11:14	47.83	30	
6/20/2022	11:19	49.77	35	Pumping rate 45 gpm.
6/20/2022	11:24	50.82	40	
6/20/2022	11:29	51.96	45	Pumping rate 45 gpm.
6/20/2022	11:34	52.91	50	
6/20/2022	11:39	53.78	55	Pumping rate 45 gpm.
6/20/2022	11:44	54.93	60	
6/20/2022	12:00	57.11	76	Pumping rate 45 gpm.
6/20/2022	12:21	58.98	97	Pump in Well 1 started.
6/20/2022	13:00	69.41	136	
6/20/2022	14:00	74.75	196	Pumping rate 45 gpm.
6/20/2022	15:00	77.68	256	
6/20/2022	16:00	79.75	316	Pumping rate 45 gpm.
6/20/2022	16:38	80.54	354	Pump in Well 3 started.
6/20/2022	17:00	80.93	376	
6/20/2022	18:00	82.59	436	Pumping rate 45 gpm.
6/20/2022	19:00	84.10	496	

SUMMIT COUNTRY CLUB
568 BEDFORD ROAD
NORTH CASTLE, NEW YORK

Summary of Water-Level Measurements Collected from Pumping Well 6A
During the 72-Hour Pumping Test Conducted on Wells 1, 3 and 6A, June 2022

Date	Time	Depth to Water (ft btoc)/ Drawdown (feet)	Elapsed Time (minutes)	Comments
6/20/2022	20:00	85.61	556	Pumping rate 45 gpm.
6/20/2022	21:00	86.79	616	
6/20/2022	22:00	87.82	676	Pumping rate 45 gpm.
6/20/2022	23:00	88.70	736	
6/21/2022	0:00	89.70	796	Pumping rate 45 gpm.
6/21/2022	1:00	90.56	856	
6/21/2022	2:00	91.36	916	Pumping rate 45 gpm.
6/21/2022	3:00	91.85	976	
6/21/2022	4:00	92.66	1036	Pumping rate 45 gpm.
6/21/2022	5:00	93.43	1096	
6/21/2022	6:00	94.04	1156	Pumping rate 45 gpm.
6/21/2022	7:00	94.80	1216	
6/21/2022	8:00	95.34	1276	Pumping rate 45 gpm.
6/21/2022	9:00	95.62	1336	
6/21/2022	10:00	96.17	1396	Pumping rate 45 gpm.
6/21/2022	11:00	96.66	1456	
6/21/2022	12:00	97.16	1516	Pumping rate 44 gpm.
6/21/2022	13:00	97.28	1576	
6/21/2022	14:00	97.73	1636	Pumping rate 44 gpm.
6/21/2022	15:00	98.68	1696	
6/21/2022	16:00	98.67	1756	Pumping rate 44 gpm.
6/21/2022	17:00	99.65	1816	
6/21/2022	18:00	100.02	1876	Pumping rate 44 gpm.
6/21/2022	19:00	100.48	1936	
6/21/2022	20:00	100.09	1996	Pumping rate 44 gpm.
6/21/2022	21:00	100.45	2056	
6/21/2022	22:00	100.54	2116	Pumping rate 44 gpm.
6/21/2022	23:00	100.67	2176	
6/22/2022	0:00	101.48	2236	Pumping rate 44 gpm.
6/22/2022	1:00	101.72	2296	
6/22/2022	2:00	101.84	2356	Pumping rate 44 gpm.
6/22/2022	3:00	102.13	2416	
6/22/2022	4:00	102.25	2476	Pumping rate 44 gpm.
6/22/2022	5:00	102.14	2536	
6/22/2022	6:00	103.07	2596	Pumping rate 44 gpm.
6/22/2022	7:00	103.40	2656	
6/22/2022	8:00	103.53	2716	Pumping rate 43 gpm.
6/22/2022	9:00	103.35	2776	
6/22/2022	10:00	103.35	2836	Pumping rate 43 gpm.
6/22/2022	11:00	103.74	2896	
6/22/2022	12:00	103.98	2956	Pumping rate 43 gpm.
6/22/2022	13:00	103.82	3016	
6/22/2022	14:00	104.32	3076	Pumping rate 43 gpm.
6/22/2022	15:00	104.45	3136	
6/22/2022	16:00	104.66	3196	Pumping rate 43 gpm.
6/22/2022	17:00	104.85	3256	
6/22/2022	18:00	105.06	3316	Pumping rate 43 gpm.
6/22/2022	19:00	105.18	3376	
6/22/2022	20:00	105.41	3436	Pumping rate 43 gpm.
6/22/2022	21:00	105.46	3496	
6/22/2022	22:00	105.63	3556	Pumping rate 43 gpm.
6/22/2022	23:00	105.80	3616	

SUMMIT COUNTRY CLUB
568 BEDFORD ROAD
NORTH CASTLE, NEW YORK

Summary of Water-Level Measurements Collected from Pumping Well 6A
During the 72-Hour Pumping Test Conducted on Wells 1, 3 and 6A, June 2022

Date	Time	Depth to Water (ft btoc)/ Drawdown (feet)	Elapsed Time (minutes)	Comments
6/23/2022	0:00	105.93	3676	Pumping rate 43 gpm.
6/23/2022	1:00	106.14	3736	
6/23/2022	2:00	106.28	3796	Pumping rate 43 gpm.
6/23/2022	3:00	106.45	3856	
6/23/2022	4:00	106.70	3916	Pumping rate 43 gpm.
6/23/2022	5:00	106.86	3976	
6/23/2022	6:00	106.94	4036	Pumping rate 43 gpm.
6/23/2022	7:00	107.10	4096	
6/23/2022	8:00	107.44	4156	Pumping rate 43 gpm.
6/23/2022	9:00	107.40	4216	
6/23/2022	10:00	107.73	4276	Pumping rate 43 gpm.
6/23/2022	10:59	107.62	4335	Six hour prior to shut down of test.
6/23/2022	11:00	107.75	4336	Pumping rate 43 gpm.
6/23/2022	12:00	107.74	4396	
6/23/2022	13:00	107.95	4456	Pumping rate 43 gpm.
6/23/2022	14:00	108.23	4516	
6/23/2022	15:00	108.56	4576	Pumping rate 43 gpm.
6/23/2022	16:00	108.61	4636	
6/23/2022	16:59	108.72	4695	Pumping rate 43 gpm.
6/23/2022	17:00	91.23	-1	Pump in Well 6A shut down.
6/23/2022	17:01	84.66	-2	
6/23/2022	17:02	82.34	-3	
6/23/2022	17:03	81.20	-4	
6/23/2022	17:04	80.53	-5	
6/23/2022	17:05	79.84	-6	
6/23/2022	17:06	79.16	-7	
6/23/2022	17:07	78.71	-8	
6/23/2022	17:08	78.24	-9	
6/23/2022	17:09	77.67	-10	
6/23/2022	17:10	77.23	-11	
6/23/2022	17:11	76.78	-12	
6/23/2022	17:12	76.44	-13	
6/23/2022	17:13	76.06	-14	
6/23/2022	17:14	75.67	-15	
6/23/2022	17:19	73.76	-20	
6/23/2022	17:24	72.12	-25	
6/23/2022	17:29	70.15	-30	
6/23/2022	17:34	68.52	-35	
6/23/2022	17:39	67.03	-40	
6/23/2022	17:44	65.46	-45	
6/23/2022	17:49	64.22	-50	
6/23/2022	17:54	62.82	-55	
6/23/2022	17:59	61.60	-60	
6/23/2022	18:00	61.26	-61	
6/23/2022	19:00	48.72	-121	
6/23/2022	20:00	38.46	-181	
6/23/2022	21:00	30.81	-241	
6/23/2022	22:00	25.11	-301	
6/23/2022	23:00	20.30	-361	
6/24/2022	0:00	16.11	-421	
6/24/2022	1:00	12.58	-481	
6/24/2022	1:30	10.85	-511	90% recovery to pre-test level.

SUMMIT COUNTRY CLUB
568 BEDFORD ROAD
NORTH CASTLE, NEW YORK

Summary of Water-Level Measurements Collected from Pumping Well 6A During the 72-Hour Pumping Test Conducted on Wells 1, 3 and 6A, June 2022

Date	Time	Depth to Water (ft btoc)/ Drawdown (feet)	Elapsed Time (minutes)	Comments
6/24/2022	2:00	9.31	-541	
6/24/2022	3:00	6.83	-601	
6/24/2022	4:00	5.00	-661	
6/24/2022	5:00	3.42	-721	
6/24/2022	6:00	2.25	-781	
6/24/2022	7:00	1.15	-841	
6/24/2022	8:00	0.30	-901	
6/24/2022	9:00	0.00	-961	Artesian flow resumed in Well 6A.
6/24/2022	10:00	0.00	-1021	
6/24/2022	11:00	0.00	-1081	
6/24/2022	12:00	0.00	-1141	
6/24/2022	16:00	0.00	-1381	
6/24/2022	20:00	0.00	-1621	
6/25/2022	0:00	0.00	-1861	
6/25/2022	4:00	0.00	-2101	
6/25/2022	8:00	0.00	-2341	
6/25/2022	12:00	0.00	-2581	
6/25/2022	16:00	0.00	-2821	
6/25/2022	20:00	0.00	-3061	
6/26/2022	0:00	0.00	-3301	
6/26/2022	4:00	0.00	-3541	
6/26/2022	8:00	0.00	-3781	
6/26/2022	12:00	0.00	-4021	
6/26/2022	16:00	0.00	-4261	
6/26/2022	20:00	0.00	-4501	
6/27/2022	0:00	0.00	-4741	
6/27/2022	4:00	0.00	-4981	
6/27/2022	8:00	0.00	-5221	
6/27/2022	12:00	0.00	-5461	
6/27/2022	16:00	0.00	-5701	
6/27/2022	20:00	0.00	-5941	
6/28/2022	0:00	0.00	-6181	
6/28/2022	4:00	0.00	-6421	
6/28/2022	8:00	0.00	-6661	Pressure transducer removed from well.

gpm	gallons per minute
ft btoc	feet below top of casing

APPENDIX IV

SUMMIT COUNTRY CLUB
568 BEDFORD ROAD
NORTH CASTLE, NEW YORK

Hydrograph of Water-Level Measurements Collected from Well 2B During the 72-Hour Pumping Test Conducted on Wells 1, 3 and 6A, June 2022

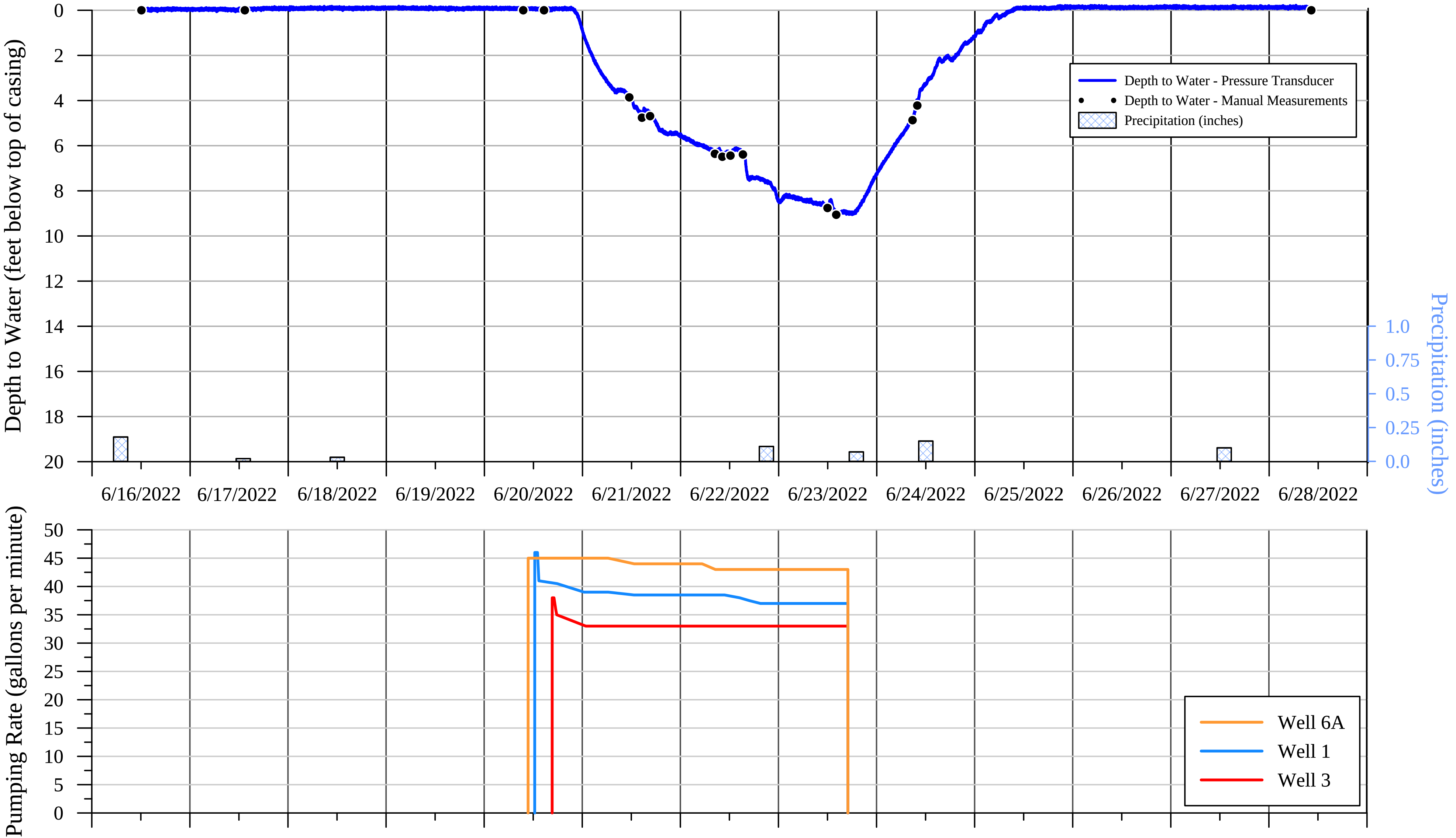

SUMMIT COUNTRY CLUB
568 BEDFORD ROAD
NORTH CASTLE, NEW YORK

Hydrograph of Artesian Discharge Rate Measurements Collected from Well 5 During the 72-Hour Pumping Test Conducted on Wells 1, 3 and 6A, June 2022

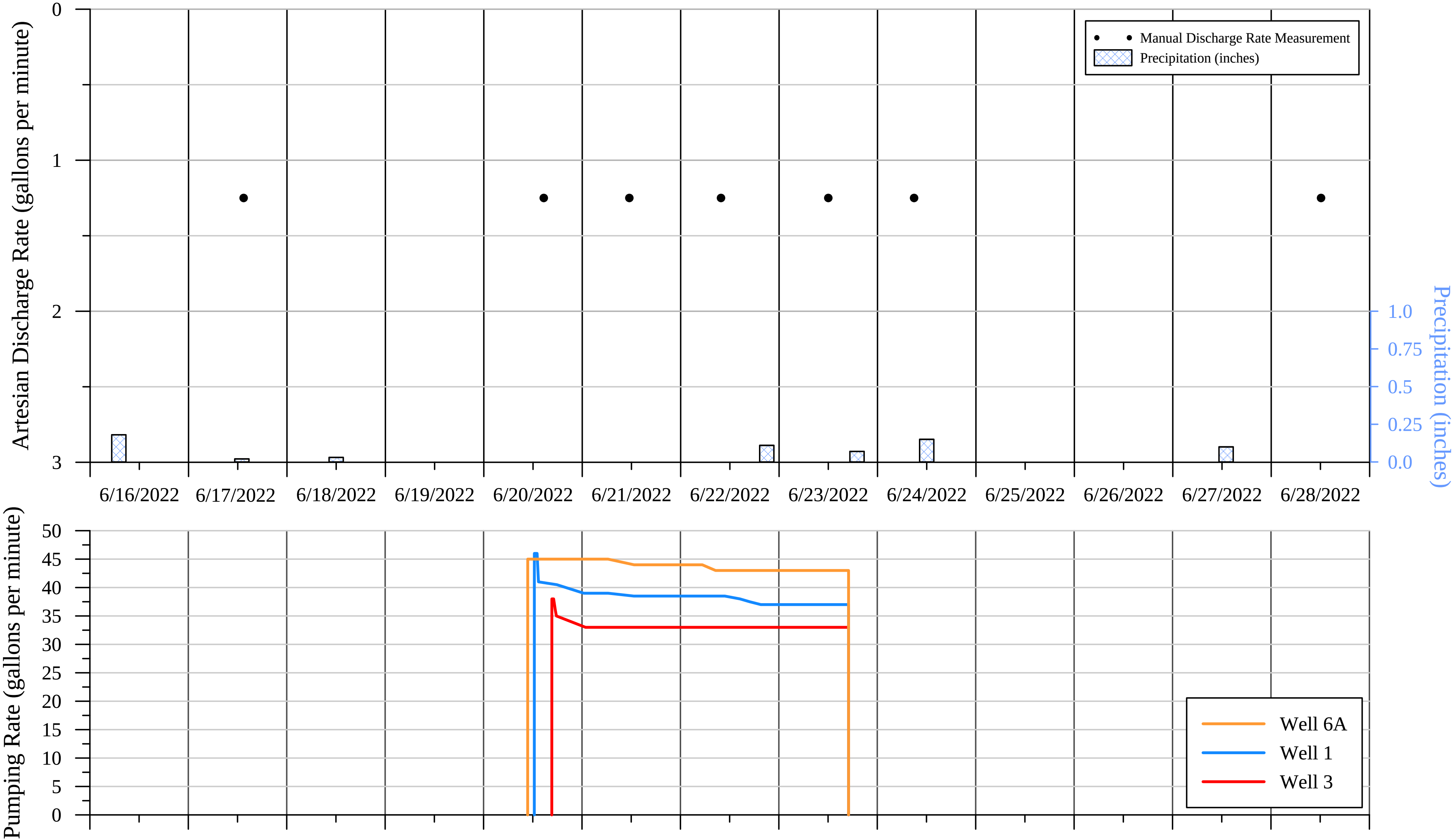

SUMMIT COUNTRY CLUB
568 BEDFORD ROAD
NORTH CASTLE, NEW YORK

Hydrograph of Water-Level Measurements Collected from Well 9 During the 72-Hour Pumping Test Conducted on Wells 1, 3 and 6A, June 2022

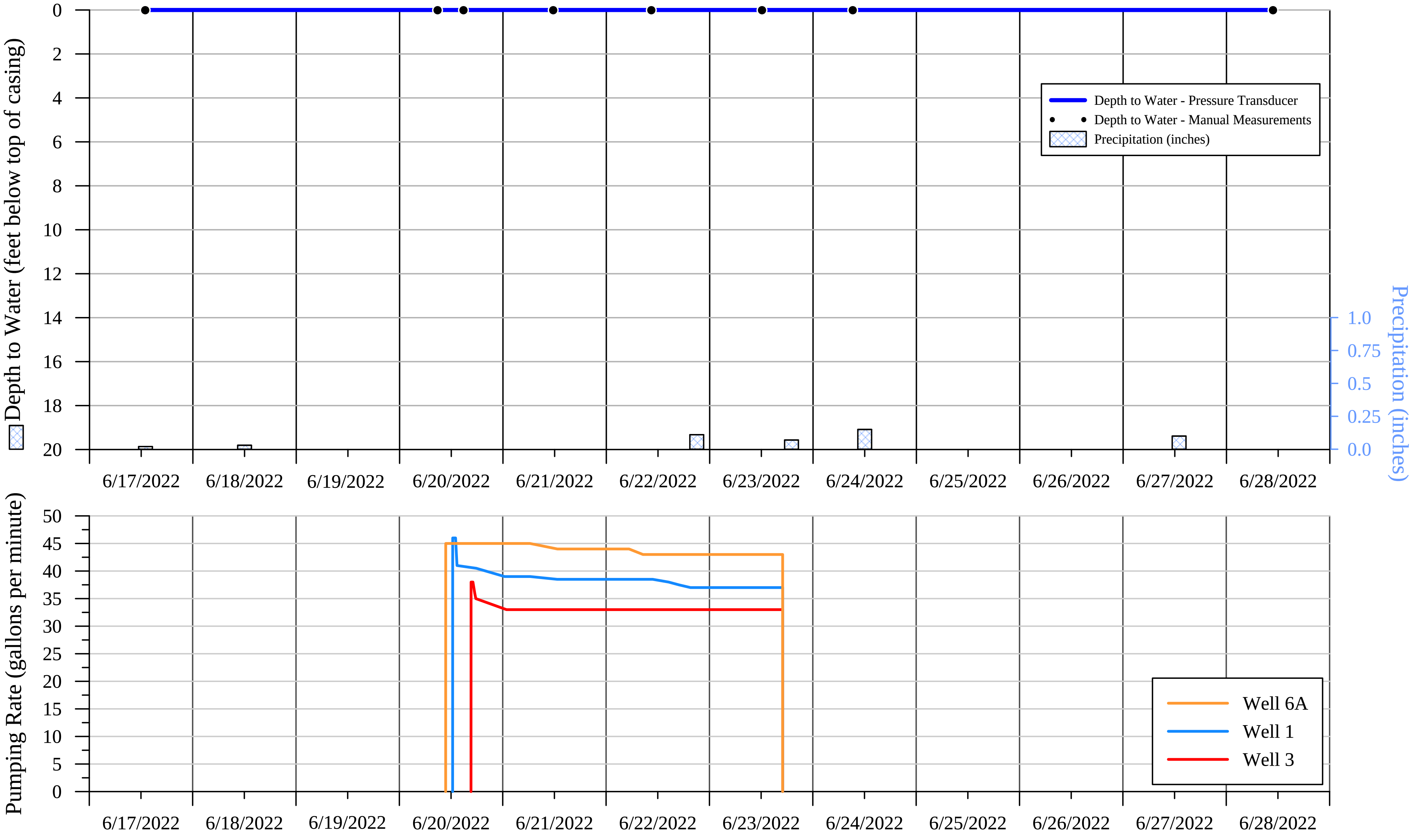

SUMMIT COUNTRY CLUB
568 BEDFORD ROAD
NORTH CASTLE, NEW YORK

Hydrograph of Water-Level Measurements Collected from Well 10
During the 72-Hour Pumping Test Conducted on Wells 1, 3 and 6A, June 2022

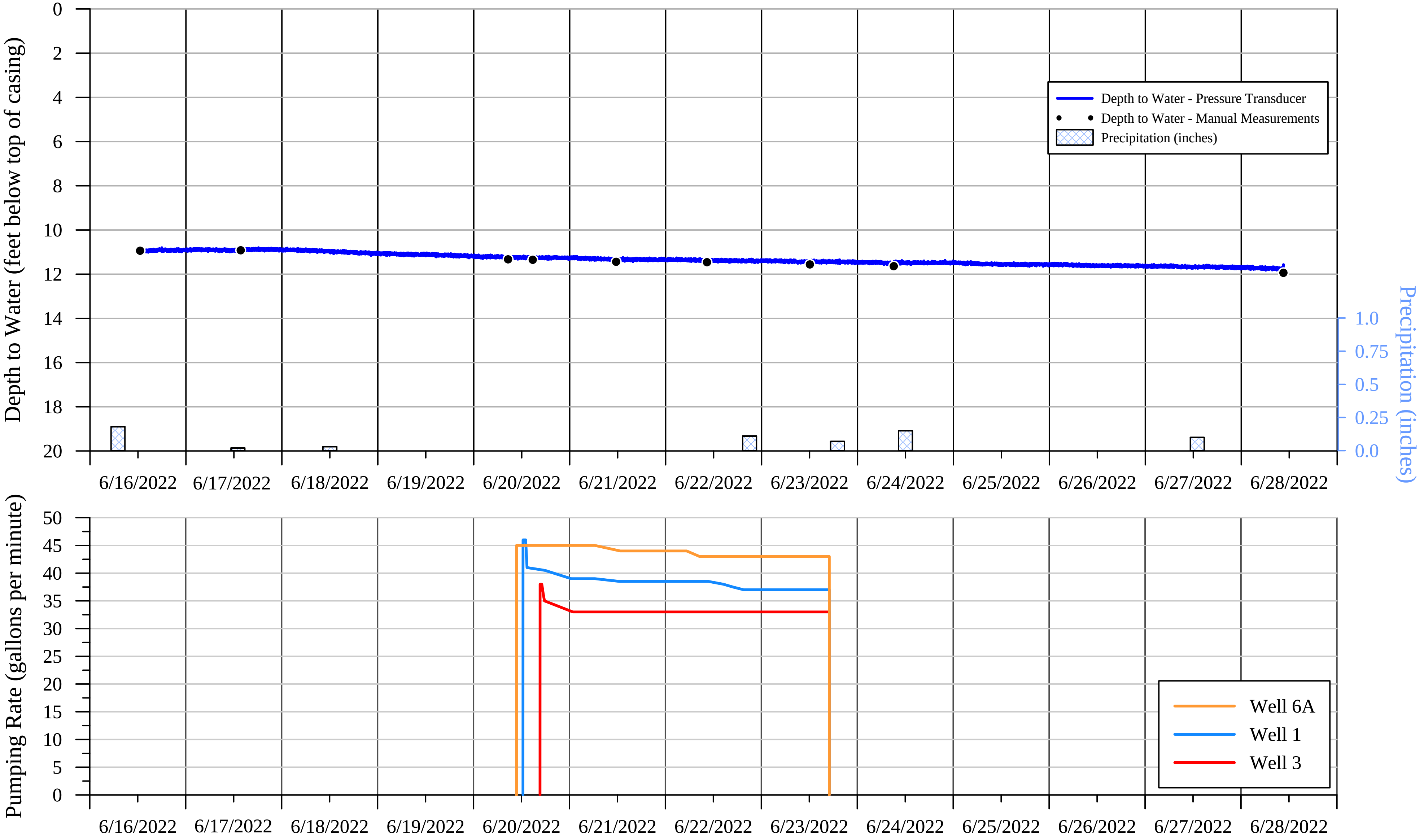

SUMMIT COUNTRY CLUB
568 BEDFORD ROAD
NORTH CASTLE, NEW YORK

Hydrograph of Water-Level Measurements Collected from Former Irrigation Well 3 During the 72-Hour Pumping Test Conducted on Wells 1, 3 and 6A, June 2022

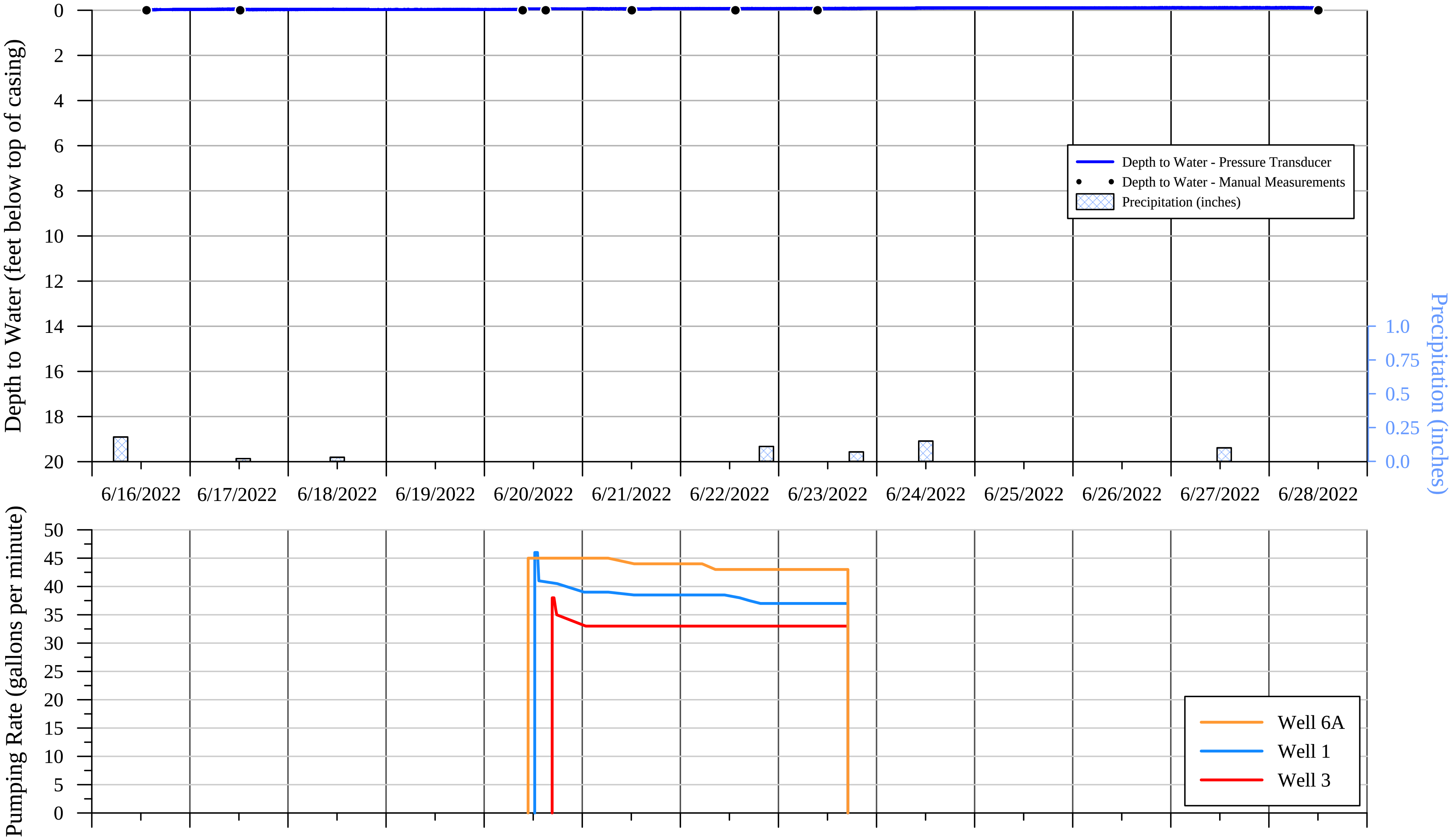

SUMMIT COUNTRY CLUB
568 BEDFORD ROAD
NORTH CASTLE, NEW YORK

Hydrograph of Water-Level Measurements Collected from Irrigation Well 4 During the 72-Hour Pumping Test Conducted on Wells 1, 3 and 6A, June 2022

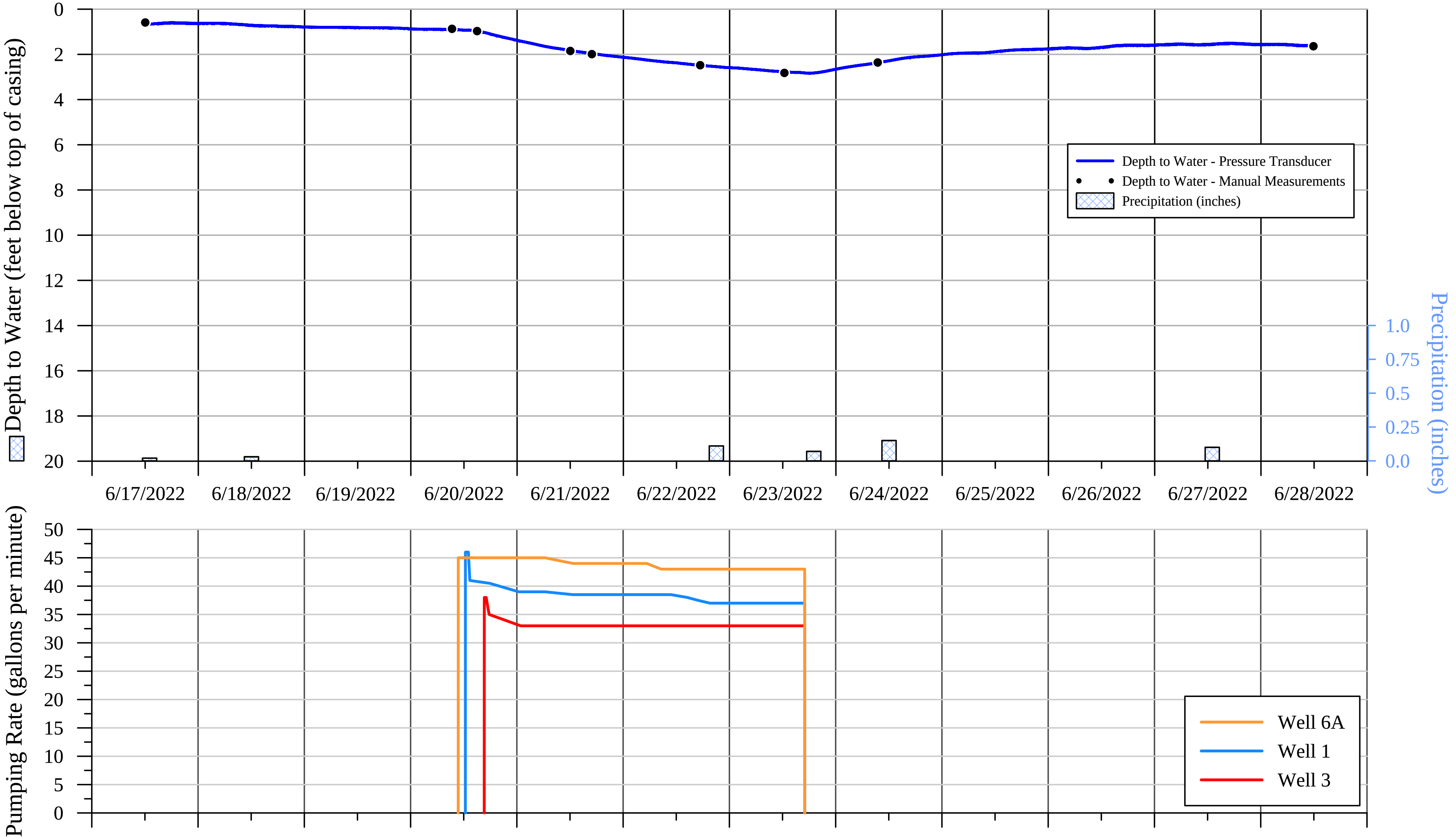

SUMMIT COUNTRY CLUB
568 BEDFORD ROAD
NORTH CASTLE, NEW YORK

Hydrograph of Water-Level Measurements Collected from Irrigation Well 5 During the 72-Hour Pumping Test Conducted on Wells 1, 3 and 6A, June 2022

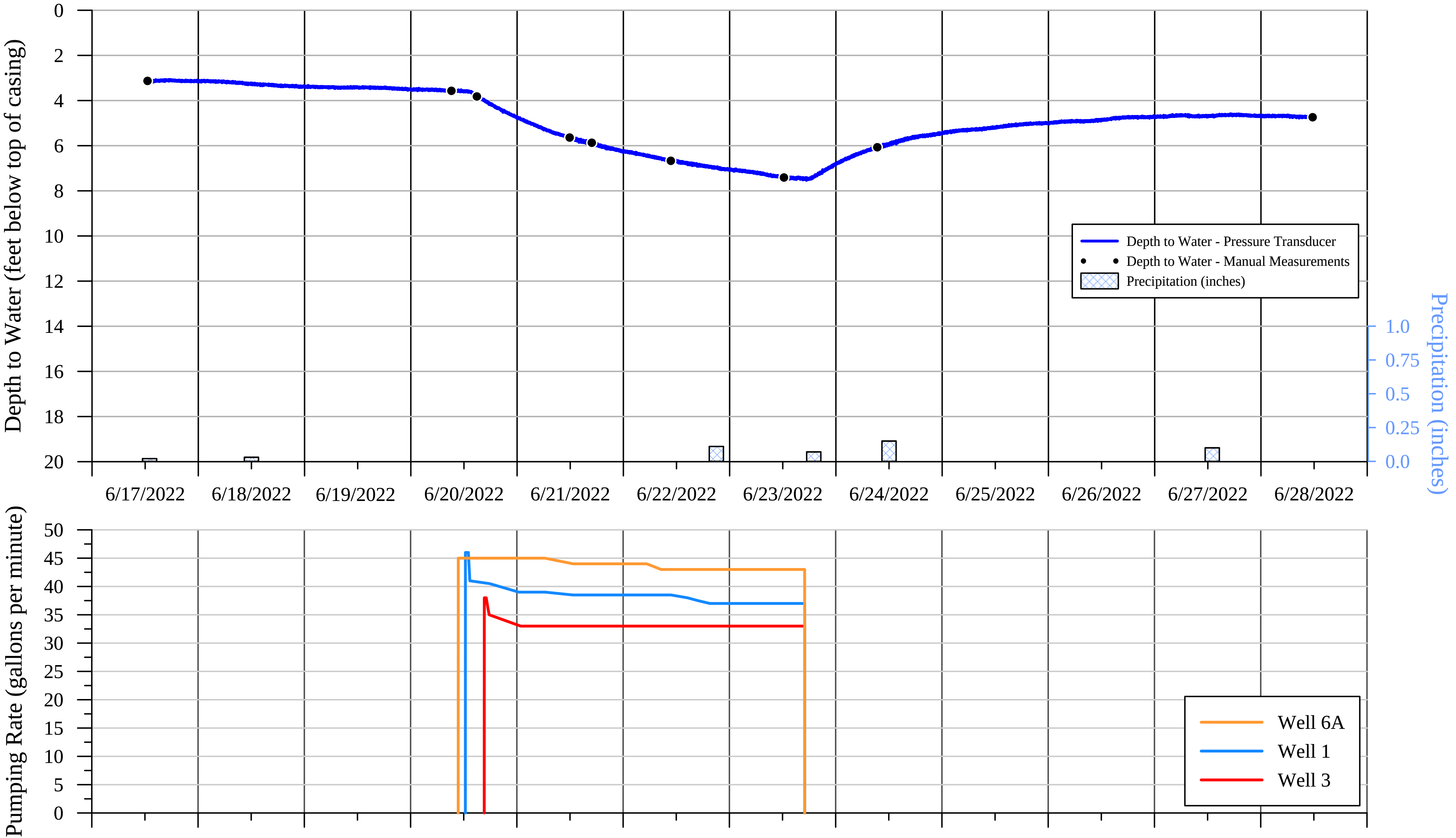

SUMMIT COUNTRY CLUB
568 BEDFORD ROAD
NORTH CASTLE, NEW YORK

Manual Water-Level Measurements Collected from Onsite Monitoring Wells
During the 72-Hour Pumping Test Conducted on Wells 1, 3 and 6A, June 2022

Date/Time	Level Depth to Water (ft btoc)
Well 2B	
6/16/2022 11:54	0[1/]
6/16/2022 12:05	0[1/]
6/17/2022 13:23	0[1/]
6/20/2022 9:30	0[1/]
6/20/2022 14:35	0[1/]
6/21/2022 11:27	3.86
6/21/2022 14:33	4.76
6/21/2022 16:32	4.69
6/22/2022 8:24	6.36
6/22/2022 10:13	6.49
6/22/2022 12:12	6.44
6/22/2022 15:15	6.39
6/23/2022 11:57	8.76
6/23/2022 14:05	9.06
6/24/2022 8:45	4.87
6/24/2022 9:55	4.22
6/28/2022 10:19	0[1/]
Former Irrigation Well 3	
6/16/2022 13:20	0[1/]
6/17/2022 12:15	0[1/]
6/20/2022 9:22	0[1/]
6/20/2022 15:00	0[1/]
6/21/2022 12:04	0[1/]
6/22/2022 13:25	0[1/]
6/23/2022 9:31	0[1/]
6/28/2022 12:03	0[1/]
Irrigation Well 4	
6/17/2022 12:01	0.59
6/20/2022 9:18	0.87
6/20/2022 14:58	0.97
6/21/2022 12:01	1.85
6/21/2022 16:53	1.99
6/22/2022 17:21	2.48
6/23/2022 12:22	2.82
6/24/2022 9:27	2.36
6/28/2022 11:51	1.64
Irrigation Well 5	
6/17/2022 12:22	3.13
6/17/2022 12:32	3.13
6/20/2022 9:10	3.57
6/20/2022 14:55	3.82
6/21/2022 11:52	5.64
6/21/2022 16:52	5.87
6/22/2022 10:43	6.67
6/23/2022 12:16	7.41
6/24/2022 9:21	6.07
6/28/2022 11:40	4.74
Well 9	
6/17/2022 12:56	0.01
6/20/2022 8:49	0.01
6/20/2022 14:50	0.01

SUMMIT COUNTRY CLUB
568 BEDFORD ROAD
NORTH CASTLE, NEW YORK

Manual Water-Level Measurements Collected from Onsite Monitoring Wells During the 72-Hour Pumping Test Conducted on Wells 1, 3 and 6A, June 2022

Date/Time	**Level Depth to Water (ft btoc)**
Well 9 (continued)	
6/21/2022 11:40	0.01
6/22/2022 10:27	0.01
6/23/2022 12:09	0.01
6/24/2022 9:13	0.01
6/28/2022 10:48	0.01
Well 10	
6/16/2022 12:32	10.94
6/17/2022 13:42	10.92
6/20/2022 8:35	11.33
6/20/2022 14:45	11.35
6/21/2022 11:37	11.44
6/22/2022 10:21	11.46
6/23/2022 12:05	11.56
6/24/2022 9:04	11.64
6/28/2022 10:33	11.94
Date/Time	**Discharge Rate (gpm)[1/]**
Well 5	
6/17/2022 13:26	1.25
6/20/2022 14:37	1.25
6/21/2022 11:29	1.25
6/22/2022 9:50	1.25
6/23/2022 12:00	1.25
6/24/2022 8:55	1.25
6/28/2022 12:09	1.25

ft btoc	feet below top of casing
gpm	gallons per minute
[1/]	Well flowing artesian.

K:\Jobs\Brynwood\2022\72 Hour Pumping Test\Report\Onsite MW WL table.doc

APPENDIX V

SUMMIT COUNTRY CLUB
568 BEDFORD ROAD
NORTH CASTLE, NEW YORK

Hydrograph of Water-Level Measurements Collected from Well Located at 4 Norman Place During the 72-Hour Pumping Test Conducted on Wells 1, 3 and 6A, June 2022

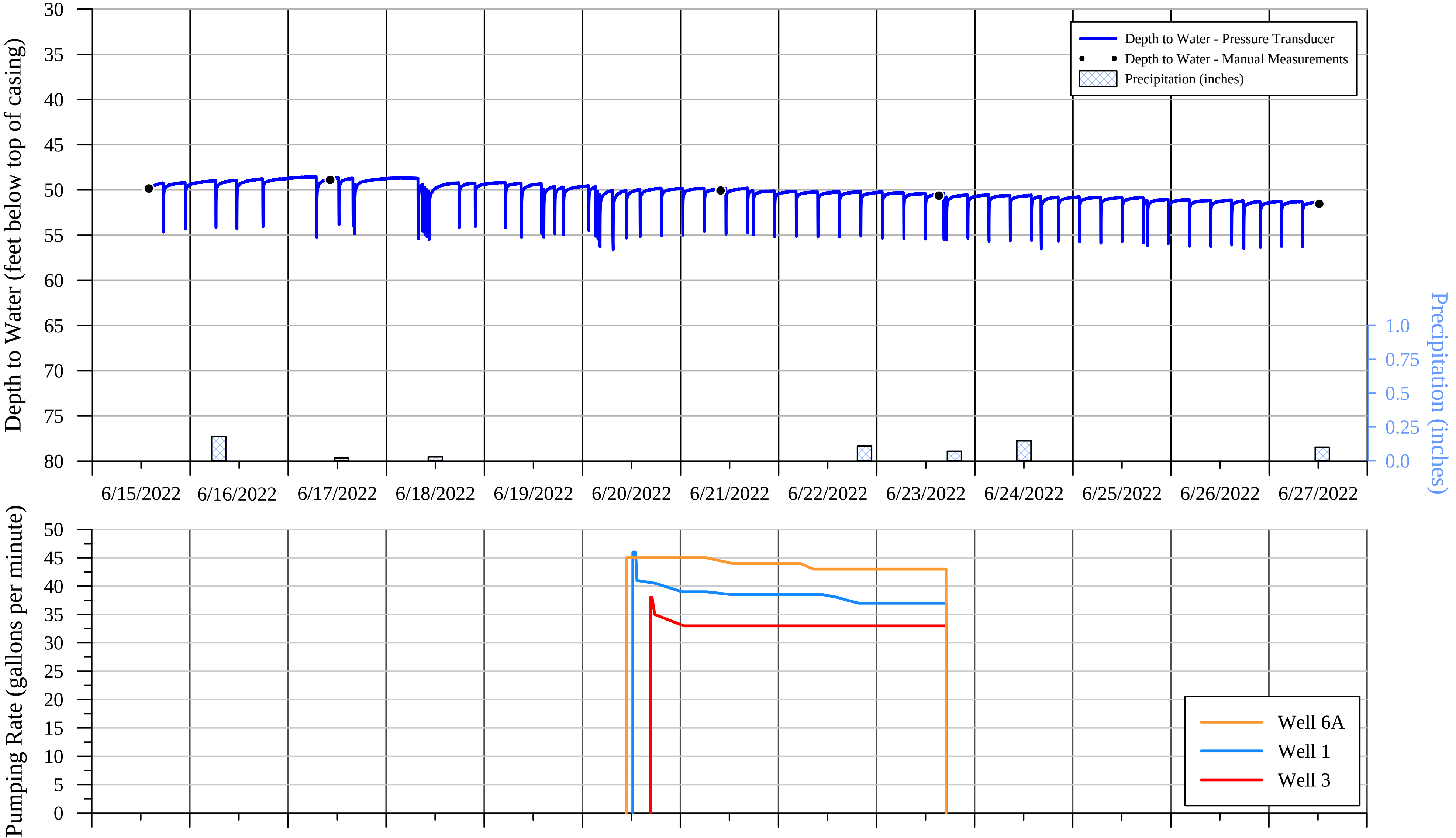

SUMMIT COUNTRY CLUB
568 BEDFORD ROAD
NORTH CASTLE, NEW YORK

Hydrograph of Water-Level Measurements Collected from Well Located at 6 Byram Hill Road During the 72-Hour Pumping Test Conducted on Wells 1, 3 and 6A, June 2022

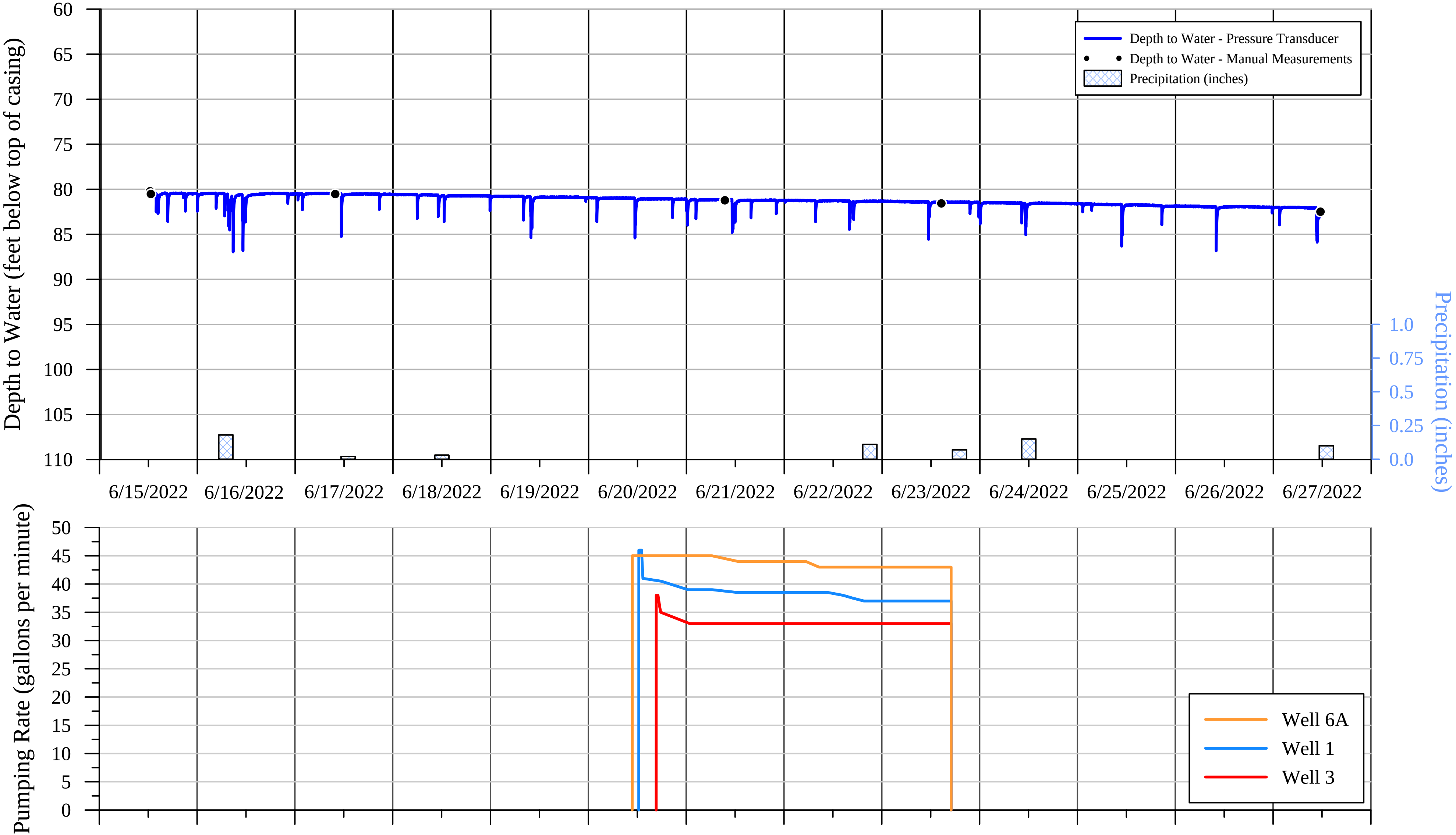

SUMMIT COUNTRY CLUB
568 BEDFORD ROAD
NORTH CASTLE, NEW YORK

Hydrograph of Water-Level Measurements Collected from Well Located at 8 Colonial Court During the 72-Hour Pumping Test Conducted on Wells 1, 3 and 6A, June 2022

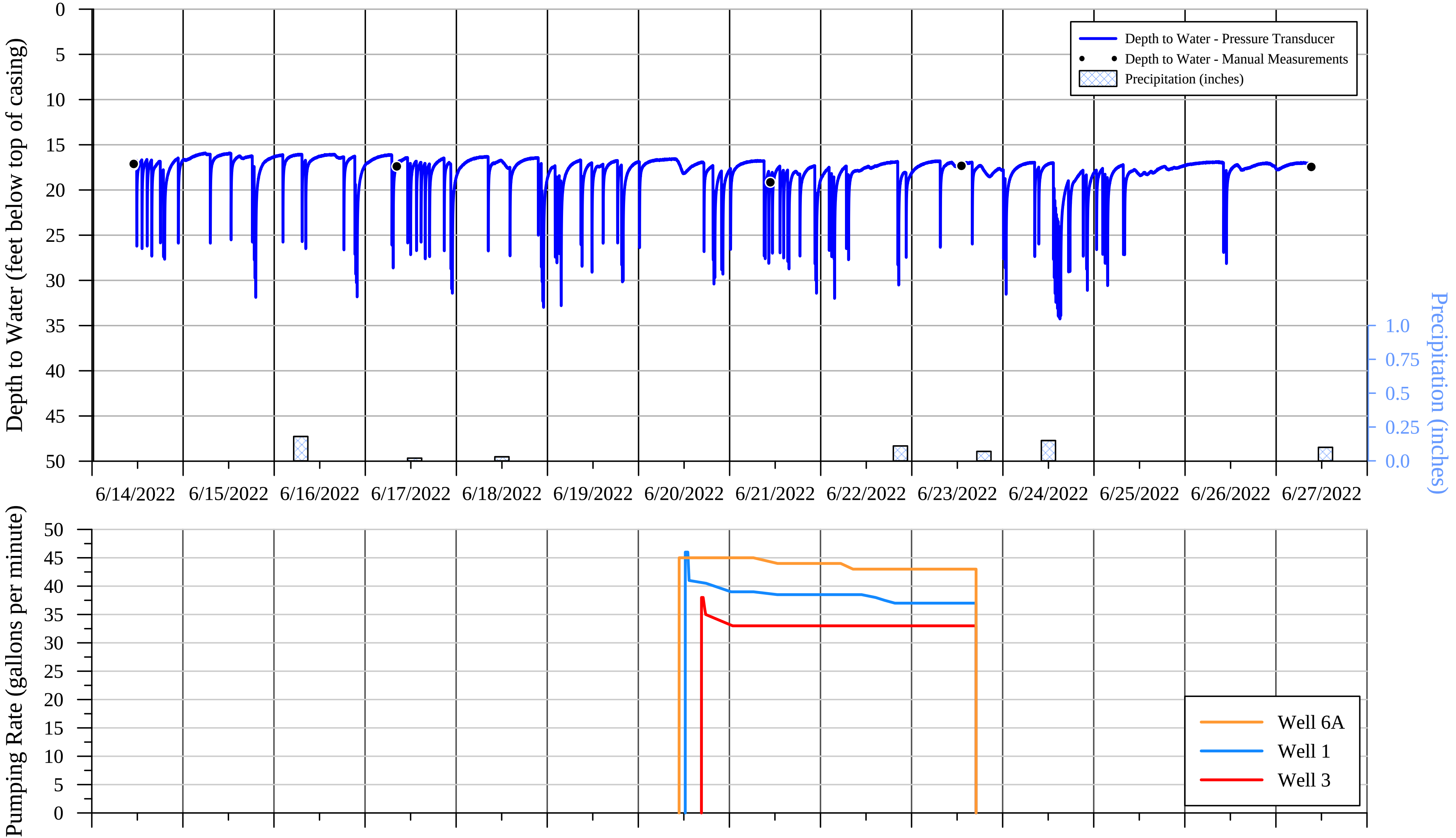

SUMMIT COUNTRY CLUB
568 BEDFORD ROAD
NORTH CASTLE, NEW YORK

Hydrograph of Water-Level Measurements Collected from Well Located at 8 Embassy Court During the 72-Hour Pumping Test Conducted on Wells 1, 3 and 6A, June 2022

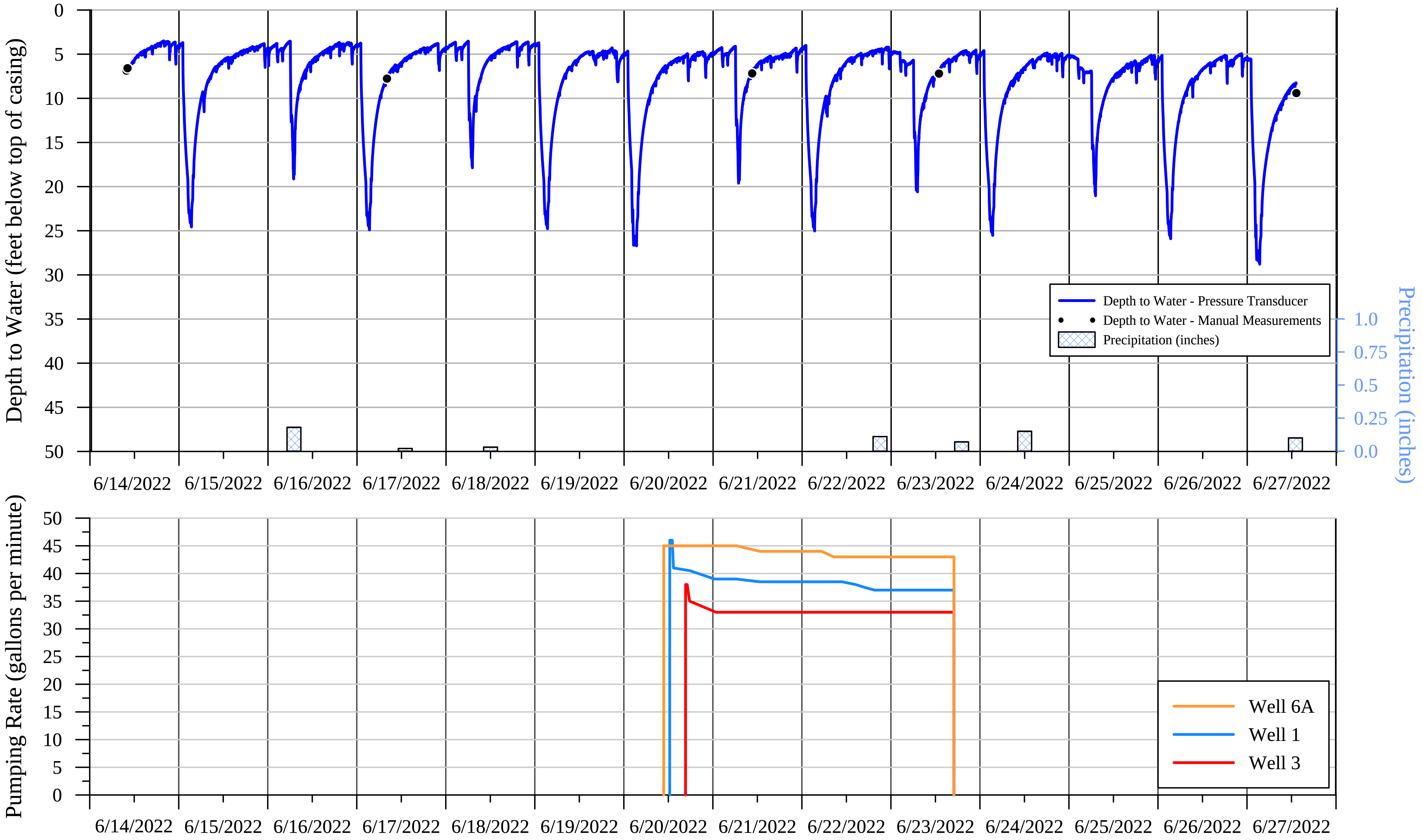

SUMMIT COUNTRY CLUB
568 BEDFORD ROAD
NORTH CASTLE, NEW YORK

Hydrograph of Water-Level Measurements Collected from Well Located at 8 Evans Place During the 72-Hour Pumping Test Conducted on Wells 1, 3 and 6A, June 2022

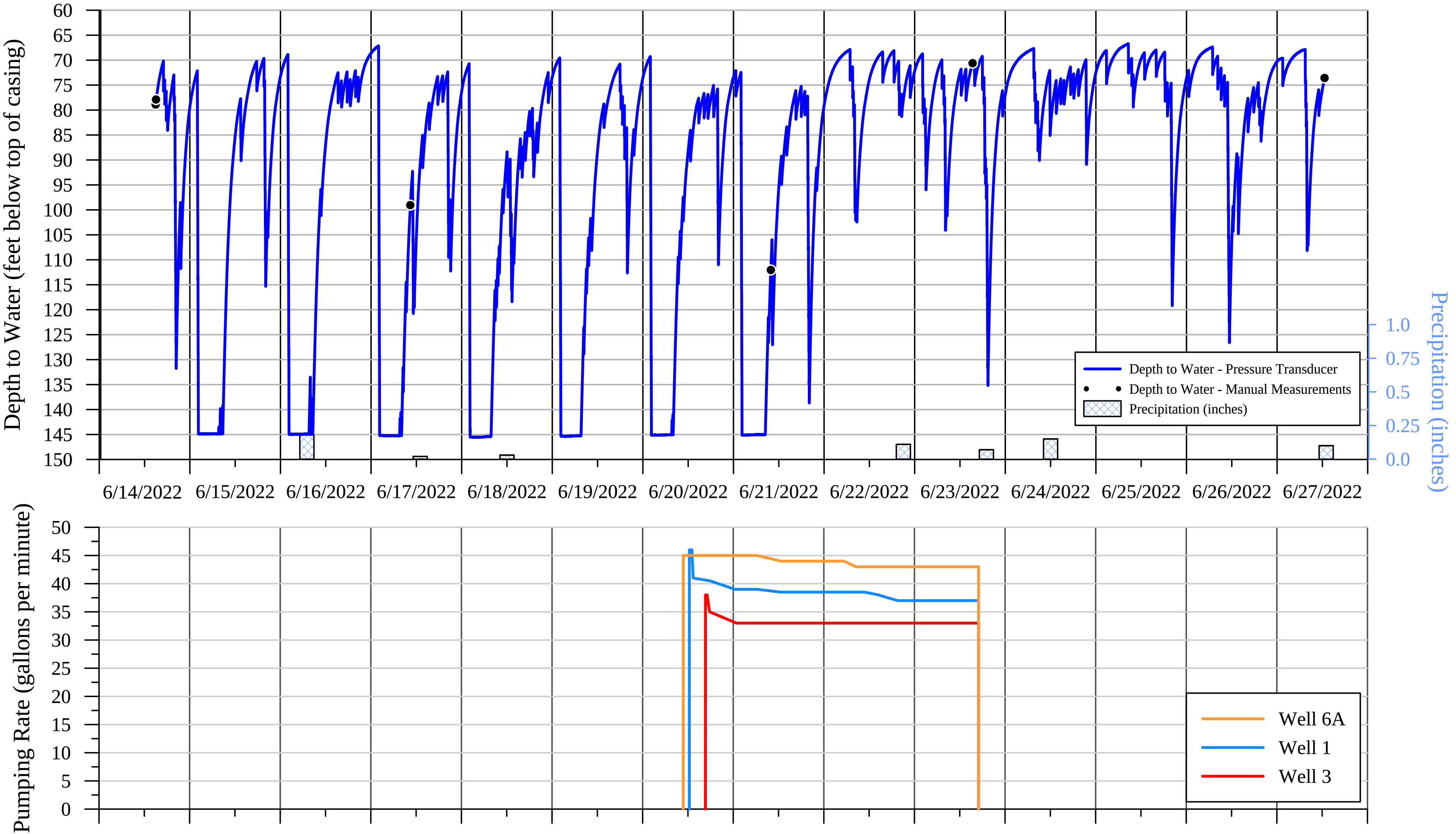

SUMMIT COUNTRY CLUB
568 BEDFORD ROAD
NORTH CASTLE, NEW YORK

Hydrograph of Water-Level Measurements Collected from Well Located at 10 Byram Hill Road During the 72-Hour Pumping Test Conducted on Wells 1, 3 and 6A, June 2022

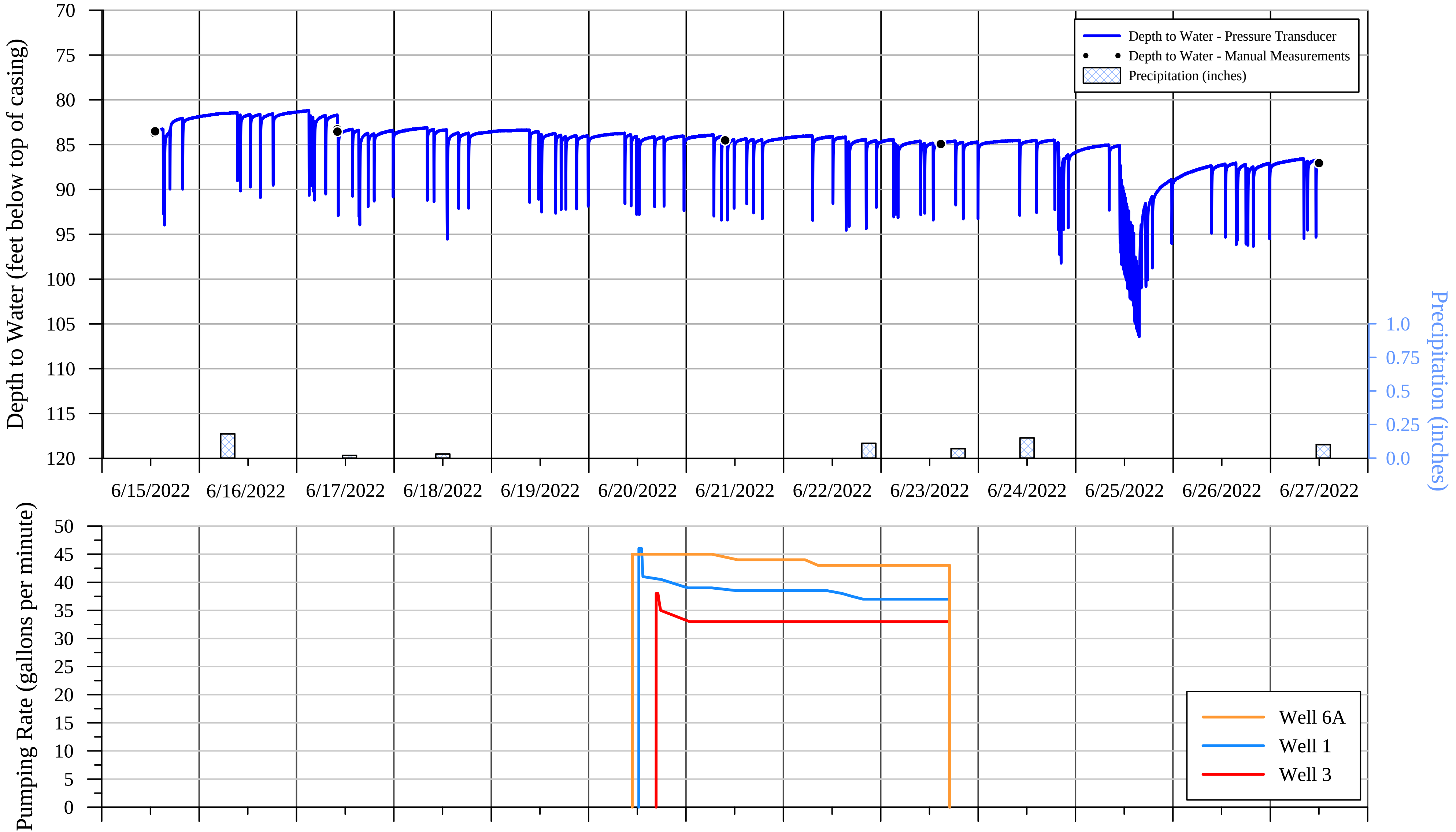

SUMMIT COUNTRY CLUB
568 BEDFORD ROAD
NORTH CASTLE, NEW YORK

Hydrograph of Water-Level Measurements Collected from Well Located at 10 Willow Pond Lane During the 72-Hour Pumping Test Conducted on Wells 1, 3 and 6A, June 2022

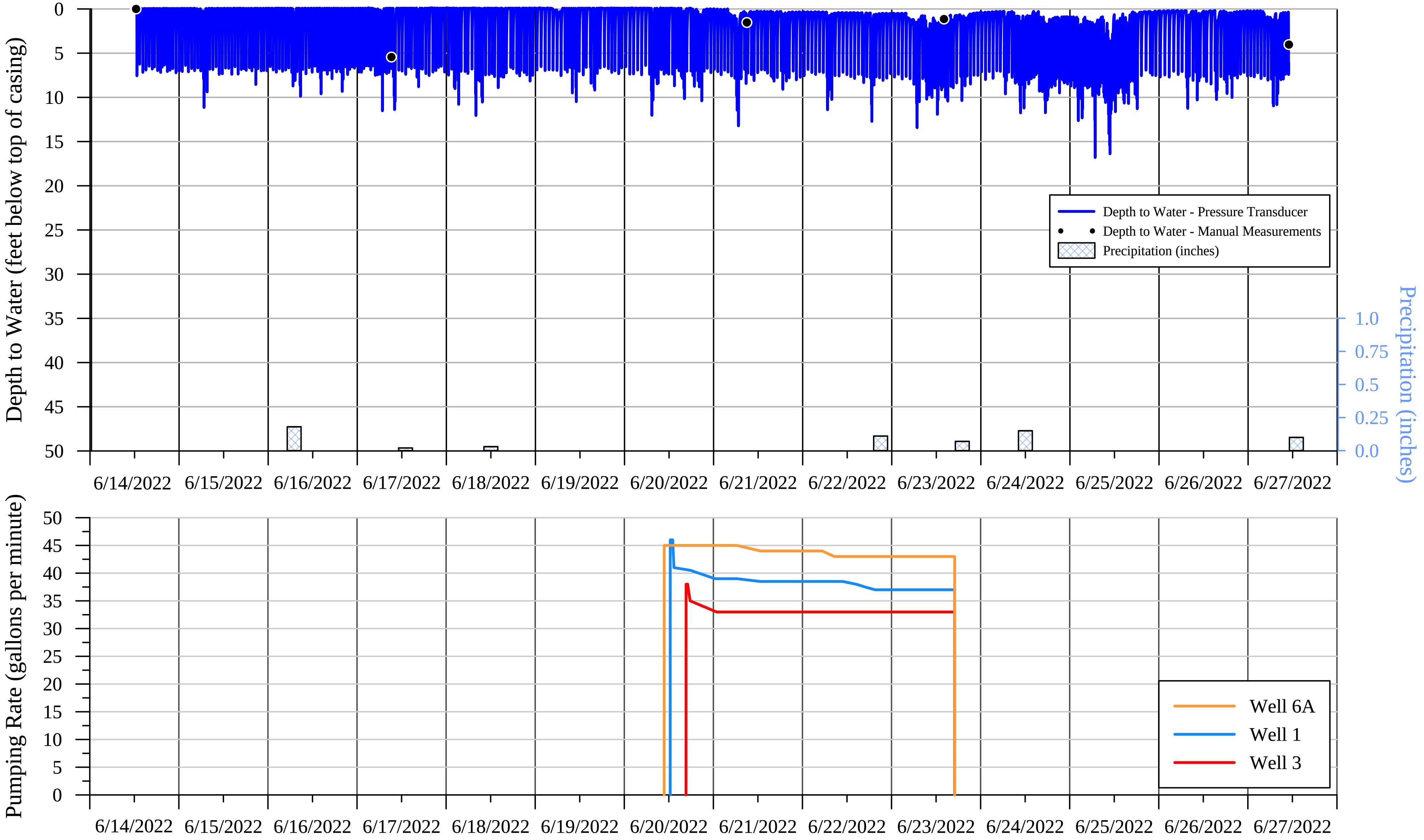

SUMMIT COUNTRY CLUB
568 BEDFORD ROAD
NORTH CASTLE, NEW YORK

Hydrograph of Water-Level Measurements Collected from Well Located at 11 Blair Road During the 72-Hour Pumping Test Conducted on Wells 1, 3 and 6A, June 2022

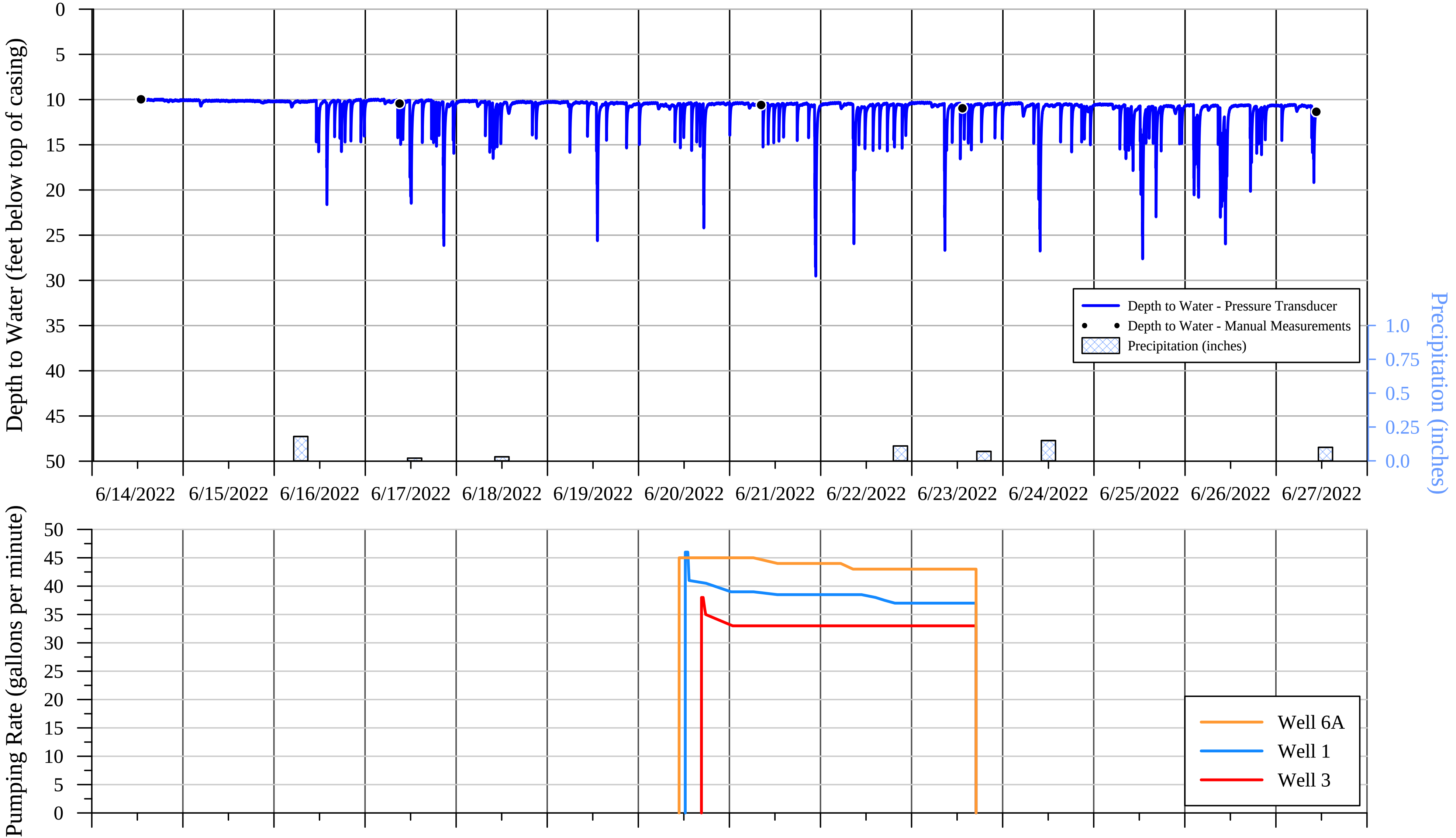

SUMMIT COUNTRY CLUB
568 BEDFORD ROAD
NORTH CASTLE, NEW YORK

Hydrograph of Water-Level Measurements Collected from Well Located at 14 Willow Pond Lane During the 72-Hour Pumping Test Conducted on Wells 1, 3 and 6A, June 2022

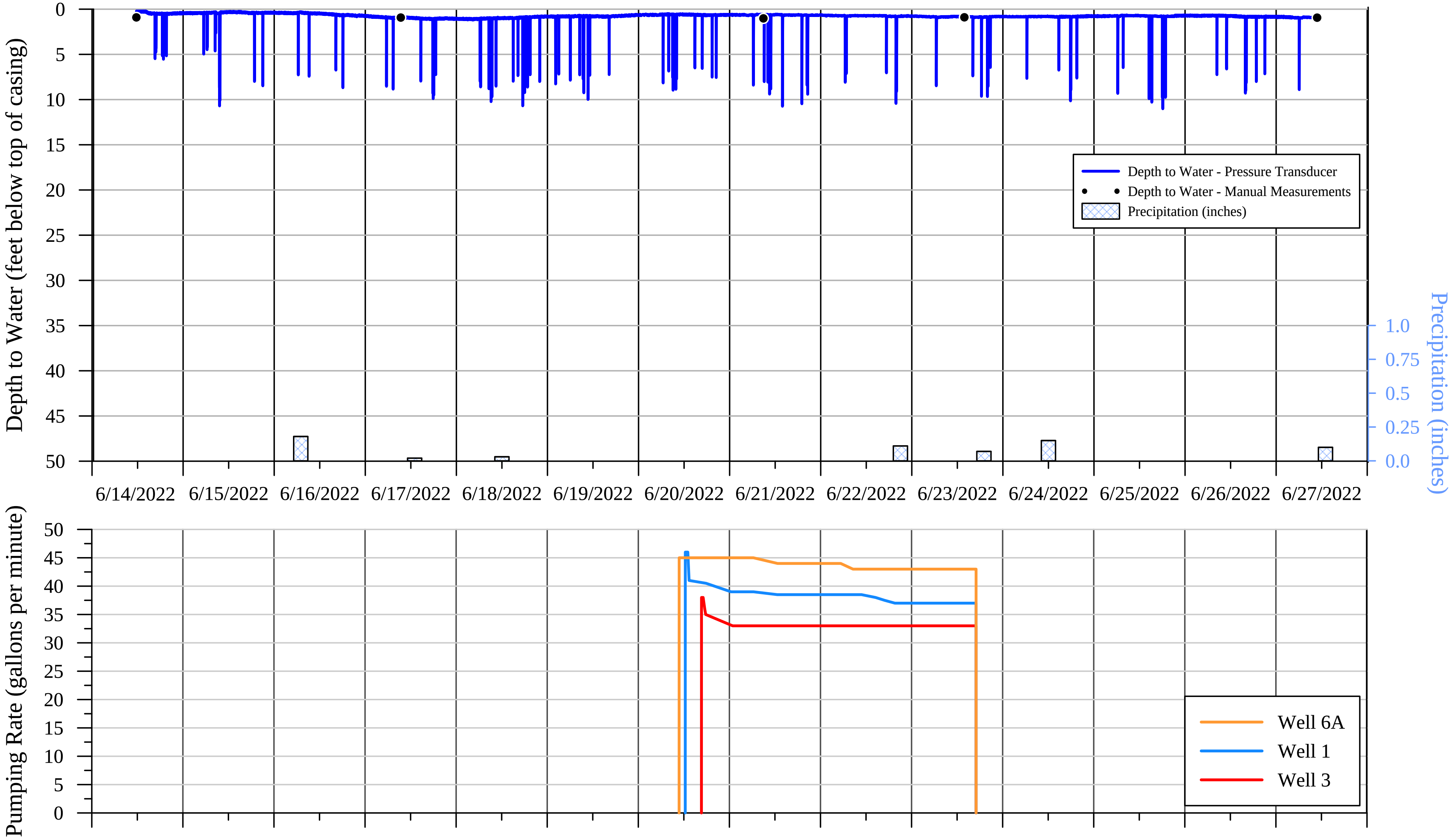

SUMMIT COUNTRY CLUB
568 BEDFORD ROAD
NORTH CASTLE, NEW YORK

Hydrograph of Water-Level Measurements Collected from Well Located at 30 Blair Road During the 72-Hour Pumping Test Conducted on Wells 1, 3 and 6A, June 2022

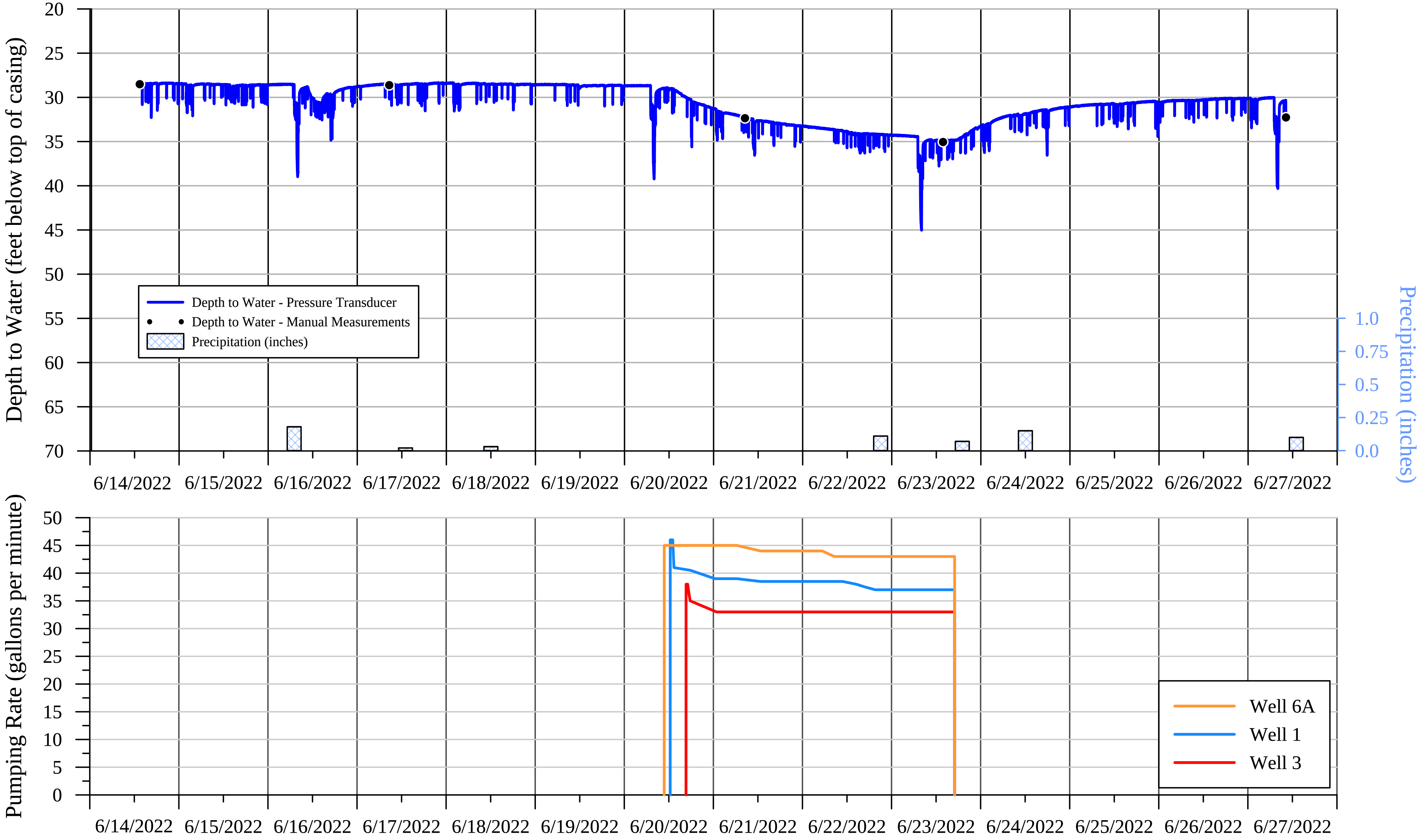

SUMMIT COUNTRY CLUB
568 BEDFORD ROAD
NORTH CASTLE, NEW YORK

Hydrograph of Water-Level Measurements Collected from Well Located at 34 Blair Road During the 72-Hour Pumping Test Conducted on Wells 1, 3 and 6A, June 2022

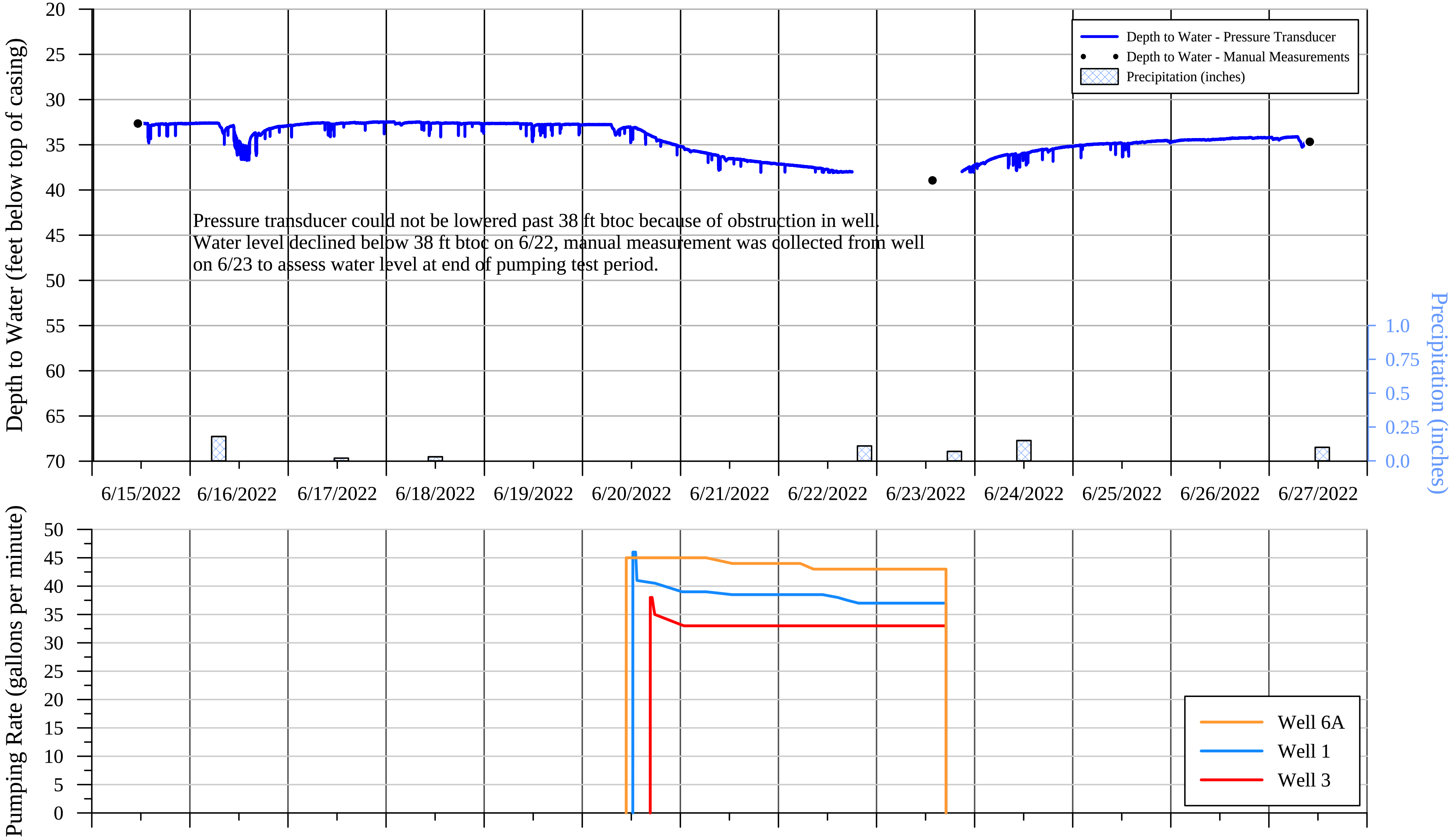

SUMMIT COUNTRY CLUB
568 BEDFORD ROAD
NORTH CASTLE, NEW YORK

Hydrograph of Water-Level Measurements Collected from Well Located at 70 Old Byram Lake Road During the 72-Hour Pumping Test Conducted on Wells 1, 3 and 6A, June 2022

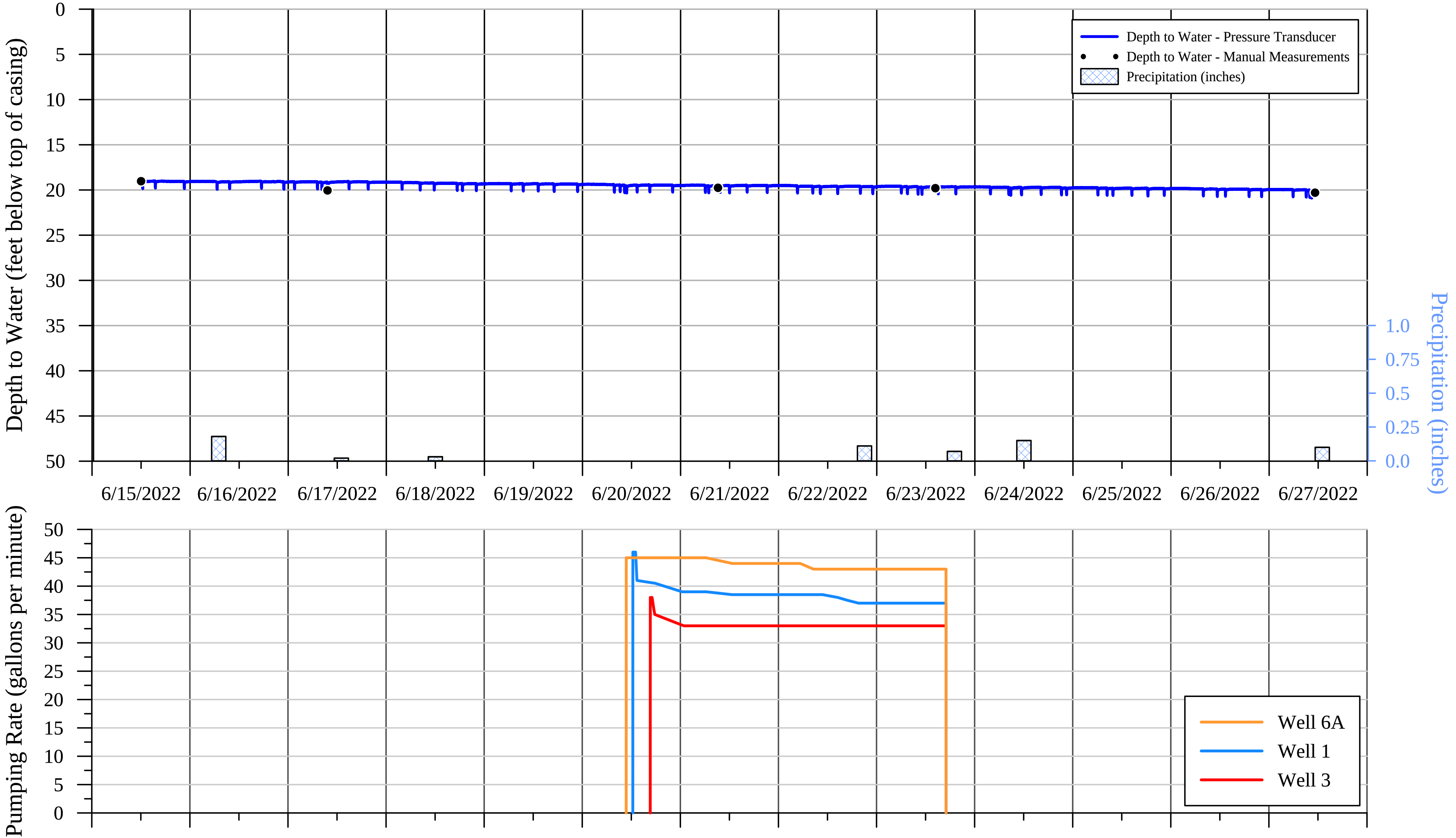

SUMMIT COUNTRY CLUB
568 BEDFORD ROAD
NORTH CASTLE, NEW YORK

Hydrograph of Water-Level Measurements Collected from Well Located at 198 Byram Lake Road During the 72-Hour Pumping Test Conducted on Wells 1, 3 and 6A, June 2022

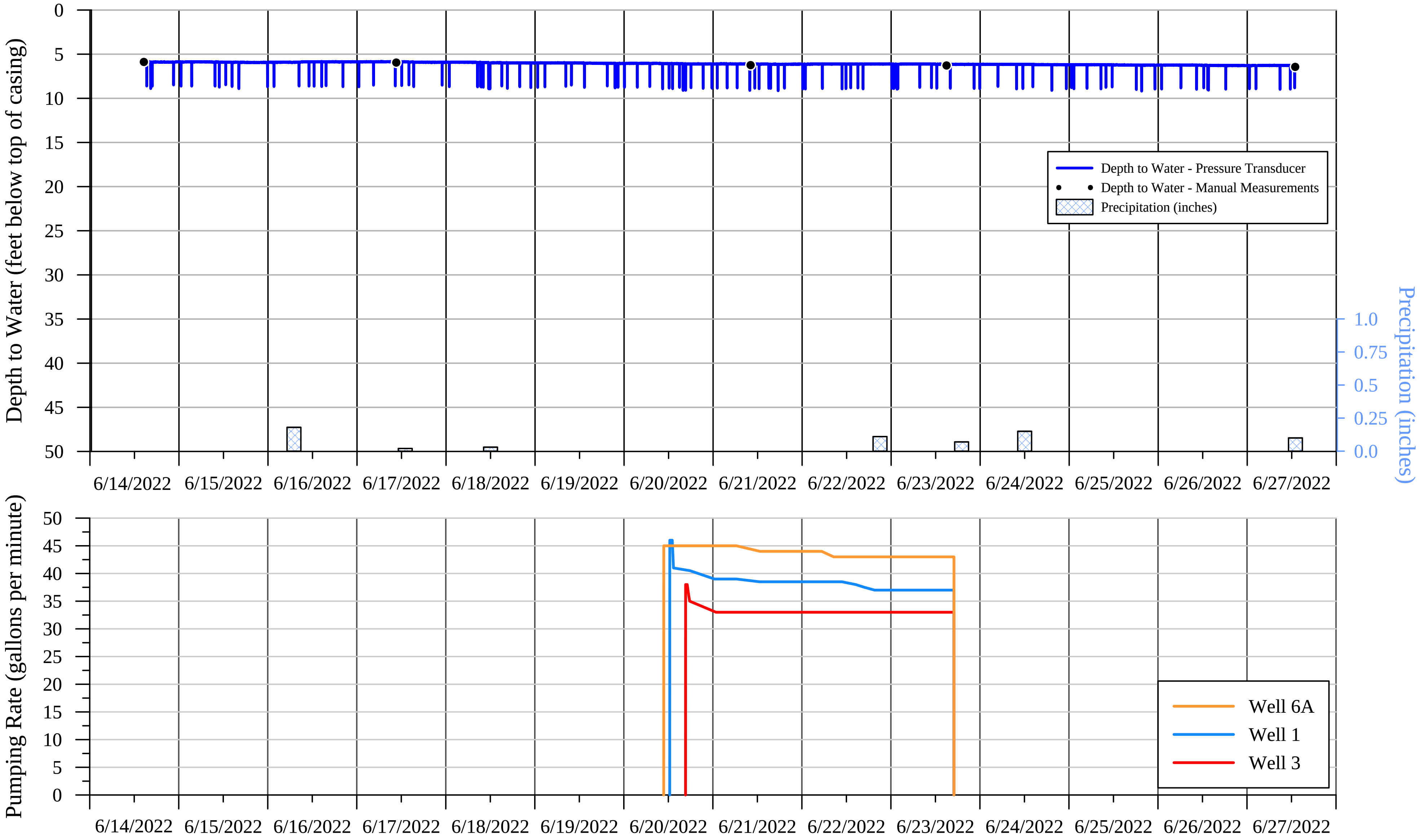

SUMMIT COUNTRY CLUB
568 BEDFORD ROAD
NORTH CASTLE, NEW YORK

Manual Water-Level Measurements Collected from Offsite Monitoring Wells During the 72-Hour Pumping Test Conducted on Wells 1, 3 and 6A, June 2022

Date/Time	Depth to Water (ft btoc)
4 Norman Place	
6/15/2022 13:41	49.94
6/15/2022 13:54	49.84
6/17/2022 10:16	48.89
6/21/2022 9:47	50.06
6/23/2022 15:11	50.63
6/27/2022 12:15	51.54
6 Byram Hill Road	
6/15/2022 12:24	80.22
6/15/2022 12:36	80.52
6/17/2022 9:50	80.53
6/21/2022 9:26	81.22
6/23/2022 14:33	81.57
6/27/2022 11:34	82.49
8 Colonial Court	
6/14/2022 10:51	17.27
6/14/2022 10:59	17.12
6/17/2022 8:18	17.39
6/21/2022 10:44	19.15
6/23/2022 13:05	17.33
6/27/2022 9:16	17.45
8 Embassy Court	
6/14/2022 9:51	6.86
6/14/2022 10:08	6.59
6/17/2022 8:05	7.77
6/21/2022 10:32	7.18
6/23/2022 12:54	7.20
6/27/2022 13:15	9.41
8 Evans Place	
6/14/2022 14:56	78.89
6/14/2022 15:02	77.89
6/17/2022 10:23	99.05
6/21/2022 9:54	112.04
6/23/2022 15:20	70.61
6/27/2022 12:34	73.58
10 Byram Hill Road	
6/15/2022 12:55	83.70
6/15/2022 13:06	83.51
6/17/2022 10:00	83.29
6/17/2022 10:02	83.55
6/21/2022 9:36	84.52
6/23/2022 14:45	84.93
6/27/2022 11:57	87.06
10 Willow Pond Lane	
6/14/2022 12:11	0.00
6/14/2022 12:25	0.00
6/17/2022 9:12	5.44
6/21/2022 8:58	1.53
6/23/2022 14:04	1.14
6/27/2022 11:00	4.03

SUMMIT COUNTRY CLUB
568 BEDFORD ROAD
NORTH CASTLE, NEW YORK

Manual Water-Level Measurements Collected from Offsite Monitoring Wells During the 72-Hour Pumping Test Conducted on Wells 1, 3 and 6A, June 2022

Date/Time	Depth to Water (ft btoc)
11 Blair Road	
6/14/2022 12:47	9.98
6/14/2022 12:54	9.97
6/17/2022 9:02	10.44
6/21/2022 8:18	10.60
6/23/2022 13:21	10.96
6/27/2022 10:35	11.35
14 Willow Pond Lane	
6/14/2022 11:29	0.93
6/14/2022 11:41	0.91
6/17/2022 9:19	0.93
6/17/2022 9:21	0.93
6/21/2022 8:54	1.02
6/23/2022 13:51	0.90
6/27/2022 10:48	0.94
30 Blair Road	
6/14/2022 13:17	28.51
6/14/2022 13:24	28.51
6/17/2022 8:37	28.62
6/21/2022 8:27	32.36
6/23/2022 13:49	35.05
6/27/2022 10:12	32.27
34 Blair Road	
6/15/2022 10:56	32.67
6/15/2022 11:13	32.65
6/23/2022 13:38	38.94
6/27/2022 9:57	34.67
70 Old Byram Lake Road	
6/15/2022 11:48	19.02
6/15/2022 12:00	19.03
6/17/2022 9:37	20.05
6/21/2022 9:09	19.76
6/23/2022 14:20	19.80
6/27/2022 11:14	20.30
198 Byram Lake Road	
6/14/2022 14:26	5.87
6/14/2022 14:32	5.88
6/17/2022 10:35	5.95
6/21/2022 10:07	6.24
6/23/2022 14:56	6.28
6/27/2022 12:56	6.44

ft btoc feet below top of casing

APPENDIX VI

SUMMIT COUNTRY CLUB
568 BEDFORD ROAD
NORTH CASTLE, NEW YORK

Hydrograph of Water-Level Measurements Collected from Nested Piezometer Pair PZ-1 During the 72-Hour Pumping Test Conducted on Wells 1, 3 and 6A, June 2022

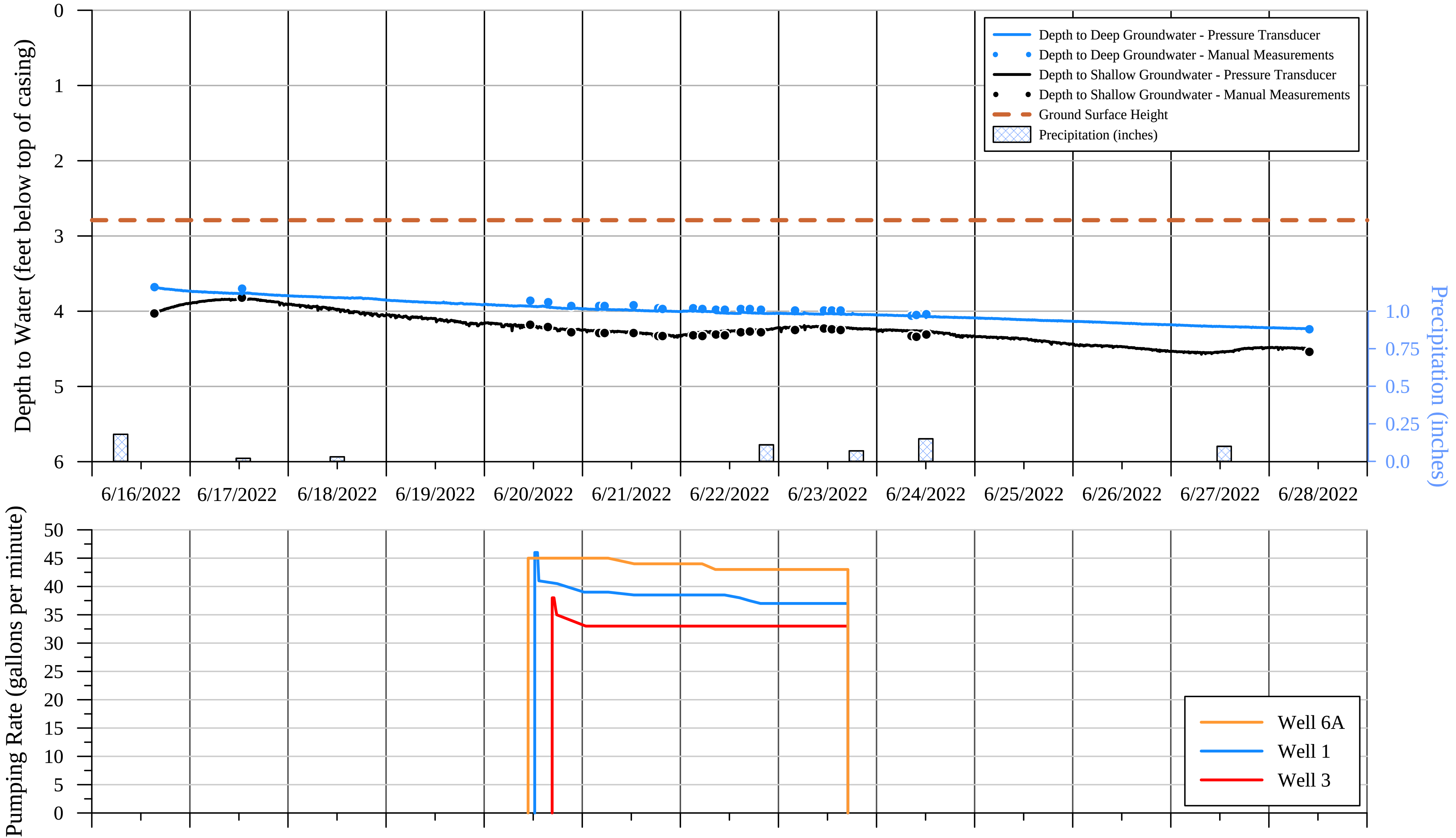

SUMMIT COUNTRY CLUB
568 BEDFORD ROAD
NORTH CASTLE, NEW YORK

Manual Water-Level Measurements Collected from Nested Piezometer Pair PZ-1 During the 72-Hour Pumping Test Conducted on Wells 1, 3 and 6A, June 2022

Date/Time	Depth to Groundwater, Shallow Screened Piezometer (ft btoc)	Depth to Groundwater, Deeper Screened Piezometer (ft btoc)[1/]	Vertical Gradient	Vertical Head Direction
6/16/2022 15:15	4.03	3.68	0.35	Upward
6/17/2022 12:40	3.82	3.70	0.12	Upward
6/20/2022 11:12	4.18	3.86	0.32	Upward
6/20/2022 15:32	4.21	3.88	0.33	Upward
6/20/2022 21:15	4.28	3.93	0.35	Upward
6/21/2022 4:05	4.29	3.93	0.36	Upward
6/21/2022 5:25	4.29	3.93	0.36	Upward
6/21/2022 12:30	4.29	3.92	0.37	Upward
6/21/2022 18:32	4.33	3.96	0.37	Upward
6/21/2022 19:35	4.33	3.97	0.36	Upward
6/22/2022 3:05	4.32	3.96	0.36	Upward
6/22/2022 5:20	4.33	3.97	0.36	Upward
6/22/2022 8:39	4.31	3.98	0.33	Upward
6/22/2022 10:50	4.32	3.98	0.34	Upward
6/22/2022 14:44	4.28	3.97	0.31	Upward
6/22/2022 16:57	4.27	3.97	0.30	Upward
6/22/2022 19:40	4.28	3.98	0.30	Upward
6/23/2022 4:00	4.25	3.99	0.26	Upward
6/23/2022 11:05	4.23	3.99	0.24	Upward
6/23/2022 13:00	4.24	3.99	0.25	Upward
6/23/2022 15:09	4.25	3.99	0.26	Upward
6/24/2022 8:30	4.33	4.06	0.27	Upward
6/24/2022 9:42	4.34	4.05	0.29	Upward
6/24/2022 12:08	4.31	4.04	0.27	Upward
6/28/2022 9:51	4.54	4.24	0.30	Upward

[1/] Measurements adjusted to match casing height of shallow piezometer.

ft btoc feet below top of casing

APPENDIX VII

WELL 1

AQUA ENVIRONMENTAL LAB
56 Church Hill Road • Newtown, CT 06470 • (203) 270-9973
A York Analytical Company
YORK
ANALYTICAL LABORATORIES INC

Report of Analysis

Name: WSP, USA
4 Research Dr.
Ste. 204
Shelton, CT 06484
Sample Date: 6/20/2022 2:03 PM
Receipt Date: 6/20/2022 2:03 PM
Report Date: 7/11/2022
Sample Site: Summit Well 1

Sample ID#: 288606
Sample Type: Drinking Water
Sampler: WSP

Parameter	Sample Result	Units	Limits	Method	RL	Analysis Date / Time
Biological						
Coliform Bacteria	absent	none	0	SM9223B-04	0	6/23/2022 16:30
e Coli Bacteria	absent	none	0	SM9223B-04	0	6/23/2022 16:30
Heterotrophic Plate Count	324	MPN	No Limit Set	SM9215E	0	6/23/2022 13:40
Inorganic Compounds						
Chlorine, residual	0	mg/L	4	SM4500CLG-2011	0	6/20/2022 14:03
Metals						
Arsenic	ND	mg/L	0.01	EPA 200.5	0.005	6/24/2022 13:11
Copper	ND	mg/L	1.3	EPA 200.5	0.005	6/24/2022 13:11
Iron	ND	mg/L	0.3	EPA 200.5	0.005	6/24/2022 13:11
Lead	ND	mg/L	0.015	EPA 200.5	0.001	6/24/2022 13:11
Manganese	0.008	mg/L	0.05	EPA 200.5	0.005	6/24/2022 13:11
Minerals						
Alkalinity	134	mg/L	No Limit Set	SM 2320B (-97)	5	7/5/2022 17:10
Chloride	21.2	mg/L	250	EPA 300.0	1	6/23/2022 20:14
Hardness	127	mg/L	No Limit Set	EPA 200.5	5	6/24/2022 13:11
Sodium	29.4	mg/L	100	EPA 200.5	1	6/24/2022 13:11
Sulfate	29.1	mg/L	250	EPA 300.0	2	6/23/2022 20:14
Miscellaneous/Other						
Langelier Saturation Index	-0.27 *	LSI	No Limit Set	CALCTN	0	7/6/2022 18:06
Nutrient						
Nitrate as N	ND	mg/L	10	EPA 300.0	0.5	6/23/2022 20:14
Nitrite as N	ND	mg/L	1	EPA 300.0	0.1	6/23/2022 20:14
Physical						
Color, apparent	<5	CU	15	SM 2120B-01	5	6/21/2022 13:30
Odor	0	TON	2	SM2150B-2011	0	6/23/2022 16:00

Based on the bacteriological examination, according to the Federal Safe Drinking Water Act (SDWA), this water was safe for drinking purposes at the time the sample was collected.
*Slightly corrosive but non-scale forming.

ND = Not Detected
* = Above Specified Limit

CT Lic PH-0787 NY Lic 11706

AquaEnvLab.com
YorkLab.com
203 270 9973

Report of Analysis

Name:	WSP, USA 4 Research Dr. Ste. 204 Shelton, CT 06484	**Sample ID#:**	288606
		Sample Type:	Drinking Water
		Sampler:	WSP
Sample Date:	6/20/2022 2:03 PM		
Receipt Date:	6/20/2022 2:03 PM		
Report Date:	7/11/2022		
Sample Site:	Summit Well 1		

Parameter	Sample Result	Units	Limits	Method	RL	Analysis Date / Time
Physical						
PH	8.1	pH	6.4 - 8.5	SM4500HB-2011	0	6/20/2022 14:03
Total Dissolved Solids (TDS)	254	mg/L	500	SM2540C-2011	None	6/29/2022 12:02
Turbidity	0.15	NTU	5	EPA 180.1	0.05	6/23/2022 16:00
Radiochemicals						
Water Radon(212825)	427 +/-21	pCi/L	No Limit Set	SM7500Rn-23	0	6/23/2022 16:50

Comments: Based on the bacteriological examination, according to the Federal Safe Drinking Water Act (SDWA), this water was safe for drinking purposes at the time the sample was collected.
*Slightly corrosive but non-scale forming.

ND = Not Detected
* = Above Specified Limit

Report Approved by: Thomas J. Braun
Lab Director

CT Lic PH-0787 NY Lic 11706

AquaEnvLab.com
YorkLab.com
203 270 9973

AQUA ENVIRONMENTAL LAB
56 Church Hill Road • Newtown, CT 06470 • (203) 270-9973
A York Analytical Company
YORK
ANALYTICAL LABORATORIES INC

Report of Analysis

Name: WSP, USA
4 Research Dr.
Ste. 204
Shelton, CT 06484
Sample Date: 6/20/2022 2:03 PM
Receipt Date: 6/20/2022 2:03 PM
Report Date: 7/27/2022
Sample Site: Summit Well 1

Sample ID#: 288607
Sample Type: Drinking Water
Sampler: WSP

Parameter	Sample Result	Units	Limits	Method	RL	Analysis Date / Time
Metals						
Antimony	ND	mg/L	No Limit Set	EPA 200.8	0.001	6/29/2022 16:20
Arsenic	ND	mg/L	0.01	EPA 200.5	0.005	6/24/2022 13:11
Barium	0.02	mg/L	2	EPA 200.5	0.001	6/24/2022 13:11
Beryllium	ND	mg/L	0.004	EPA 200.5	0.001	6/24/2022 13:11
Cadmium	ND	mg/L	0.005	EPA 200.5	0.001	6/24/2022 13:11
Chromium(T)	ND	mg/L	0.1	EPA 200.5	0.001	6/24/2022 13:11
Cyanide	<0.005	mg/L	0.2	EPA 335.4	0.005	6/24/2022 10:38
Mercury	<0.0002	mg/L	0.002	EPA 245.2	0.0002	6/29/2022 10:35
Nickel	ND	mg/L	0.1	EPA 200.5	0.001	6/24/2022 13:11
Selenium	ND	mg/L	0.05	EPA 200.5	0.005	6/24/2022 13:11
Silver	ND	mg/L	0.1	EPA 200.5	0.002	6/24/2022 13:11
Thallium	ND	mg/L	0.002	EPA 200.8	0.001	6/29/2022 16:20
Zinc	ND	mg/L	5	EPA 200.5	0.005	6/24/2022 13:11
Minerals						
Chloride	21.2	mg/L	250	EPA 300.0	1	6/23/2022 20:14
Fluoride	0.1	mg/L	4	EPA 300.0	0.1	6/23/2022 20:14
Sodium	29.4	mg/L	100	EPA 200.5	1	6/24/2022 13:11
Sulfate	29.1	mg/L	250	EPA 300.0	2	6/23/2022 20:14

ND = Not Detected
* = Above Specified Limit

Report Approved by: Thomas J. Braun
Lab Director

CT Lic PH-0787 NY Lic 11706

AquaEnvLab.com
YorkLab.com
203 270 9973

Analytical results relate to the samples as received at the laboratory. Report shall not be reproduced except in its entirety without written approval from the laboratory.

AQUA ENVIRONMENTAL LAB
56 Church Hill Road • Newtown, CT 06470 • (203) 270-9973
A York Analytical Company
YORK
ANALYTICAL LABORATORIES INC

Report of Analysis

Name: WSP, USA
4 Research Dr.
Ste. 204
Shelton, CT 06484
Sample Date: 6/20/2022 2:03 PM
Receipt Date: 6/20/2022 2:03 PM
Report Date: 7/25/2022
Sample Site: Summit Well 1

Sample ID#: 288610
Sample Type: Drinking Water
Sampler: WSP

Parameter	Sample Result	Units	Limits	Method	RL	Analysis Date / Time
Volatile Organic Compounds						
01) Benzene	ND	ug/L	5	EPA 524.2	0.5	6/24/2022 13:18
02) Bromobenzene	ND	ug/L	5	EPA 524.2	0.5	6/24/2022 13:18
03) Bromochloromethane	ND	ug/L	5	EPA 524.2	0.5	6/24/2022 13:18
04) Bromomethane	ND	ug/L	5	EPA 524.2	0.5	6/24/2022 13:18
05) n-Butylbenzene	ND	ug/L	5	EPA 524.2	0.5	6/24/2022 13:18
06) sec-Butylbenzene	ND	ug/L	5	EPA 524.2	0.5	6/24/2022 13:18
07) tert-Butylbenzene	ND	ug/L	5	EPA 524.2	0.5	6/24/2022 13:18
08) Carbon Tetrachloride	ND	ug/L	5	EPA 524.2	0.5	6/24/2022 13:18
09) Chlorobenzene	ND	ug/L	5	EPA 524.2	0.5	6/24/2022 13:18
10) Chloroethane	ND	ug/L	5	EPA 524.2	0.5	6/24/2022 13:18
11) Chloromethane	ND	ug/L	5	EPA 524.2	0.5	6/24/2022 13:18
12) 2-Chlorotoluene	ND	ug/L	5	EPA 524.2	0.5	6/24/2022 13:18
13) 4-Chlorotoluene	ND	ug/L	5	EPA 524.2	0.5	6/24/2022 13:18
14) Dibromomethane	ND	ug/L	5	EPA 524.2	0.5	6/24/2022 13:18
15) 1,2-Dichlorobenzene	ND	ug/L	5	EPA 524.2	0.5	6/24/2022 13:18
16) 1,3-Dichlorobenzene	ND	ug/L	5	EPA 524.2	0.5	6/24/2022 13:18
17) 1,4-Dichlorobenzene	ND	ug/L	5	EPA 524.2	0.5	6/24/2022 13:18
18) Dichlorodifluoromethane	ND	ug/L	5	EPA 524.2	0.5	6/24/2022 13:18
19) 1,1-Dichloroethane	ND	ug/L	5	EPA 524.2	0.5	6/24/2022 13:18
20) 1,2-Dichloroethane	ND	ug/L	5	EPA 524.2	0.5	6/24/2022 13:18
21) 1,1-Dichloroethene	ND	ug/L	5	EPA 524.2	0.5	6/24/2022 13:18
22) cis-1,2,-Dichloroethene	ND	ug/L	5	EPA 524.2	0.5	6/24/2022 13:18
23) trans-1,2-Dichloroethene	ND	ug/L	5	EPA 524.2	0.5	6/24/2022 13:18
24) 1,2-Dichloropropane	ND	ug/L	5	EPA 524.2	0.5	6/24/2022 13:18
25) 1,3-Dichloropropane	ND	ug/L	5	EPA 524.2	0.5	6/24/2022 13:18
26) 2,2-Dichloropropane	ND	ug/L	5	EPA 524.2	0.5	6/24/2022 13:18
27) 1,1-Dichloropropene	ND	ug/L	5	EPA 524.2	0.5	6/24/2022 13:18

ND = Not Detected
* = Above Specified Limit

CT Lic PH-0787 NY Lic 11706

AquaEnvLab.com
YorkLab.com
203 270 9973

Analytical results relate to the samples as received at the laboratory. Report shall not be reproduced except in its entirety without written approval from the laboratory.

Report of Analysis

Name: WSP, USA
4 Research Dr.
Ste. 204
Shelton, CT 06484
Sample Date: 6/20/2022 2:03 PM
Receipt Date: 6/20/2022 2:03 PM
Report Date: 7/25/2022
Sample Site: Summit Well 1

Sample ID#: 288610
Sample Type: Drinking Water
Sampler: WSP

Parameter	Sample Result	Units	Limits	Method	RL	Analysis Date / Time
Volatile Organic Compounds						
28] cis- 1,3-Dichloropropene	ND	ug/L	5	EPA 524.2	0.5	6/24/2022 13:18
29] trans-1,3-Dichloropropene	ND	ug/L	5	EPA 524.2	0.5	6/24/2022 13:18
30) Ethylbenzene	ND	ug/L	5	EPA 524.2	0.5	6/24/2022 13:18
31) Isopropylbenzene	ND	ug/L	5	EPA 524.2	0.5	6/24/2022 13:18
32) p-Isopropyltoluene	ND	ug/L	5	EPA 524.2	0.5	6/24/2022 13:18
33) Methylene chloride	ND	ug/L	5	EPA 524.2	0.5	6/24/2022 13:18
34) n-Propylbenzene	ND	ug/L	5	EPA 524.2	0.5	6/24/2022 13:18
35) Styrene	ND	ug/L	5	EPA 524.2	0.5	6/24/2022 13:18
36) 1,1,1,2-Tetrachloroethane	ND	ug/L	5	EPA 524.2	0.5	6/24/2022 13:18
37) 1,1,2,2-Tetrachloroethane	ND	ug/L	5	EPA 524.2	0.5	6/24/2022 13:18
38) Tetrachloroethene	ND	ug/L	5	EPA 524.2	0.5	6/24/2022 13:18
39) Toluene	ND	ug/L	5	EPA 524.2	0.5	6/24/2022 13:18
40) 1,2,3-Trichlorobenzene	ND	ug/L	5	EPA 524.2	0.5	6/24/2022 13:18
41) 1,2,4-Trichlorobenzene	ND	ug/L	5	EPA 524.2	0.5	6/24/2022 13:18
42) 1,1,1-Trichloroethane	ND	ug/L	5	EPA 524.2	0.5	6/24/2022 13:18
43) 1,1,2-Trichloroethane	ND	ug/L	5	EPA 524.2	0.5	6/24/2022 13:18
44) Trichloroethene	ND	ug/L	5	EPA 524.2	0.5	6/24/2022 13:18
45) Trichlorofluoromethane	ND	ug/L	5	EPA 524.2	0.5	6/24/2022 13:18
46) 1,2,3-Trichloropropane	ND	ug/L	5	EPA 524.2	0.5	6/24/2022 13:18
47} 1,2,4-Trimethylbenzene	ND	ug/L	5	EPA 524.2	0.5	6/24/2022 13:18
48) 1,3,5-Trimethylbenzene	ND	ug/L	5	EPA 524.2	0.5	6/24/2022 13:18
49) o-Xylene	ND	ug/L	5	EPA 524.2	0.5	6/24/2022 13:18
50) Hexachlorobutadiene	ND	ug/L	5	EPA 524.2	0.5	6/24/2022 13:18
51) m+p-Xylene	ND	ug/L	5	EPA 524.2	0.5	6/24/2022 13:18
52) Methyl-tertiary-butyl-ether	ND	ug/L	10	EPA 524.2	0.5	6/24/2022 13:18
53) Vinyl chloride	ND	ug/L	2	EPA 524.2	0.5	6/24/2022 13:18

ND = Not Detected
* = Above Specified Limit

Report Approved by:
Lab Director

CT Lic PH-0787 NY Lic 11706

AquaEnvLab.com
YorkLab.com
203 270 9973

Analytical results relate to the samples as received at the laboratory. Report shall not be reproduced except in its entirety without written approval from the laboratory.

AQUA ENVIRONMENTAL LAB
56 Church Hill Road • Newtown, CT 06470 • (203) 270-9973
A York Analytical Company
YORK
ANALYTICAL LABORATORIES INC

Report of Analysis

Name:	WSP, USA 4 Research Dr. Ste. 204 Shelton, CT 06484	**Sample ID#:**	288609
Sample Date:	6/20/2022 2:03 PM	**Sample Type:**	Drinking Water
Receipt Date:	6/20/2022 2:03 PM	**Sampler:**	WSP
Report Date:	7/27/2022		
Sample Site:	Summit Well 1		

Parameter	Sample Result	Units	Limits	Method	RL	Analysis Date / Time
Organic Compounds						
PCB	ND	mg/L	0.5	EPA 508.1	0.0002	7/25/2022 10:44
Synthetic Organic Chemicals P						
Butachlor	ND	mg/L	0	EPA 508.1	0.001	7/25/2022 10:44
Dioxin	ND	ug/L	0	EPA 1613-B	5	7/2/2022 10:44
Endothall	ND	mg/L	0	EPA 548.1	5	6/29/2022 10:44
Metribuzin	ND	mg/L	0	EPA 508.1	0.0005	7/25/2022 10:44
Propachlor	ND	mg/L	0	EPA 508.1	0.001	7/25/2022 10:44
Synthetic Organic Chemicals P						
Dalapon	ND	mg/L	200	EPA 552.2	0.002	6/29/2022 10:44
Synthetic Organic Compounds						
2,4,5-TP	ND	mg/L	50	EPA 555	0.0004	6/29/2022 10:44
2,4-D	ND	mg/L	70	EPA 555	0.0002	6/29/2022 10:44
3-Hydroxycarbofuran	ND	mg/L	No Limit Set	EPA 531.1	0.002	7/3/2022 10:44
Alachlor	ND	mg/L	2	EPA 508.1	0.0004	7/25/2022 10:44
Aldicarb	ND	mg/L	No Limit Set	EPA 531.1	0.001	7/3/2022 10:44
Aldicarb Sulfone	ND	mg/L	No Limit Set	EPA 531.1	0.0017	7/3/2022 10:44
Aldicarb Sulfoxide	ND	mg/L	No Limit Set	EPA 531.1	0.001	7/3/2022 10:44
Aldrin	ND	mg/L	0	EPA 508.1	0.0005	6/27/2022 10:44
Atrazine	ND	ug/L	3	EPA 508.1	0.0002	6/27/2022 10:44
Benzo (A) Pyrene	ND	mg/L	0.2	EPA 525.2	0	7/12/2022 10:44
Carbaryl	ND	mg/L	No Limit Set	EPA 531.1	0.004	7/3/2022 10:44
Carbofuran	ND	mg/L	40	EPA 531.1	0.0019	7/3/2022 10:44
Chlordane	ND	mg/L	2	EPA 508.1	0.0004	6/27/2022 10:44
Di (2-ethylhexyl) adipate	ND	mg/L	400	EPA 525.2	0.001	7/12/2022 10:44
Di (2-ethylhexyl) phthalates	ND	mg/L	6	EPA 525.2	0.001	7/12/2022 10:44
Dibromochloropropane(DBCP)	ND	mg/L	0.2	EPA 504.1	0	7/25/2022 10:44

ND = Not Detected
* = Above Specified Limit

Report of Analysis

Name: WSP, USA
4 Research Dr.
Ste. 204
Shelton, CT 06484
Sample Date: 6/20/2022 2:03 PM
Receipt Date: 6/20/2022 2:03 PM
Report Date: 7/27/2022
Sample Site: Summit Well 1

Sample ID#: 288609
Sample Type: Drinking Water
Sampler: WSP

Parameter	Sample Result	Units	Limits	Method	RL	Analysis Date / Time
Synthetic Organic Compounds						
Dicamba	ND	mg/L	No Limit Set	EPA 555	0.0008	6/29/2022 10:44
Dieldrin	ND	mg/L	No Limit Set	EPA 508.1	0	6/27/2022 10:44
Dinoseb	ND	mg/L	7	EPA 555	0.0004	6/29/2022 10:44
Diquat	ND	mg/L	0	EPA 549.2	0.0008	6/28/2022 10:44
Endrin	ND	mg/L	2	EPA 508.1	0	6/27/2022 10:44
Ethylene Dibromide(EDB)	ND	mg/L	0.05	EPA 504.1	0	7/25/2022 10:44
Glyphosphate	ND	mg/L	700	EPA 547	0.01	6/27/2022 10:44
Heptachlor	ND	mg/L	0.4	EPA 508.1	0.0001	6/27/2022 10:44
Heptachlor Epoxide	ND	mg/L	No Limit Set	EPA 508.1	0.0002	7/25/2022 10:44
Hexachlorobenzene	ND	mg/L	1	EPA 508.1	0.0002	7/25/2022 10:44
Hexachlorocyclopentadiene	ND	mg/L	50	EPA 508.1	0.0002	7/25/2022 10:44
Lindane	ND	mg/L	0.2	EPA 508.1	0.0002	7/25/2022 10:44
Methomyl	ND	mg/L	0	EPA 531.1	0.004	7/3/2022 10:44
Methoxychlor	ND	mg/L	40	EPA 508.1	0.001	7/25/2022 10:44
Metolachlor	ND	mg/L	No Limit Set	EPA 508.1	0.001	7/25/2022 10:44
Oxamyl (Vydate)	ND	mg/L	200	EPA 531.1	0.004	7/3/2022 10:44
Pentachlorophenol	ND	mg/L	1	EPA 555	0.0001	6/29/2022 10:44
Picloram	ND	mg/L	500	EPA 555	0.0002	6/29/2022 10:44
Simazine	ND	mg/L	4	EPA 508.1	0.0001	7/25/2022 10:44
Toxaphene	ND	mg/L	3	EPA 508.1	0.002	7/25/2022 10:44

ND = Not Detected
* = Above Specified Limit

Report Approved by: ______________________
Lab Director

CT Lic PH-0787 NY Lic 11706

AquaEnvLab.com
YorkLab.com
203 270 9973

Analytical results relate to the samples as received at the laboratory. Report shall not be reproduced except in its entirety without written approval from the laboratory.

AQUA ENVIRONMENTAL LAB
56 Church Hill Road • Newtown, CT 06470 • (203) 270-9973
A York Analytical Company
YORK
ANALYTICAL LABORATORIES INC

Report of Analysis

Name:	WSP, USA 4 Research Dr. Ste. 204 Shelton, CT 06484	**Sample ID#:**	288605
		Sample Type:	Drinking Water
		Sampler:	WSP
Sample Date:	6/20/2022 2:03 PM		
Receipt Date:	6/20/2022 2:03 PM		
Report Date:	7/1/2022		
Sample Site:	Summit Well 1		

Parameter	Sample Result	Units	Limits	Method	RL	Analysis Date / Time
Miscellaneous/Other						
Asbestos	ND	MFL	0	EPA 100.2	0.19	6/30/2022 08:18

ND = Not Detected
* = Above Specified Limit

Report Approved by: ______________________
Lab Director

CT Lic PH-0787 NY Lic 11706

AquaEnvLab.com
YorkLab.com
203 270 9973

AQUA ENVIRONMENTAL LAB
56 Church Hill Road • Newtown, CT 06470 • (203) 270-9973
A York Analytical Company
YORK
ANALYTICAL LABORATORIES INC

Report of Analysis

Name:	WSP, USA 4 Research Dr. Ste. 204 Shelton, CT 06484	**Sample ID#:**	288611
		Sample Type:	Drinking Water
		Sampler:	WSP
Sample Date:	6/20/2022 2:03 PM		
Receipt Date:	6/20/2022 2:03 PM		
Report Date:	7/26/2022		
Sample Site:	Summit Well 1		

Parameter	Sample Result	Units	Limits	Method	RL	Analysis Date / Time
Radiochemicals						
Gross Beta	3.48+/-0.995	pCi/L	No Limit Set	EPA 900.0	None	7/18/2022 08:35
Radium 226	0.531+/-0.417	pCi/L	5	EPA 903.0	1	7/21/2022 14:03
Radium 228	0.390+/-0.305	pCi/L	5	EPA 904.0	1	7/21/2022 11:57
Total Gross Alpha	2.44+/-1.68	pCi/L	No Limit Set	EPA 900.0	3	7/18/2022 08:35
Uranium	1.9	ug/L	30	EPA 200.8	1	6/29/2022 16:20

ND = Not Detected
* = Above Specified Limit

Report Approved by: Thomas J. Braun

Lab Director

CT Lic PH-0787 NY Lic 11706

AquaEnvLab.com
YorkLab.com
203 270 9973

Analytical results relate to the samples as received at the laboratory. Report shall not be reproduced except in its entirety without written approval from the laboratory.

AQUA ENVIRONMENTAL LAB
56 Church Hill Road • Newtown, CT 06470 • (203) 270-9973
A York Analytical Company
YORK
ANALYTICAL LABORATORIES INC

Report of Analysis

Name: WSP, USA
4 Research Dr.
Ste. 204
Shelton, CT 06484
Sample Date: 6/21/2022 8:39 AM
Receipt Date: 6/21/2022 8:39 AM
Report Date: 7/6/2022
Sample Site: Summit Well 1

Sample ID#: 288673
Sample Type: Drinking Water
Sampler: WSP

Parameter	Sample Result	Units	Limits	Method	RL	Analysis Date / Time
Organic Compounds						
1,4-Dioxane	ND	ug/L	1	EPA 522	0.2	6/24/2022 07:43
PerFluoroButaneSulfonic Acid	ND	ng/L	No Limit Set	EPA 537	1.34	7/1/2022 11:13
PerFluoroHeptanoic Acid	ND	ng/L	No Limit Set	EPA 537	1.34	7/1/2022 11:13
PerFluoroHexaneSulfonic Acid	2.22	ng/L	49	EPA 537	1.34	7/1/2022 11:13
PerFluoroHexanoic Acid	4.48	ng/L	No Limit Set	EPA 537	1.34	7/1/2022 11:13
PerFluoroNonanoic Acid	ND	ng/L	12	EPA 537	1.34	7/1/2022 11:13
PerFluoroOctaneSulfonic Acid	4.00	ng/L	10	EPA 537	1.34	7/1/2022 11:13
PerFluoroOctanoic Acid	4.70	ng/L	16	EPA 537	1.34	7/1/2022 11:13

ND = Not Detected
* = Above Specified Limit

Report Approved by:
Lab Director

CT Lic PH-0787   NY Lic 11706

AquaEnvLab.com
YorkLab.com
203 270 9973

Technical Report
Perfluoroalkyl Substances (PFAS)

prepared for:

Aqua Environmental Lab
56 Church Hill Road
Newtown CT, 06470
Attention: T. Braun

Report Date: 07/05/2022
Client Project ID: 288625/288617/288673
York Project (SDG) No.: 22F1242

CT Cert. No. PH-0723 New Jersey Cert. No. CT005 and NY037 New York Cert. Nos. 10854 and 12058 PA Cert. No. 68-04440

Report Date: 07/05/2022
Client Project ID: 288625/288617/288673
York Project (SDG) No.: 22F1242

Aqua Environmental Lab
56 Church Hill Road
Newtown CT, 06470
Attention: T. Braun

Purpose and Results

This report contains the analytical data for the sample(s) identified on the attached chain-of-custody received in our laboratory on June 23, 2022 and listed below. The project was identified as your project: **288625/288617/288673**.

The analyses were conducted utilizing appropriate EPA methods as detailed in the data summary tables.

All samples were received in proper condition meeting the customary acceptance requirements for environmental samples except those indicated under the Sample and Analysis Qualifiers section of this report.

All analyses met the method and laboratory standard operating procedure requirements except as indicated by any data flags, the meaning of which are explained in the Sample and Data Qualifiers Relating to This Work Order section of this report and case narrative if applicable.

Please contact Client Services at 203.325.1371 with any questions regarding this report or e-mail clientservices@yorklab.com.

York Sample ID	Client Sample ID	Matrix	Date Collected	Date Received
22F1242-01	288625	Drinking Water	06/23/2022	06/23/2022
22F1242-02	288617	Drinking Water	06/23/2022	06/23/2022
22F1242-03	288673	Drinking Water	06/23/2022	06/23/2022
22F1242-04	288625-PFAS-Field Blank	Drinking Water	06/23/2022	06/23/2022
22F1242-05	288617-PFAS-Field Blank	Drinking Water	06/23/2022	06/23/2022
22F1242-06	288673-PFAS-Field Blank	Drinking Water	06/23/2022	06/23/2022

General Notes for York Project (SDG) No.: 22F1242

1. The RLs and MDLs (Reporting Limit and Method Detection Limit respectively) reported are adjusted for any dilution necessary due to the levels of target and/or non-target analytes and matrix interference. The RL(REPORTING LIMIT) is based upon the lowest standard utilized for the calibration where applicable.
2. Samples are retained for a period of thirty days after submittal of report, unless other arrangements are made.
3. York's liability for the above data is limited to the dollar value paid to York for the referenced project.
4. This report shall not be reproduced without the written approval of York Analytical Laboratories, Inc.
5. All analyses conducted met method or Laboratory SOP requirements. See the Sample and Data Qualifiers Section for further information.
6. It is noted that no analyses reported herein were subcontracted to another laboratory, unless noted in the report.
7. This report reflects results that relate only to the samples submitted on the attached chain-of-custody form(s) received by York.
8. Analyses conducted at York Analytical Laboratories, Inc. Stratford, CT are indicated by NY Cert. No. 10854; those conducted at York Analytical Laboratories, Inc., Richmond Hill, NY are indicated by NY Cert. No. 12058.

Approved By: **Date:** 07/05/2022

Cassie L. Mosher
Laboratory Manager

Sample Information

Client Sample ID: **288625**

York Sample ID: **22F1242-01**

York Project (SDG) No.	Client Project ID	Matrix	Collection Date/Time	Date Received
22F1242	288625/288617/288673	Drinking Water	June 23, 2022 8:00 am	06/23/2022

1,4-Dioxane by GC/MS/SIM EPA 522

Log-in Notes:

Sample Notes:

Sample Prepared by Method: EPA 522

CAS No.	Parameter	Result	Flag	Maximum Contaminant Level MCL, ng/L	Units	Reported to LOQ	Reference Method	Date/Time Analyzed	Analyst
123-91-1	1,4-Dioxane	ND		1	ug/L Certifications:	0.200	EPA 522 NELAC-NY10854	06/24/2022 07:43 06/27/2022 15:05	KH
1693-74-9	*** Tetrahydrofuran-d8**	**0.500**		**0**	ug/mL Certifications:		EPA 522	06/24/2022 07:43 06/27/2022 15:05	KH

	Surrogate Recoveries	Result	Acceptance Range
17647-74-4	*Surrogate: 1,4-Dioxane-d8*	*80.0 %*	*70-130*

PFAS, EPA 537.1 List

Well 3

Log-in Notes:

Sample Notes:

Sample Prepared by Method: EPA 537.1 SPE DVB

CAS No.	Parameter	Result	Flag	Maximum Contaminant Level MCL, ng/L	Units	Reported to LOQ	Reference Method	Date/Time Analyzed	Analyst
375-73-5	* Perfluorobutanesulfonic acid (PFBS)	ND		0	ng/L Certifications:	1.35	EPA 537.1	07/01/2022 11:13 07/05/2022 13:50	WEL
307-24-4	*** Perfluorohexanoic acid (PFHxA)**	**1.49**		**0**	ng/L Certifications:	1.35	EPA 537.1	07/01/2022 11:13 07/05/2022 13:50	WEL
375-85-9	* Perfluoroheptanoic acid (PFHpA)	ND		0	ng/L Certifications:	1.35	EPA 537.1	07/01/2022 11:13 07/05/2022 13:50	WEL
355-46-4	*** Perfluorohexanesulfonic acid (PFHxS)**	**1.46**		**0**	ng/L Certifications:	1.35	EPA 537.1	07/01/2022 11:13 07/05/2022 13:50	WEL
335-67-1	**Perfluorooctanoic acid (PFOA)**	**3.35**		**10**	ng/L Certifications:	1.35	EPA 537.1 NELAC-NY12058	07/01/2022 11:13 07/05/2022 13:50	WEL
1763-23-1	**Perfluorooctanesulfonic acid (PFOS)**	**2.05**		**10**	ng/L Certifications:	1.35	EPA 537.1 NELAC-NY12058	07/01/2022 11:13 07/05/2022 13:50	WEL
375-95-1	* Perfluorononanoic acid (PFNA)	ND		0	ng/L Certifications:	1.35	EPA 537.1	07/01/2022 11:13 07/05/2022 13:50	WEL
335-76-2	* Perfluorodecanoic acid (PFDA)	ND		0	ng/L Certifications:	1.35	EPA 537.1	07/01/2022 11:13 07/05/2022 13:50	WEL
2058-94-8	* Perfluoroundecanoic acid (PFUnA)	ND		0	ng/L Certifications:	1.35	EPA 537.1	07/01/2022 11:13 07/05/2022 13:50	WEL
307-55-1	* Perfluorododecanoic acid (PFDoA)	ND		0	ng/L Certifications:	1.35	EPA 537.1	07/01/2022 11:13 07/05/2022 13:50	WEL
72629-94-8	* Perfluorotridecanoic acid (PFTrDA)	ND		0	ng/L Certifications:	1.35	EPA 537.1	07/01/2022 11:13 07/05/2022 13:50	WEL
376-06-7	* Perfluorotetradecanoic acid (PFTA)	ND		0	ng/L Certifications:	1.35	EPA 537.1	07/01/2022 11:13 07/05/2022 13:50	WEL
2355-31-9	* N-MeFOSAA	ND		0	ng/L Certifications:	1.35	EPA 537.1	07/01/2022 11:13 07/05/2022 13:50	WEL
2991-50-6	* N-EtFOSAA	ND		0	ng/L Certifications:	1.35	EPA 537.1	07/01/2022 11:13 07/05/2022 13:50	WEL

Sample Information

Client Sample ID: 288625 **York Sample ID:** 22F1242-01

York Project (SDG) No.	Client Project ID	Matrix	Collection Date/Time	Date Received
22F1242	288625/288617/288673	Drinking Water	June 23, 2022 8:00 am	06/23/2022

PFAS, EPA 537.1 List

Log-in Notes: **Sample Notes:**

Sample Prepared by Method: EPA 537.1 SPE DVB

CAS No.	Parameter	Result	Flag	Maximum Contaminant Level MCL, ng/L	Units	Reported to LOQ	Reference Method	Date/Time Analyzed	Analyst
756426-58-1	* 9CL-PF3ONS	ND		0	ng/L Certifications:	1.35	EPA 537.1	07/01/2022 11:13 07/05/2022 13:50	WEL
763051-92-9	* 11CL-PF3OUdS	ND		0	ng/L Certifications:	1.35	EPA 537.1	07/01/2022 11:13 07/05/2022 13:50	WEL
13252-13-6	* HFPO-DA (Gen-X)	ND		0	ng/L Certifications:	1.35	EPA 537.1	07/01/2022 11:13 07/05/2022 13:50	WEL
919005-14-4	* ADONA	ND		0	ng/L Certifications:	1.35	EPA 537.1	07/01/2022 11:13 07/05/2022 13:50	WEL

Surrogate Recoveries	Result	Acceptance Range
Surrogate: d5-N-EtFOSAA	*107 %*	*70-130*
Surrogate: 13C-PFDA	*90.5 %*	*70-130*
Surrogate: 13C-PFHxA	*104 %*	*70-130*
Surrogate: M3HFPO-DA	*96.7 %*	*70-130*

Sample Information

Client Sample ID: 288617 **York Sample ID:** 22F1242-02

York Project (SDG) No.	Client Project ID	Matrix	Collection Date/Time	Date Received
22F1242	288625/288617/288673	Drinking Water	June 23, 2022 9:00 am	06/23/2022

1,4-Dioxane by GC/MS/SIM EPA 522

Log-in Notes: **Sample Notes:**

Sample Prepared by Method: EPA 522

CAS No.	Parameter	Result	Flag	Maximum Contaminant Level MCL, ng/L	Units	Reported to LOQ	Reference Method	Date/Time Analyzed	Analyst
123-91-1	1,4-Dioxane	ND		1	ug/L Certifications:	0.200 NELAC-NY10854	EPA 522	06/24/2022 07:43 06/27/2022 15:25	KH
1693-74-9	*** Tetrahydrofuran-d8**	**0.500**		**0**	ug/mL Certifications:		EPA 522	06/24/2022 07:43 06/27/2022 15:25	KH

	Surrogate Recoveries	Result	Acceptance Range
17647-74-4	*Surrogate: 1,4-Dioxane-d8*	*80.0 %*	*70-130*

PFAS, EPA 537.1 List

Well 6A

Log-in Notes: **Sample Notes:**

Sample Prepared by Method: EPA 537.1 SPE DVB

CAS No.	Parameter	Result	Flag	Maximum Contaminant Level MCL, ng/L	Units	Reported to LOQ	Reference Method	Date/Time Analyzed	Analyst
375-73-5	* Perfluorobutanesulfonic acid (PFBS)	ND		0	ng/L Certifications:	1.43	EPA 537.1	07/01/2022 11:13 07/05/2022 14:03	WEL

YORK
ANALYTICAL LABORATORIES INC

Sample Information

Client Sample ID: **288617** **York Sample ID:** **22F1242-02**

York Project (SDG) No.	Client Project ID	Matrix	Collection Date/Time	Date Received
22F1242	288625/288617/288673	Drinking Water	June 23, 2022 9:00 am	06/23/2022

PFAS, EPA 537.1 List

Log-in Notes:

Sample Notes:

Sample Prepared by Method: EPA 537.1 SPE DVB

CAS No.	Parameter	Result	Flag	Maximum Contaminant Level MCL, ng/L	Units	Reported to LOQ	Reference Method	Date/Time Analyzed	Analyst
307-24-4	*** Perfluorohexanoic acid (PFHxA)**	**1.78**		**0**	ng/L Certifications:	1.43	EPA 537.1	07/01/2022 11:13 07/05/2022 14:03	WEL
375-85-9	* Perfluoroheptanoic acid (PFHpA)	ND		0	ng/L Certifications:	1.43	EPA 537.1	07/01/2022 11:13 07/05/2022 14:03	WEL
355-46-4	*** Perfluorohexanesulfonic acid (PFHxS)**	**1.54**		**0**	ng/L Certifications:	1.43	EPA 537.1	07/01/2022 11:13 07/05/2022 14:03	WEL
335-67-1	**Perfluorooctanoic acid (PFOA)**	**3.88**		**10**	ng/L Certifications:	1.43 NELAC-NY12058	EPA 537.1	07/01/2022 11:13 07/05/2022 14:03	WEL
1763-23-1	**Perfluorooctanesulfonic acid (PFOS)**	**2.29**		**10**	ng/L Certifications:	1.43 NELAC-NY12058	EPA 537.1	07/01/2022 11:13 07/05/2022 14:03	WEL
375-95-1	* Perfluorononanoic acid (PFNA)	ND		0	ng/L Certifications:	1.43	EPA 537.1	07/01/2022 11:13 07/05/2022 14:03	WEL
335-76-2	* Perfluorodecanoic acid (PFDA)	ND		0	ng/L Certifications:	1.43	EPA 537.1	07/01/2022 11:13 07/05/2022 14:03	WEL
2058-94-8	* Perfluoroundecanoic acid (PFUnA)	ND		0	ng/L Certifications:	1.43	EPA 537.1	07/01/2022 11:13 07/05/2022 14:03	WEL
307-55-1	* Perfluorododecanoic acid (PFDoA)	ND		0	ng/L Certifications:	1.43	EPA 537.1	07/01/2022 11:13 07/05/2022 14:03	WEL
72629-94-8	* Perfluorotridecanoic acid (PFTrDA)	ND		0	ng/L Certifications:	1.43	EPA 537.1	07/01/2022 11:13 07/05/2022 14:03	WEL
376-06-7	* Perfluorotetradecanoic acid (PFTA)	ND		0	ng/L Certifications:	1.43	EPA 537.1	07/01/2022 11:13 07/05/2022 14:03	WEL
2355-31-9	* N-MeFOSAA	ND		0	ng/L Certifications:	1.43	EPA 537.1	07/01/2022 11:13 07/05/2022 14:03	WEL
2991-50-6	* N-EtFOSAA	ND		0	ng/L Certifications:	1.43	EPA 537.1	07/01/2022 11:13 07/05/2022 14:03	WEL
756426-58-1	* 9CL-PF3ONS	ND		0	ng/L Certifications:	1.43	EPA 537.1	07/01/2022 11:13 07/05/2022 14:03	WEL
763051-92-9	* 11CL-PF3OUdS	ND		0	ng/L Certifications:	1.43	EPA 537.1	07/01/2022 11:13 07/05/2022 14:03	WEL
13252-13-6	* HFPO-DA (Gen-X)	ND		0	ng/L Certifications:	1.43	EPA 537.1	07/01/2022 11:13 07/05/2022 14:03	WEL
919005-14-4	* ADONA	ND		0	ng/L Certifications:	1.43	EPA 537.1	07/01/2022 11:13 07/05/2022 14:03	WEL

Surrogate Recoveries	Result	Acceptance Range
Surrogate: d5-N-EtFOSAA	*102 %*	*70-130*
Surrogate: 13C-PFDA	*96.1 %*	*70-130*
Surrogate: 13C-PFHxA	*109 %*	*70-130*
Surrogate: M3HFPO-DA	*101 %*	*70-130*

Sample Information

Client Sample ID: **288673**　　**York Sample ID:** **22F1242-03**

York Project (SDG) No.	Client Project ID	Matrix	Collection Date/Time	Date Received
22F1242	288625/288617/288673	Drinking Water	June 23, 2022 9:20 am	06/23/2022

1,4-Dioxane by GC/MS/SIM EPA 522

Log-in Notes:

Sample Notes:

Sample Prepared by Method: EPA 522

CAS No.	Parameter	Result	Flag	Maximum Contaminant Level MCL, ng/L	Units	Reported to LOQ	Reference Method	Date/Time Analyzed	Analyst
123-91-1	1,4-Dioxane	ND		1	ug/L Certifications:	0.200 NELAC-NY10854	EPA 522	06/24/2022 07:43 06/27/2022 15:44	KH
1693-74-9	*** Tetrahydrofuran-d8**	**0.500**		**0**	ug/mL Certifications:		EPA 522	06/24/2022 07:43 06/27/2022 15:44	KH

	Surrogate Recoveries	Result	Acceptance Range
17647-74-4	*Surrogate: 1,4-Dioxane-d8*	*80.0 %*	*70-130*

PFAS, EPA 537.1 List

Well 1

Log-in Notes:

Sample Notes:

Sample Prepared by Method: EPA 537.1 SPE DVB

CAS No.	Parameter	Result	Flag	Maximum Contaminant Level MCL, ng/L	Units	Reported to LOQ	Reference Method	Date/Time Analyzed	Analyst
375-73-5	* Perfluorobutanesulfonic acid (PFBS)	ND		0	ng/L Certifications:	1.11	EPA 537.1	07/01/2022 11:13 07/05/2022 14:15	WEL
307-24-4	*** Perfluorohexanoic acid (PFHxA)**	**4.48**		**0**	ng/L Certifications:	1.11	EPA 537.1	07/01/2022 11:13 07/05/2022 14:15	WEL
375-85-9	* Perfluoroheptanoic acid (PFHpA)	ND		0	ng/L Certifications:	1.11	EPA 537.1	07/01/2022 11:13 07/05/2022 14:15	WEL
355-46-4	*** Perfluorohexanesulfonic acid (PFHxS)**	**2.22**		**0**	ng/L Certifications:	1.11	EPA 537.1	07/01/2022 11:13 07/05/2022 14:15	WEL
335-67-1	**Perfluorooctanoic acid (PFOA)**	**4.70**		**10**	ng/L Certifications:	1.11 NELAC-NY12058	EPA 537.1	07/01/2022 11:13 07/05/2022 14:15	WEL
1763-23-1	**Perfluorooctanesulfonic acid (PFOS)**	**4.00**		**10**	ng/L Certifications:	1.11 NELAC-NY12058	EPA 537.1	07/01/2022 11:13 07/05/2022 14:15	WEL
375-95-1	* Perfluorononanoic acid (PFNA)	ND		0	ng/L Certifications:	1.11	EPA 537.1	07/01/2022 11:13 07/05/2022 14:15	WEL
335-76-2	* Perfluorodecanoic acid (PFDA)	ND		0	ng/L Certifications:	1.11	EPA 537.1	07/01/2022 11:13 07/05/2022 14:15	WEL
2058-94-8	* Perfluoroundecanoic acid (PFUnA)	ND		0	ng/L Certifications:	1.11	EPA 537.1	07/01/2022 11:13 07/05/2022 14:15	WEL
307-55-1	* Perfluorododecanoic acid (PFDoA)	ND		0	ng/L Certifications:	1.11	EPA 537.1	07/01/2022 11:13 07/05/2022 14:15	WEL
72629-94-8	* Perfluorotridecanoic acid (PFTrDA)	ND		0	ng/L Certifications:	1.11	EPA 537.1	07/01/2022 11:13 07/05/2022 14:15	WEL
376-06-7	* Perfluorotetradecanoic acid (PFTA)	ND		0	ng/L Certifications:	1.11	EPA 537.1	07/01/2022 11:13 07/05/2022 14:15	WEL
2355-31-9	* N-MeFOSAA	ND		0	ng/L Certifications:	1.11	EPA 537.1	07/01/2022 11:13 07/05/2022 14:15	WEL
2991-50-6	* N-EtFOSAA	ND		0	ng/L Certifications:	1.11	EPA 537.1	07/01/2022 11:13 07/05/2022 14:15	WEL
756426-58-1	* 9CL-PF3ONS	ND		0	ng/L Certifications:	1.11	EPA 537.1	07/01/2022 11:13 07/05/2022 14:15	WEL

Sample Information

Client Sample ID: **288673** **York Sample ID:** **22F1242-03**

York Project (SDG) No.	Client Project ID	Matrix	Collection Date/Time	Date Received
22F1242	288625/288617/288673	Drinking Water	June 23, 2022 9:20 am	06/23/2022

PFAS, EPA 537.1 List **Log-in Notes:** **Sample Notes:**

Sample Prepared by Method: EPA 537.1 SPE DVB

CAS No.	Parameter	Result	Flag	Maximum Contaminant Level MCL, ng/L	Units	Reported to LOQ	Reference Method	Date/Time Analyzed	Analyst
763051-92-9	* 11CL-PF3OUdS	ND		0	ng/L Certifications:	1.11	EPA 537.1	07/01/2022 11:13 07/05/2022 14:15	WEL
13252-13-6	* HFPO-DA (Gen-X)	ND		0	ng/L Certifications:	1.11	EPA 537.1	07/01/2022 11:13 07/05/2022 14:15	WEL
919005-14-4	* ADONA	ND		0	ng/L Certifications:	1.11	EPA 537.1	07/01/2022 11:13 07/05/2022 14:15	WEL

Surrogate Recoveries	Result	Acceptance Range
Surrogate: d5-N-EtFOSAA	*96.0 %*	*70-130*
Surrogate: 13C-PFDA	*84.4 %*	*70-130*
Surrogate: 13C-PFHxA	*97.8 %*	*70-130*
Surrogate: M3HFPO-DA	*92.7 %*	*70-130*

Sample Information

Client Sample ID: **288625-PFAS-Field Blank** **York Sample ID:** **22F1242-04**

York Project (SDG) No.	Client Project ID	Matrix	Collection Date/Time	Date Received
22F1242	288625/288617/288673	Drinking Water	June 23, 2022 8:00 am	06/23/2022

PFAS, EPA 537.1 List **Log-in Notes:** **Sample Notes:**

Sample Prepared by Method: EPA 537.1 SPE DVB

CAS No.	Parameter	Result	Flag	Maximum Contaminant Level MCL, ng/L	Units	Reported to LOQ	Reference Method	Date/Time Analyzed	Analyst
375-73-5	* Perfluorobutanesulfonic acid (PFBS)	ND		0	ng/L Certifications:	1.52	EPA 537.1	07/01/2022 11:13 07/05/2022 14:27	WEL
307-24-4	* Perfluorohexanoic acid (PFHxA)	ND		0	ng/L Certifications:	1.52	EPA 537.1	07/01/2022 11:13 07/05/2022 14:27	WEL
375-85-9	* Perfluoroheptanoic acid (PFHpA)	ND		0	ng/L Certifications:	1.52	EPA 537.1	07/01/2022 11:13 07/05/2022 14:27	WEL
355-46-4	* Perfluorohexanesulfonic acid (PFHxS)	ND		0	ng/L Certifications:	1.52	EPA 537.1	07/01/2022 11:13 07/05/2022 14:27	WEL
335-67-1	Perfluorooctanoic acid (PFOA)	ND		10	ng/L Certifications:	1.52 NELAC-NY12058	EPA 537.1	07/01/2022 11:13 07/05/2022 14:27	WEL
1763-23-1	Perfluorooctanesulfonic acid (PFOS)	ND		10	ng/L Certifications:	1.52 NELAC-NY12058	EPA 537.1	07/01/2022 11:13 07/05/2022 14:27	WEL
375-95-1	* Perfluorononanoic acid (PFNA)	ND		0	ng/L Certifications:	1.52	EPA 537.1	07/01/2022 11:13 07/05/2022 14:27	WEL
335-76-2	* Perfluorodecanoic acid (PFDA)	ND		0	ng/L Certifications:	1.52	EPA 537.1	07/01/2022 11:13 07/05/2022 14:27	WEL
2058-94-8	* Perfluoroundecanoic acid (PFUnA)	ND		0	ng/L Certifications:	1.52	EPA 537.1	07/01/2022 11:13 07/05/2022 14:27	WEL

Sample Information

Client Sample ID:	**288625-PFAS-Field Blank**	**York Sample ID:**	**22F1242-04**

York Project (SDG) No.	Client Project ID	Matrix	Collection Date/Time	Date Received
22F1242	288625/288617/288673	Drinking Water	June 23, 2022 8:00 am	06/23/2022

PFAS, EPA 537.1 List

Log-in Notes:

Sample Notes:

Sample Prepared by Method: EPA 537.1 SPE DVB

CAS No.	Parameter	Result	Flag	Maximum Contaminant Level MCL, ng/L	Units	Reported to LOQ	Reference Method	Date/Time Analyzed	Analyst
307-55-1	* Perfluorododecanoic acid (PFDoA)	ND		0	ng/L Certifications:	1.52	EPA 537.1	07/01/2022 11:13 07/05/2022 14:27	WEL
72629-94-8	* Perfluorotridecanoic acid (PFTrDA)	ND		0	ng/L Certifications:	1.52	EPA 537.1	07/01/2022 11:13 07/05/2022 14:27	WEL
376-06-7	* Perfluorotetradecanoic acid (PFTA)	ND		0	ng/L Certifications:	1.52	EPA 537.1	07/01/2022 11:13 07/05/2022 14:27	WEL
2355-31-9	* N-MeFOSAA	ND		0	ng/L Certifications:	1.52	EPA 537.1	07/01/2022 11:13 07/05/2022 14:27	WEL
2991-50-6	* N-EtFOSAA	ND		0	ng/L Certifications:	1.52	EPA 537.1	07/01/2022 11:13 07/05/2022 14:27	WEL
756426-58-1	* 9CL-PF3ONS	ND		0	ng/L Certifications:	1.52	EPA 537.1	07/01/2022 11:13 07/05/2022 14:27	WEL
763051-92-9	* 11CL-PF3OUdS	ND		0	ng/L Certifications:	1.52	EPA 537.1	07/01/2022 11:13 07/05/2022 14:27	WEL
13252-13-6	* HFPO-DA (Gen-X)	ND		0	ng/L Certifications:	1.52	EPA 537.1	07/01/2022 11:13 07/05/2022 14:27	WEL
919005-14-4	* ADONA	ND		0	ng/L Certifications:	1.52	EPA 537.1	07/01/2022 11:13 07/05/2022 14:27	WEL

Surrogate Recoveries	Result	Acceptance Range
Surrogate: d5-N-EtFOSAA	*107 %*	*70-130*
Surrogate: 13C-PFDA	*95.5 %*	*70-130*
Surrogate: 13C-PFHxA	*104 %*	*70-130*
Surrogate: M3HFPO-DA	*105 %*	*70-130*

Sample Information

Client Sample ID:	**288617-PFAS-Field Blank**	**York Sample ID:**	**22F1242-05**

York Project (SDG) No.	Client Project ID	Matrix	Collection Date/Time	Date Received
22F1242	288625/288617/288673	Drinking Water	June 23, 2022 9:00 am	06/23/2022

PFAS, EPA 537.1 List

Log-in Notes:

Sample Notes:

Sample Prepared by Method: EPA 537.1 SPE DVB

CAS No.	Parameter	Result	Flag	Maximum Contaminant Level MCL, ng/L	Units	Reported to LOQ	Reference Method	Date/Time Analyzed	Analyst
375-73-5	* Perfluorobutanesulfonic acid (PFBS)	ND		0	ng/L Certifications:	1.92	EPA 537.1	07/01/2022 11:13 07/05/2022 15:04	WEL
307-24-4	* Perfluorohexanoic acid (PFHxA)	ND		0	ng/L Certifications:	1.92	EPA 537.1	07/01/2022 11:13 07/05/2022 15:04	WEL
375-85-9	* Perfluoroheptanoic acid (PFHpA)	ND		0	ng/L Certifications:	1.92	EPA 537.1	07/01/2022 11:13 07/05/2022 15:04	WEL

Sample Information

Client Sample ID: **288617-PFAS-Field Blank** **York Sample ID:** **22F1242-05**

York Project (SDG) No.	Client Project ID	Matrix	Collection Date/Time	Date Received
22F1242	288625/288617/288673	Drinking Water	June 23, 2022 9:00 am	06/23/2022

PFAS, EPA 537.1 List **Log-in Notes:** **Sample Notes:**

Sample Prepared by Method: EPA 537.1 SPE DVB

CAS No.	Parameter	Result	Flag	Maximum Contaminant Level MCL, ng/L	Units	Reported to LOQ	Reference Method	Date/Time Analyzed	Analyst
355-46-4	* Perfluorohexanesulfonic acid (PFHxS)	ND		0	ng/L Certifications:	1.92	EPA 537.1	07/01/2022 11:13 07/05/2022 15:04	WEL
335-67-1	Perfluorooctanoic acid (PFOA)	ND		10	ng/L Certifications:	1.92	EPA 537.1 NELAC-NY12058	07/01/2022 11:13 07/05/2022 15:04	WEL
1763-23-1	Perfluorooctanesulfonic acid (PFOS)	ND		10	ng/L Certifications:	1.92	EPA 537.1 NELAC-NY12058	07/01/2022 11:13 07/05/2022 15:04	WEL
375-95-1	* Perfluorononanoic acid (PFNA)	ND		0	ng/L Certifications:	1.92	EPA 537.1	07/01/2022 11:13 07/05/2022 15:04	WEL
335-76-2	* Perfluorodecanoic acid (PFDA)	ND		0	ng/L Certifications:	1.92	EPA 537.1	07/01/2022 11:13 07/05/2022 15:04	WEL
2058-94-8	* Perfluoroundecanoic acid (PFUnA)	ND		0	ng/L Certifications:	1.92	EPA 537.1	07/01/2022 11:13 07/05/2022 15:04	WEL
307-55-1	* Perfluorododecanoic acid (PFDoA)	ND		0	ng/L Certifications:	1.92	EPA 537.1	07/01/2022 11:13 07/05/2022 15:04	WEL
72629-94-8	* Perfluorotridecanoic acid (PFTrDA)	ND		0	ng/L Certifications:	1.92	EPA 537.1	07/01/2022 11:13 07/05/2022 15:04	WEL
376-06-7	* Perfluorotetradecanoic acid (PFTA)	ND		0	ng/L Certifications:	1.92	EPA 537.1	07/01/2022 11:13 07/05/2022 15:04	WEL
2355-31-9	* N-MeFOSAA	ND		0	ng/L Certifications:	1.92	EPA 537.1	07/01/2022 11:13 07/05/2022 15:04	WEL
2991-50-6	* N-EtFOSAA	ND		0	ng/L Certifications:	1.92	EPA 537.1	07/01/2022 11:13 07/05/2022 15:04	WEL
756426-58-1	* 9CL-PF3ONS	ND		0	ng/L Certifications:	1.92	EPA 537.1	07/01/2022 11:13 07/05/2022 15:04	WEL
763051-92-9	* 11CL-PF3OUdS	ND		0	ng/L Certifications:	1.92	EPA 537.1	07/01/2022 11:13 07/05/2022 15:04	WEL
13252-13-6	* HFPO-DA (Gen-X)	ND		0	ng/L Certifications:	1.92	EPA 537.1	07/01/2022 11:13 07/05/2022 15:04	WEL
919005-14-4	* ADONA	ND		0	ng/L Certifications:	1.92	EPA 537.1	07/01/2022 11:13 07/05/2022 15:04	WEL

Surrogate Recoveries	Result	Acceptance Range
Surrogate: d5-N-EtFOSAA	*95.7 %*	*70-130*
Surrogate: 13C-PFDA	*82.6 %*	*70-130*
Surrogate: 13C-PFHxA	*87.4 %*	*70-130*
Surrogate: M3HFPO-DA	*91.1 %*	*70-130*

Sample Information

Client Sample ID: **288673-PFAS-Field Blank** **York Sample ID:** **22F1242-06**

York Project (SDG) No.	Client Project ID	Matrix	Collection Date/Time	Date Received
22F1242	288625/288617/288673	Drinking Water	June 23, 2022 9:20 am	06/23/2022

Sample Information

Client Sample ID: **288673-PFAS-Field Blank** **York Sample ID:** **22F1242-06**

York Project (SDG) No.	Client Project ID	Matrix	Collection Date/Time	Date Received
22F1242	288625/288617/288673	Drinking Water	June 23, 2022 9:20 am	06/23/2022

PFAS, EPA 537.1 List **Log-in Notes:** **Sample Notes:**

Sample Prepared by Method: EPA 537.1 SPE DVB

CAS No.	Parameter	Result	Flag	Maximum Contaminant Level MCL, ng/L	Units	Reported to LOQ	Reference Method	Date/Time Analyzed	Analyst
375-73-5	* Perfluorobutanesulfonic acid (PFBS)	ND		0	ng/L Certifications:	2.00	EPA 537.1	07/01/2022 11:13 07/05/2022 15:18	WEL
307-24-4	* Perfluorohexanoic acid (PFHxA)	ND		0	ng/L Certifications:	2.00	EPA 537.1	07/01/2022 11:13 07/05/2022 15:18	WEL
375-85-9	* Perfluoroheptanoic acid (PFHpA)	ND		0	ng/L Certifications:	2.00	EPA 537.1	07/01/2022 11:13 07/05/2022 15:18	WEL
355-46-4	* Perfluorohexanesulfonic acid (PFHxS)	ND		0	ng/L Certifications:	2.00	EPA 537.1	07/01/2022 11:13 07/05/2022 15:18	WEL
335-67-1	Perfluorooctanoic acid (PFOA)	ND		10	ng/L Certifications: NELAC-NY12058	2.00	EPA 537.1	07/01/2022 11:13 07/05/2022 15:18	WEL
1763-23-1	Perfluorooctanesulfonic acid (PFOS)	ND		10	ng/L Certifications: NELAC-NY12058	2.00	EPA 537.1	07/01/2022 11:13 07/05/2022 15:18	WEL
375-95-1	* Perfluorononanoic acid (PFNA)	ND		0	ng/L Certifications:	2.00	EPA 537.1	07/01/2022 11:13 07/05/2022 15:18	WEL
335-76-2	* Perfluorodecanoic acid (PFDA)	ND		0	ng/L Certifications:	2.00	EPA 537.1	07/01/2022 11:13 07/05/2022 15:18	WEL
2058-94-8	* Perfluoroundecanoic acid (PFUnA)	ND		0	ng/L Certifications:	2.00	EPA 537.1	07/01/2022 11:13 07/05/2022 15:18	WEL
307-55-1	* Perfluorododecanoic acid (PFDoA)	ND		0	ng/L Certifications:	2.00	EPA 537.1	07/01/2022 11:13 07/05/2022 15:18	WEL
72629-94-8	* Perfluorotridecanoic acid (PFTrDA)	ND		0	ng/L Certifications:	2.00	EPA 537.1	07/01/2022 11:13 07/05/2022 15:18	WEL
376-06-7	* Perfluorotetradecanoic acid (PFTA)	ND		0	ng/L Certifications:	2.00	EPA 537.1	07/01/2022 11:13 07/05/2022 15:18	WEL
2355-31-9	* N-MeFOSAA	ND		0	ng/L Certifications:	2.00	EPA 537.1	07/01/2022 11:13 07/05/2022 15:18	WEL
2991-50-6	* N-EtFOSAA	ND		0	ng/L Certifications:	2.00	EPA 537.1	07/01/2022 11:13 07/05/2022 15:18	WEL
756426-58-1	* 9CL-PF3ONS	ND		0	ng/L Certifications:	2.00	EPA 537.1	07/01/2022 11:13 07/05/2022 15:18	WEL
763051-92-9	* 11CL-PF3OUdS	ND		0	ng/L Certifications:	2.00	EPA 537.1	07/01/2022 11:13 07/05/2022 15:18	WEL
13252-13-6	* HFPO-DA (Gen-X)	ND		0	ng/L Certifications:	2.00	EPA 537.1	07/01/2022 11:13 07/05/2022 15:18	WEL
919005-14-4	* ADONA	ND		0	ng/L Certifications:	2.00	EPA 537.1	07/01/2022 11:13 07/05/2022 15:18	WEL

Surrogate Recoveries	Result	Acceptance Range
Surrogate: d5-N-EtFOSAA	*96.6 %*	*70-130*
Surrogate: 13C-PFDA	*91.1 %*	*70-130*
Surrogate: 13C-PFHxA	*107 %*	*70-130*
Surrogate: M3HFPO-DA	*113 %*	*70-130*

Analytical Batch Summary

Batch ID: BF21540 **Preparation Method:** EPA 522 **Prepared By:** SJB

YORK Sample ID	Client Sample ID	Preparation Date
22F1242-01	288625	06/24/22
22F1242-02	288617	06/24/22
22F1242-03	288673	06/24/22
BF21540-BLK1	Blank	06/24/22
BF21540-BS1	LCS	06/24/22
BF21540-BS2	LCS	06/24/22
BF21540-DUP1	Duplicate	06/24/22
BF21540-MS1	Matrix Spike	06/24/22

Batch ID: BG20029 **Preparation Method:** EPA 537.1 SPE DVB **Prepared By:** WEL

YORK Sample ID	Client Sample ID	Preparation Date
22F1242-01	288625	07/01/22
22F1242-02	288617	07/01/22
22F1242-03	288673	07/01/22
22F1242-04	288625-PFAS-Field Blank	07/01/22
22F1242-05	288617-PFAS-Field Blank	07/01/22
22F1242-06	288673-PFAS-Field Blank	07/01/22
BG20029-BLK1	Blank	07/01/22
BG20029-BS1	LCS	07/01/22
BG20029-DUP1	Duplicate	07/01/22
BG20029-MS1	Matrix Spike	07/01/22

Semivolatile Organic Compounds by GC/MS/SIM - Quality Control Data

York Analytical Laboratories, Inc.

Analyte	Result	Reporting Limit	Units	Spike Level	Source* Result	%REC	%REC Limits	Flag	RPD	RPD Limit	Flag
Batch BF21540 - EPA 522											
Blank (BF21540-BLK1)							Prepared: 06/24/2022 Analyzed: 06/27/2022				
1,4-Dioxane	ND	0.200	ug/L								
Surrogate: 1,4-Dioxane-d8	*2.80*		*"*	*2.50*		*112*	*70-130*				
LCS (BF21540-BS1)							Prepared: 06/24/2022 Analyzed: 06/27/2022				
1,4-Dioxane	4.66	0.200	ug/L	5.00		93.2	70-130				
Surrogate: 1,4-Dioxane-d8	*2.20*		*"*	*2.50*		*88.0*	*70-130*				
LCS (BF21540-BS2)							Prepared: 06/24/2022 Analyzed: 06/27/2022				
1,4-Dioxane	8.86	0.200	ug/L	10.0		88.6	70-130				
Surrogate: 1,4-Dioxane-d8	*2.20*		*"*	*2.50*		*88.0*	*70-130*				
Duplicate (BF21540-DUP1)	*Source sample: 22F0847-01 (Duplicate)						Prepared: 06/24/2022 Analyzed: 06/27/2022				
1,4-Dioxane	ND	0.200	ug/L		ND					30	
Surrogate: 1,4-Dioxane-d8	*2.60*		*"*	*2.50*		*104*	*70-130*				
Matrix Spike (BF21540-MS1)	*Source sample: 22F0765-01 (Matrix Spike)						Prepared: 06/24/2022 Analyzed: 06/27/2022				
1,4-Dioxane	4.17	0.200	ug/L	5.00	ND	83.4	70-130				
Surrogate: 1,4-Dioxane-d8	*2.40*		*"*	*2.50*		*96.0*	*70-130*				

PFAS Target compounds by LC/MS-MS - Quality Control Data

York Analytical Laboratories, Inc.

Analyte	Result	Reporting Limit	Units	Spike Level	Source* Result	%REC	%REC Limits	Flag	RPD	RPD Limit	Flag
Batch BG20029 - EPA 537.1 SPE DVB											
Blank (BG20029-BLK1)								Prepared: 07/01/2022 Analyzed: 07/05/2022			
Perfluorobutanesulfonic acid (PFBS)	ND	2.00	ng/L								
Perfluorohexanoic acid (PFHxA)	ND	2.00	"								
Perfluoroheptanoic acid (PFHpA)	ND	2.00	"								
Perfluorohexanesulfonic acid (PFHxS)	ND	2.00	"								
Perfluorooctanoic acid (PFOA)	ND	2.00	"								
Perfluorooctanesulfonic acid (PFOS)	ND	2.00	"								
Perfluorononanoic acid (PFNA)	ND	2.00	"								
Perfluorodecanoic acid (PFDA)	ND	2.00	"								
Perfluoroundecanoic acid (PFUnA)	ND	2.00	"								
Perfluorododecanoic acid (PFDoA)	ND	2.00	"								
Perfluorotridecanoic acid (PFTrDA)	ND	2.00	"								
Perfluorotetradecanoic acid (PFTA)	ND	2.00	"								
N-MeFOSAA	ND	2.00	"								
N-EtFOSAA	ND	2.00	"								
9CL-PF3ONS	ND	2.00	"								
11CL-PF3OUdS	ND	2.00	"								
HFPO-DA (Gen-X)	ND	2.00	"								
ADONA	ND	2.00	"								
Surrogate: d5-N-EtFOSAA	*287*		*"*	*320*		*89.5*	*70-130*				
Surrogate: 13C-PFDA	*69.4*		*"*	*80.0*		*86.8*	*70-130*				
Surrogate: 13C-PFHxA	*75.8*		*"*	*80.0*		*94.7*	*70-130*				
Surrogate: M3HFPO-DA	*73.2*		*"*	*80.0*		*91.5*	*70-130*				
LCS (BG20029-BS1)								Prepared: 07/01/2022 Analyzed: 07/05/2022			
Perfluorobutanesulfonic acid (PFBS)	32.3	2.00	ng/L	35.4		91.1	70-130				
Perfluorohexanoic acid (PFHxA)	34.8	2.00	"	40.0		87.0	70-130				
Perfluoroheptanoic acid (PFHpA)	36.5	2.00	"	40.0		91.2	70-130				
Perfluorohexanesulfonic acid (PFHxS)	35.4	2.00	"	38.0		93.0	70-130				
Perfluorooctanoic acid (PFOA)	37.9	2.00	"	40.0		94.7	70-130				
Perfluorooctanesulfonic acid (PFOS)	37.2	2.00	"	38.4		96.9	70-130				
Perfluorononanoic acid (PFNA)	38.4	2.00	"	40.0		95.9	70-130				
Perfluorodecanoic acid (PFDA)	32.7	2.00	"	40.0		81.7	70-130				
Perfluoroundecanoic acid (PFUnA)	36.4	2.00	"	40.0		91.0	70-130				
Perfluorododecanoic acid (PFDoA)	36.4	2.00	"	40.0		91.1	70-130				
Perfluorotridecanoic acid (PFTrDA)	31.3	2.00	"	40.0		78.2	70-130				
Perfluorotetradecanoic acid (PFTA)	32.5	2.00	"	40.0		81.2	70-130				
N-MeFOSAA	37.4	2.00	"	40.0		93.5	70-130				
N-EtFOSAA	37.5	2.00	"	40.0		93.6	70-130				
9CL-PF3ONS	33.9	2.00	"	37.4		90.6	60-130				
11CL-PF3OUdS	31.1	2.00	"	37.8		82.3	60-130				
HFPO-DA (Gen-X)	33.8	2.00	"	40.0		84.6	60-130				
ADONA	32.7	2.00	"	37.8		86.5	60-130				
Surrogate: d5-N-EtFOSAA	*337*		*"*	*320*		*105*	*70-130*				
Surrogate: 13C-PFDA	*74.7*		*"*	*80.0*		*93.3*	*70-130*				
Surrogate: 13C-PFHxA	*83.2*		*"*	*80.0*		*104*	*70-130*				
Surrogate: M3HFPO-DA	*78.9*		*"*	*80.0*		*98.6*	*70-130*				

Batch BG20029 - EPA 537.1 SPE DVB

Analyte	Result	Reporting Limit	Units	Spike Level	Source* Result	%REC	%REC Limits	Flag	RPD	RPD Limit	Flag
Duplicate (BG20029-DUP1)	*Source sample: 22F1242-04 (288625-PFAS-Field Blank)							Prepared: 07/01/2022 Analyzed: 07/05/2022			
Perfluorobutanesulfonic acid (PFBS)	ND	2.17	ng/L		ND					25	
Perfluorohexanoic acid (PFHxA)	ND	2.17	"		ND					25	
Perfluoroheptanoic acid (PFHpA)	ND	2.17	"		ND					25	
Perfluorohexanesulfonic acid (PFHxS)	ND	2.17	"		ND					25	
Perfluorooctanoic acid (PFOA)	ND	2.17	"		ND					25	
Perfluorooctanesulfonic acid (PFOS)	ND	2.17	"		ND					25	
Perfluorononanoic acid (PFNA)	ND	2.17	"		ND					25	
Perfluorodecanoic acid (PFDA)	ND	2.17	"		ND					25	
Perfluoroundecanoic acid (PFUnA)	ND	2.17	"		ND					25	
Perfluorododecanoic acid (PFDoA)	ND	2.17	"		ND					25	
Perfluorotridecanoic acid (PFTrDA)	ND	2.17	"		ND					25	
Perfluorotetradecanoic acid (PFTA)	ND	2.17	"		ND					25	
N-MeFOSAA	ND	2.17	"		ND					25	
N-EtFOSAA	ND	2.17	"		ND					25	
9CL-PF3ONS	ND	2.17	"		ND					25	
11CL-PF3OUdS	ND	2.17	"		ND					25	
HFPO-DA (Gen-X)	ND	2.17	"		ND					25	
ADONA	ND	2.17	"		ND					25	
Surrogate: d5-N-EtFOSAA	*348*		*"*	*348*		*100*	*70-130*				
Surrogate: 13C-PFDA	*77.2*		*"*	*87.0*		*88.8*	*70-130*				
Surrogate: 13C-PFHxA	*87.6*		*"*	*87.0*		*101*	*70-130*				
Surrogate: M3HFPO-DA	*84.0*		*"*	*87.0*		*96.6*	*70-130*				
Matrix Spike (BG20029-MS1)	*Source sample: 22F1306-01 (Matrix Spike)							Prepared: 07/01/2022 Analyzed: 07/05/2022			
Perfluorobutanesulfonic acid (PFBS)	58.9	2.00	ng/L	70.8	ND	83.1	70-130				
Perfluorohexanoic acid (PFHxA)	64.6	2.00	"	80.0	ND	80.7	70-130				
Perfluoroheptanoic acid (PFHpA)	69.6	2.00	"	80.0	ND	87.0	70-130				
Perfluorohexanesulfonic acid (PFHxS)	71.2	2.00	"	76.0	ND	93.7	70-130				
Perfluorooctanoic acid (PFOA)	72.3	2.00	"	80.0	ND	90.4	70-130				
Perfluorooctanesulfonic acid (PFOS)	68.0	2.00	"	76.8	ND	88.6	70-130				
Perfluorononanoic acid (PFNA)	68.4	2.00	"	80.0	ND	85.5	70-130				
Perfluorodecanoic acid (PFDA)	65.0	2.00	"	80.0	ND	81.2	70-130				
Perfluoroundecanoic acid (PFUnA)	67.1	2.00	"	80.0	ND	83.9	70-130				
Perfluorododecanoic acid (PFDoA)	64.8	2.00	"	80.0	ND	81.0	70-130				
Perfluorotridecanoic acid (PFTrDA)	60.5	2.00	"	80.0	ND	75.6	70-130				
Perfluorotetradecanoic acid (PFTA)	63.2	2.00	"	80.0	ND	79.0	70-130				
N-MeFOSAA	73.5	2.00	"	80.0	ND	91.8	70-130				
N-EtFOSAA	69.6	2.00	"	80.0	ND	87.0	70-130				
9CL-PF3ONS	67.2	2.00	"	74.8	ND	89.9	70-130				
11CL-PF3OUdS	59.4	2.00	"	75.6	ND	78.5	70-130				
HFPO-DA (Gen-X)	59.2	2.00	"	80.0	ND	74.0	70-130				
ADONA	60.6	2.00	"	75.6	ND	80.2	50-130				
Surrogate: d5-N-EtFOSAA	*304*		*"*	*320*		*94.9*	*70-130*				
Surrogate: 13C-PFDA	*70.4*		*"*	*80.0*		*88.0*	*70-130*				
Surrogate: 13C-PFHxA	*77.0*		*"*	*80.0*		*96.2*	*70-130*				
Surrogate: M3HFPO-DA	*72.0*		*"*	*80.0*		*90.0*	*70-130*				

Sample and Data Qualifiers Relating to This Work Order

Definitions and Other Explanations

*	Analyte is not certified or the state of the samples origination does not offer certification for the Analyte.
ND	NOT DETECTED - the analyte is not detected at the Reported to level (LOQ/RL or LOD/MDL)
RL	REPORTING LIMIT - the minimum reportable value based upon the lowest point in the analyte calibration curve.
LOQ	LIMIT OF QUANTITATION - the minimum concentration of a target analyte that can be reported within a specified degree of confidence. This is the lowest point in an analyte calibration curve that has been subjected to all steps of the processing/analysis and verified to meet defined criteria. This is based upon NELAC 2009 Standards and applies to all analyses.
LOD	LIMIT OF DETECTION - a verified estimate of the minimum concentration of a substance in a given matrix that an analytical process can reliably detect. This is based upon NELAC 2009 Standards and applies to all analyses conducted under the auspices of EPA SW-846.
MDL	METHOD DETECTION LIMIT - a statistically derived estimate of the minimum amount of a substance an analytical system can reliably detect with a 99% confidence that the concentration of the substance is greater than zero. This is based upon 40 CFR Part 136 Appendix B and applies only to EPA 600 and 200 series methods.
Reported to	This indicates that the data for a particular analysis is reported to either the LOD/MDL, or the LOQ/RL. In cases where the "Reported to" is located above the LOD/MDL, any value between this and the LOQ represents an estimated value which is "J" flagged accordingly. This applies to volatile and semi-volatile target compounds only.
NR	Not reported
RPD	Relative Percent Difference
Wet	The data has been reported on an as-received (wet weight) basis
Low Bias	Low Bias flag indicates that the recovery of the flagged analyte is below the laboratory or regulatory lower control limit. The data user should take note that this analyte may be biased low but should evaluate multiple lines of evidence including the LCS and site-specific MS/MSD data to draw bias conclusions. In cases where no site-specific MS/MSD was requested, only the LCS data can be used to evaluate such bias.
High Bias	High Bias flag indicates that the recovery of the flagged analyte is above the laboratory or regulatory upper control limit. The data user should take note that this analyte may be biased high but should evaluate multiple lines of evidence including the LCS and site-specific MS/MSD data to draw bias conclusions. In cases where no site-specific MS/MSD was requested, only the LCS data can be used to evaluate such bias.
Non-Dir.	Non-dir. flag (Non-Directional Bias) indicates that the Relative Percent Difference (RPD) (a measure of precision) among the MS and MSD data is outside the laboratory or regulatory control limit. This alerts the data user where the MS and MSD are from site-specific samples that the RPD is high due to either non-homogeneous distribution of target analyte between the MS/MSD or indicates poor reproducibility for other reasons.
MCL	This is the Maximum Contaminant Level in ng/L (ppt) establised by the NYSDOH for these compounds wheree an MCL is reported. Exceedences are flagged according.

YORK
ANALYTICAL LABORATORIES INC

Field Chain-of-Custody Record

York Analytical Laboratories, Inc. (YORK)'s Standard Terms & Conditions are listed on the back side of this document.
This document serves as your written authorization for YORK to proceed with the analyses requested below.
Your signature binds you to YORK's Standard Terms & Conditions.

YORK Project No. 22F1242

120 Research Drive Stratford, CT 06615 | 132-02 89th Ave Queens, NY 11418 | clientservices@yorklab.com | www.yorklab.com | 800-306-YORK | 800-306-9675

Page ______ of ______

YOUR Information	Report To:	Invoice To:
Company:	Company: Agua Environmental Lab	Company:
Address:	Address:	Address:
Phone.:	Phone.:	Phone.:
Contact:	Contact:	Contact:
E-mail:	E-mail:	E-mail:

YOUR Project Number

YOUR Project Name

YOUR PO#:

Turn-Around Time
- RUSH - Next Day ☐
- RUSH - Two Day ☐
- RUSH - Three Day ☐
- RUSH - Four Day ☐
- **Standard (5-7 Day)** ☐

Please print clearly and legibly. All information must be complete. Samples will not be logged in and the turn-around-time clock will not begin until any questions by YORK are resolved.

Samples Collected by: (print AND sign your name)

Matrix Codes
- S - soil / solid
- GW - groundwater
- [✓ DW - drinking water]
- WW - wastewater
- O - Oil | Other

Samples From
- New York ☑
- New Jersey ☐
- Connecticut ☐
- Pennsylvania ☐
- Other:

Report / EDD Type (circle selections)

Summary Report	CT RCP	Standard Excel EDD
QA Report	CT RCP DQA/DUE	EQuIS (Standard)
NY ASP A Package	NJDEP Reduced Deliverables	NYSDEC EQuIS
NY ASP B Package	NJDKQP	NJDEP SRP HazSite
		Other:

YORK Reg. Comp.
Compared to the following Regulation(s): (please fill in)

Sample Identification	Sample Matrix	Date/Time Sampled	Analysis Requested	Container Description
288625	DW	6/23/22 8:00 am	PFAS Method 537 18 Compound &	1,4 Dioxane
288617	DW	6/23/22 9:00 am	PFAS Method 537 18 Compound &	1,4 Dioxane
288673	DW	6/23/22 9:20 am	PFAs Method 537 18 Compound +	1,4 Dioxane

Comments:

Samples iced/chilled at time of lab pickup? circle Yes or No

Preservation: (check all that apply)
HCl ____ MeOH ____ HNO3 ____ H2SO4 ____ NaOH ____
ZnAc ____ Ascorbic Acid ____ Other: ________________

Special Instruction
- Field Filtered ☐
- Lab to Filter ☐

amples Relinquished by / Company Date/Time 6/23/22 12:55 pm	1. Samples Received by / Company Date/Time	2. Samples Relinquished by / Company S Beeman Date/Time 6/23 13:55
amples Received by / Company Date/Time	3. Samples Relinquished by / Company Date/Time	3. Samples Received by / Company Date/Time
amples Relinquished by / Company Date/Time	4. Samples Received by / Company Date/Time	Samples Received in LAB by Date/Time 6/23/22 1355 Temperature 1.0 Degrees C

AQUA ENVIRONMENTAL LAB
56 Church Hill Road • Newtown, CT 06470 • (203) 270-9973
A York Analytical Company
YORK
ANALYTICAL LABORATORIES INC

Report of Analysis

Name: WSP, USA
4 Research Dr.
Ste. 204
Shelton, CT 06484
Sample Date: 6/20/2022 2:03 PM
Receipt Date: 6/20/2022 2:03 PM
Report Date: 7/25/2022
Sample Site: Summit Well 1

Sample ID#: 288608
Sample Type: Drinking Water
Sampler: WSP

Parameter	Sample Result	Units	Limits	Method	RL	Analysis Date / Time
Organic Compounds						
Propylene Glycol	1.5	mg/L	No Limit Set	SW8015	1	6/27/2022 14:05

ND = Not Detected
* = Above Specified Limit

Report Approved by: Thomas J. Braun
Lab Director

CT Lic PH-0787 NY Lic 11706

AquaEnvLab.com
YorkLab.com
203 270 9973

Analytical results relate to the samples as received at the laboratory. Report shall not be reproduced except in its entirety without written approval from the laboratory.

EnviroTest
Laboratories Inc.

ANALYTICAL REPORT

Job Number: 420-227330-1

SDG Number: Summit Club Well 1

Job Description: WSP USA

For:
WSP USA
4 Research Drive
Shelton, CT 06464

Attention: Stacy Stieber

Mary Hernandez
Customer Service Manager
reports@envirotestlaboratories.com
08/16/2022

EnviroTest Laboratories, LLC. Certifications and Approvals: NYSDOH 10142, NJDEP NY015, CTDOPH PH-0554

Envirotest Laboratories
315 Fullerton Avenue, Newburgh, NY 12550
Tel (845) 562-0890 Fax (845) 562-0841 www.envirotestlaboratories.com

METHOD SUMMARY

Client: WSP USA

Job Number: 420-227330-1
SDG Number: Summit Club Well 1

Description	Lab Location	Method	Preparation Method
Matrix: Water			
General Sub Contract Method		Subcontract	

Lab References:

=

Method References:

SAMPLE SUMMARY

Client: WSP USA

Job Number: 420-227330-1
SDG Number: Summit Club Well 1

Lab Sample ID	Client Sample ID	Client Matrix	Date/Time Sampled	Date/Time Received
420-227330-1	Well 1	Water	06/22/2022 0850	06/22/2022 1145

Analytical Services, Inc.

Page ____ of ____

CHAIN OF CUSTODY RECORD

Ship to: Analytical Services, Inc., 130 Allen Brook Lane, Williston, VT 05495, Attn: Sample Management
Phone: 1-800-723-4432 or 802-878-5138 • Fax: 802-878-6765 *Web site: www.analyticalservices.com*

Submitted By: WSP USA
4 Research Drive, Ste 204
Shelton, CT 06484
Phone: 475-882-1723 Email: stacy.stieber@wsp.com

Report To: Stacy Stieber
WSP USA
4 Research Drive, Ste 204
Shelton CT 06484
Phone: 475-882-1723 Email: stacy.stieber@wsp.com

Project Name: Summit Club

Job Site:

P.O. Number: 31403576.002

Invoice To:

Phone: Email:

Sample Identification*	Sample Collection			Sample Matrix (check one)						Analysis Requested	Lab Use Only
	Date (Start)	Time (Start)	Sampler Initials	Water - Raw	Water - Finished	Waste Water	Biosolids	Soil/Sediment	Other		Temp (°C)
Well 1	6/22/22	850	SS	X						MPA w/ IFA	

*Sample ID should match ID written on the sample containers and data sheets. Sample ID will appear on the report for identification.

Relinquished By (signature)	Date/Time	Received By (signature)	Date/Time
/WSP	6/22/22 11:45		6/22/22 1145.

Field Comments:

Lab Comments:

Page 4 of 5

08/16/2022

White – To accompany samples • Yellow – Sampler Copy

LOGIN SAMPLE RECEIPT CHECK LIST

Client: WSP USA

Job Number: 420-227330-1
SDG Number: Summit Club Well 1

Login Number: **227330**

Question	T/F/NA	Comment
Samples were collected by ETL employee as per SOP-SAM-1	NA	
The cooler's custody seal, if present, is intact.	NA	
The cooler or samples do not appear to have been compromised or tampered with.	True	
Samples were received on ice.	True	
Cooler Temperature is recorded.	True	2.2C
Cooler Temp. is within method specified range.(0-4 C PW, 0-6 C NPW, or BAC <10 C	True	
If false, was sample received on ice within 6 hours of collection.	NA	
Based on above criteria cooler temperature is acceptable.	True	
COC is present.	True	
COC is filled out in ink and legible.	True	
COC is filled out with all pertinent information.	True	
There are no discrepancies between the sample IDs on the containers and the COC.	True	
Samples are received within Holding Time.	True	
Sample containers have legible labels.	True	
Containers are not broken or leaking.	True	
Sample collection date/times are provided.	True	
Appropriate sample containers are used.	True	
Sample bottles are completely filled.	True	
There is sufficient vol. for all requested analyses, incl. any requested MS/MSDs	True	
VOA sample vials do not have headspace or bubble is <6mm (1/4") in diameter.	NA	
If necessary, staff have been informed of any short hold time or quick TAT needs	True	
Multiphasic samples are not present.	True	
Samples do not require splitting or compositing.	True	

ANALYTICAL SERVICES, INC.
Microbiological Testing, Research and Consulting

130 Allen Brook Ln., PO Box 515, Williston, VT 05495 USA
1.800.723.4432 / 802.878.5138 Fax: 802.878.6765
www.analyticalservices.com

8/15/2022

Ron Bayer
EnviroTest Laboratories
315 Fullerton Ave
Newburgh, NY 12550

Subj.: ASI Report 69086

Dear Ron,

Enclosed please find the results of Microscopic Particulate Analysis (MPA) performed by Analytical Services, Inc. (ASI).

Sample(s) covered in this report were received at ASI on: 6/23/2022

This report contains the following number of pages (total): 5

This report concerns only the samples referenced herein. These results were generated under ASI's quality system, which is in accordance with the NELAC (TNI) standard. Deviations, if any, are noted.

Exceptions: NA

This report shall not be reproduced, except in full, without ASI's written permission.

Thank you for using ASI for your microbiological testing needs. If you have any questions, please contact us at 800-723-4432.

Sincerely,
ANALYTICAL SERVICES, INC. (ASI)

RWarden
Harry D. Christman, Ph.D. (for)
Technical Director

Microscopic Particulate Analysis (MPA)

Sample Information

Client	EnviroTest Laboratories	Volume Sampled (gal)	788.4
Site	Summit Club	Filter Color	Off-White
Water Type	Raw/Well	Sediment Volume (mL)	0.3
Client Sample ID	Well 1	Analysis Start	6/23/22 12:00
ASI Sample #	69086-01	Analysis End	8/4/22

MPA Data (data per 100 gal.)

Vol. Examined at 150x (gal.)	100	Detection Limit at 150X =	1.0
Vol. Examined at 300x (gal.)	NA	Detection Limit at 300X =	NA
Amorphous Debris	Uniform	Iron Bacteria	ND
Vegetative Debris w/ chlorophyll	ND	Crustaceans	ND
Veg. Debris w/o chlorophyll	1	Crustacean Parts/Eggs	ND
Diatoms w/ chlorophyll (300X)	ND	Water Mites	ND
Diatoms w/o chlorophyll (300X)	ND	Gastrotrichs	ND
Other Algae (300X, see below)	ND	Tardigrades	ND
Coccidia (300x)	ND	Nematodes/N. Eggs	ND
Rotifiers / Rotifier Eggs	ND	Invertebrate Eggs	ND
Spores	ND	Annelids	ND
Pollen	ND	Amoeba	ND
Insects/Larvae	ND	Protozoa (300X, non-Crypto/Giardia)	ND

Cryptosporidium and Giardia Data

Volume Examined (gal.) 394.2

	RESULTS	
	Examined	Per 100gal
Cryptosporidium Oocysts:	0	<0.25
Giardia Cysts:	0	<0.25

MPA Risk Rating Score (per EPA Consensus Method)

Numerical Score	0	Risk Rating	Low

Other

Algae Observed	NA
Comments	NA

Methods: MPA - SOP based on EPA Consensus Method (EPA 910/9-92-029)

Cryptosporidium & Giardia - SOP based on purification, staining & exam procedures in EPA 1623/1623.1

Notes MPA Risk Rating Tables were developed by USEPA Region 10 from limited data; interpret with caution.

MPA Risk Rating Score - if less than 100 gallons was examined, interpret with caution.

Microscopic Particulate Analysis (MPA)

Sample Information

Client	EnviroTest Laboratories	Volume Sampled (gal)	562.2
Site	Summit Club	Filter Color	Off-White
Water Type	Raw/Well	Sediment Volume (mL)	0.2
Client Sample ID	Well 6A	Analysis Start	6/23/22 12:35
ASI Sample #	69086-02	Analysis End	8/4/22

MPA Data (data per 100 gal.)

Vol. Examined at 150x (gal.)	100	Detection Limit at 150X =	1.0
Vol. Examined at 300x (gal.)	NA	Detection Limit at 300X =	NA
Amorphous Debris	Uniform	Iron Bacteria	ND
Vegetative Debris w/ chlorophyll	ND	Crustaceans	ND
Veg. Debris w/o chlorophyll	4	Crustacean Parts/Eggs	ND
Diatoms w/ chlorophyll (300X)	ND	Water Mites	ND
Diatoms w/o chlorophyll (300X)	ND	Gastrotrichs	ND
Other Algae (300X, see below)	ND	Tardigrades	ND
Coccidia (300x)	ND	Nematodes/N. Eggs	ND
Rotifiers / Rotifier Eggs	ND	Invertebrate Eggs	ND
Spores	ND	Annelids	ND
Pollen	ND	Amoeba	ND
Insects/Larvae	ND	Protozoa (300X, non-Crypto/Giardia)	ND

Cryptosporidium and Giardia Data

Volume Examined (gal.)	281.1	RESULTS	
		Examined	Per 100gal
	Cryptosporidium Oocysts:	0	<0.36
	Giardia Cysts:	0	<0.36

MPA Risk Rating Score (per EPA Consensus Method)

Numerical Score	0	Risk Rating	Low

Other

Algae Observed	NA
Comments	NA

Methods:	MPA - SOP based on EPA Consensus Method (EPA 910/9-92-029)
	Cryptosporidium & Giardia - SOP based on purification, staining & exam procedures in EPA 1623/1623.1
Notes	MPA Risk Rating Tables were developed by USEPA Region 10 from limited data; interpret with caution.
	MPA Risk Rating Score - if less than 100 gallons was examined, interpret with caution.

3/5

227330

Page ____ of ____

Analytical Services, Inc.

CHAIN OF CUSTODY RECORD

Ship to: Analytical Services, Inc., 130 Allen Brook Lane, Williston, VT 05495, Attn: Sample Management
Phone: 1-800-723-4432 or 802-878-5138 • Fax: 802-878-6765 *Web site: www.analyticalservices.com*

Submitted By: WSP USA
4 Research Drive, Ste 204
Shelton, CT 06484

Phone: 475-882-1723 Email: stacy.stieber@wsp.com

Report To: Stacy Stieber
WSP USA
4 Research Drive, Ste 204
Shelton, CT 06484

Phone: 475-882-1723 Email: stacy.stieber@wsp.com

Project Name: Summit Club

Job Site:

P.O. Number: 31403576.002

Invoice To:

Phone: Email:

Sample Identification*	Sample Collection			Sample Matrix check one						Analysis Requested	Lab Use Only Temp (°C)
	Date (Start)	Time (Start)	Sampler Initials	Water - Raw	Water - Finished	Waste Water	Biosolids	Soil/Sediment	Other		
Well 1	6/22/22	850	SZ	X						MPA w/ IFA	8.7°

*Sample ID should match ID written on the sample containers and data sheets. Sample ID will appear on the report for identification.

Relinquished By (signature)	Date/Time	Received By (signature)	Date/Time
	6/22/22 1145		6/22/22 1145
	6/22/22 1525		6/23/22 1040

Field Comments:

Lab Comments:

1/5

White – To accompany samples • Yellow – Sampler Copy

227328

Analytical Services, Inc.

Page ____ of ____

CHAIN OF CUSTODY RECORD

Ship to: Analytical Services, Inc., 130 Allen Brook Lane, Williston, VT 05495, Attn: Sample Management
Phone: 1-800-723-4432 or 802-878-5138 • Fax: 802-878-6765 *Web site: www.analyticalservices.com*

Submitted By: WSP USA
4 Research Drive, Suite 204
Shelton, CT 06484

Phone: 475-882-1723 Email: stacy.stieber@wsp.com

Report To: Stacy Stieber
WSP USA
~~Shelton~~ 4 Research Drive
Shelton, CT 06484

Phone: 475-882-1723 Email: stacy.stieber@wsp.com

Project Name	Summit Club
Job Site	31403576.002
P.O. Number	

Invoice To: ____________________

Phone: __________ Email: __________

Sample Identification*	Sample Collection			Sample Matrix						Analysis Requested	Lab Use Only
				check one							
	Date (Start)	Time (Start)	Sampler Initials	Water - Raw	Water - Finished	Waste Water	Biosolids	Soil/Sediment	Other		Temp (°C)
Well 6A	6/22/22	855	SZ	X						MPA w/ IFA	6.0°

*Sample ID should match ID written on the sample containers and data sheets. Sample ID will appear on the report for identification.

Relinquished By (signature)	Date/Time	Received By (signature)	Date/Time
	6/22/22 1140		6/22/22 1145
	6/22/22 1520		6/23/22 1040

Field Comments:

Lab Comments:

r/r

White – To accompany samples • Yellow – Sampler Copy

WELL 3

AQUA ENVIRONMENTAL LAB
56 Church Hill Road • Newtown, CT 06470 • (203) 270-9973
A York Analytical Company
YORK
ANALYTICAL LABORATORIES INC

Report of Analysis

Name:	WSP, USA 4 Research Dr. Ste. 204 Shelton, CT 06484	**Sample ID#:**	288621
Sample Date:	6/20/2022 2:03 PM	**Sample Type:**	Drinking Water
Receipt Date:	6/20/2022 2:03 PM	**Sampler:**	WSP
Report Date:	7/11/2022		
Sample Site:	Summit Well 3		

Parameter	Sample Result	Units	Limits	Method	RL	Analysis Date / Time
Biological						
Coliform Bacteria	present *	none	0	SM9223B-04	0	6/23/2022 16:30
e Coli Bacteria	absent	none	0	SM9223B-04	0	6/23/2022 16:30
Heterotrophic Plate Count	195	MPN	No Limit Set	SM9215E	0	6/23/2022 13:40
Inorganic Compounds						
Chlorine, residual	0	mg/L	4	SM4500CLG-2011	0	6/20/2022 14:03
Metals						
Arsenic	ND	mg/L	0.01	EPA 200.5	0.005	6/24/2022 13:11
Copper	ND	mg/L	1.3	EPA 200.5	0.005	6/24/2022 13:11
Iron	ND	mg/L	0.3	EPA 200.5	0.005	6/24/2022 13:11
Lead	ND	mg/L	0.015	EPA 200.5	0.001	6/24/2022 13:11
Manganese	ND	mg/L	0.05	EPA 200.5	0.005	6/24/2022 13:11
Minerals						
Alkalinity	144	mg/L	No Limit Set	SM 2320B (-97)	5	7/5/2022 17:10
Chloride	8.0	mg/L	250	EPA 300.0	1	6/23/2022 21:42
Hardness	169	mg/L	No Limit Set	EPA 200.5	5	6/24/2022 13:11
Sodium	7.6	mg/L	100	EPA 200.5	1	6/24/2022 13:11
Sulfate	25.5	mg/L	250	EPA 300.0	2	6/23/2022 21:42
Miscellaneous/Other						
Langelier Saturation Index	-0.60 *	LSI	No Limit Set	CALCTN	None	7/6/2022 18:10
Nutrient						
Nitrate as N	1.0	mg/L	10	EPA 300.0	0.5	6/23/2022 21:42
Nitrite as N	ND	mg/L	1	EPA 300.0	0.1	6/23/2022 21:42
Physical						
Color, apparent	<5	CU	15	SM 2120B-01	5	6/21/2022 13:30
Odor	0	TON	2	SM2150B-2011	0	6/23/2022 16:00

Based on the bacteriological examination, according to the Federal Safe Drinking Water Act (SDWA), this water was unsafe for drinking purpose at the time the sample was collected. Corrective measures, followed by re-examination, are recommended.
*Serious corrosion.

ND = Not Detected
* = Above Specified Limit

CT Lic PH-0787 NY Lic 11706

AquaEnvLab.com
YorkLab.com
203 270 9973

Analytical results relate to the samples as received at the laboratory. Report shall not be reproduced except in its entirety without written approval from the laboratory.

AQUA ENVIRONMENTAL LAB
56 Church Hill Road • Newtown, CT 06470 • (203) 270-9973
A York Analytical Company
YORK
ANALYTICAL LABORATORIES INC

Report of Analysis

Name: WSP, USA
4 Research Dr.
Ste. 204
Shelton, CT 06484
Sample Date: 6/20/2022 2:03 PM
Receipt Date: 6/20/2022 2:03 PM
Report Date: 7/11/2022
Sample Site: Summit Well 3

Sample ID#: 288621
Sample Type: Drinking Water
Sampler: WSP

Parameter	Sample Result	Units	Limits	Method	RL	Analysis Date / Time
Physical						
PH	7.6	pH	6.4 - 8.5	SM4500HB-2011	0	6/20/2022 14:03
Total Dissolved Solids (TDS)	246	mg/L	500	SM2540C-2011	None	6/29/2022 12:03
Turbidity	0.30	NTU	5	EPA 180.1	0.05	6/23/2022 16:00
Radiochemicals						
Water Radon(212835)	813 +/-30	pCi/L	No Limit Set	SM7500Rn-23	0	6/23/2022 16:50

Comments: Based on the bacteriological examination, according to the Federal Safe Drinking Water Act (SDWA), this water was unsafe for drinking purpose at the time the sample was collected. Corrective measures, followed by re-examination, are recommended.
*Serious corrosion.

ND = Not Detected
* = Above Specified Limit

Report Approved by: ______________________
Lab Director

CT Lic PH-0787 NY Lic 11706

AquaEnvLab.com
YorkLab.com
203 270 9973

Analytical results relate to the samples as received at the laboratory. Report shall not be reproduced except in its entirety without written approval from the laboratory.

AQUA ENVIRONMENTAL LAB
56 Church Hill Road • Newtown, CT 06470 • (203) 270-9973
A York Analytical Company
YORK
ANALYTICAL LABORATORIES INC

Report of Analysis

Name:	WSP, USA 4 Research Dr. Ste. 204 Shelton, CT 06484	**Sample ID#:**	288622
		Sample Type:	Drinking Water
		Sampler:	WSP
Sample Date:	6/20/2022 2:03 PM		
Receipt Date:	6/20/2022 2:03 PM		
Report Date:	7/27/2022		
Sample Site:	Summit Well 3		

Parameter	Sample Result	Units	Limits	Method	RL	Analysis Date / Time
Metals						
Antimony	ND	mg/L	0.006	EPA 200.5	0.005	6/24/2022 13:11
Arsenic	ND	mg/L	0.01	EPA 200.5	0.005	6/24/2022 13:11
Barium	0.04	mg/L	2	EPA 200.5	0.001	6/24/2022 13:11
Beryllium	ND	mg/L	0.004	EPA 200.5	0.001	6/24/2022 13:11
Cadmium	ND	mg/L	0.005	EPA 200.5	0.001	6/24/2022 13:11
Chromium(T)	ND	mg/L	0.1	EPA 200.5	0.001	6/24/2022 13:11
Cyanide	<0.005	mg/L	0.2	EPA 335.4	0.005	6/24/2022 10:38
Mercury	<0.0002	mg/L	0.002	EPA 245.2	0.0002	6/29/2022 10:36
Nickel	ND	mg/L	0.1	EPA 200.5	0.001	6/24/2022 13:11
Selenium	ND	mg/L	0.05	EPA 200.5	0.005	6/24/2022 13:11
Silver	ND	mg/L	0.1	EPA 200.5	0.002	6/24/2022 13:11
Thallium	ND	mg/L	0.002	EPA 200.8	0.001	6/29/2022 16:21
Zinc	ND	mg/L	5	EPA 200.5	0.005	6/24/2022 13:11
Minerals						
Chloride	8.0	mg/L	250	EPA 300.0	1	6/23/2022 21:42
Fluoride	ND	mg/L	4	EPA 300.0	0.1	6/23/2022 21:42
Sodium	7.6	mg/L	100	EPA 200.5	1	6/24/2022 13:11
Sulfate	25.5	mg/L	250	EPA 300.0	2	6/23/2022 21:42

ND = Not Detected
* = Above Specified Limit

Report Approved by: Thomas J. Braun

Lab Director

CT Lic PH-0787   NY Lic 11706

AquaEnvLab.com
YorkLab.com
203 270 9973

Analytical results relate to the samples as received at the laboratory. Report shall not be reproduced except in its entirety without written approval from the laboratory.

AQUA ENVIRONMENTAL LAB
56 Church Hill Road • Newtown, CT 06470 • (203) 270-9973
A York Analytical Company
YORK
ANALYTICAL LABORATORIES INC

Report of Analysis

Name: WSP, USA
4 Research Dr.
Ste. 204
Shelton, CT 06484
Sample Date: 6/20/2022 2:03 PM
Receipt Date: 6/20/2022 2:03 PM
Report Date: 7/25/2022
Sample Site: Summit Well 3

Sample ID#: 288626
Sample Type: Drinking Water
Sampler: WSP

Parameter	Sample Result	Units	Limits	Method	RL	Analysis Date / Time
Volatile Organic Compounds						
01) Benzene	ND	ug/L	5	EPA 524.2	0.5	6/27/2022 09:11
02) Bromobenzene	ND	ug/L	5	EPA 524.2	0.5	6/27/2022 09:11
03) Bromochloromethane	ND	ug/L	5	EPA 524.2	0.5	6/27/2022 09:11
04) Bromomethane	ND	ug/L	5	EPA 524.2	0.5	6/27/2022 09:11
05) n-Butylbenzene	ND	ug/L	5	EPA 524.2	0.5	6/27/2022 09:11
06) sec-Butylbenzene	ND	ug/L	5	EPA 524.2	0.5	6/27/2022 09:11
07) tert-Butylbenzene	ND	ug/L	5	EPA 524.2	0.5	6/27/2022 09:11
08) Carbon Tetrachloride	ND	ug/L	5	EPA 524.2	0.5	6/27/2022 09:11
09) Chlorobenzene	ND	ug/L	5	EPA 524.2	0.5	6/27/2022 09:11
10) Chloroethane	ND	ug/L	5	EPA 524.2	0.5	6/27/2022 09:11
11) Chloromethane	ND	ug/L	5	EPA 524.2	0.5	6/27/2022 09:11
12) 2-Chlorotoluene	ND	ug/L	5	EPA 524.2	0.5	6/27/2022 09:11
13) 4-Chlorotoluene	ND	ug/L	5	EPA 524.2	0.5	6/27/2022 09:11
14) Dibromomethane	ND	ug/L	5	EPA 524.2	0.5	6/27/2022 09:11
15) 1,2-Dichlorobenzene	ND	ug/L	5	EPA 524.2	0.5	6/27/2022 09:11
16) 1,3-Dichlorobenzene	ND	ug/L	5	EPA 524.2	0.5	6/27/2022 09:11
17) 1,4-Dichlorobenzene	ND	ug/L	5	EPA 524.2	0.5	6/27/2022 09:11
18) Dichlorodifluoromethane	ND	ug/L	5	EPA 524.2	0.5	6/27/2022 09:11
19) 1,1-Dichloroethane	ND	ug/L	5	EPA 524.2	0.5	6/27/2022 09:11
20) 1,2-Dichloroethane	ND	ug/L	5	EPA 524.2	0.5	6/27/2022 09:11
21) 1,1-Dichloroethene	ND	ug/L	5	EPA 524.2	0.5	6/27/2022 09:11
22) cis-1,2,-Dichloroethene	ND	ug/L	5	EPA 524.2	0.5	6/27/2022 09:11
23) trans-1,2-Dichloroethene	ND	ug/L	5	EPA 524.2	0.5	6/27/2022 09:11
24) 1,2-Dichloropropane	ND	ug/L	5	EPA 524.2	0.5	6/27/2022 09:11
25) 1,3-Dichloropropane	ND	ug/L	5	EPA 524.2	0.5	6/27/2022 09:11
26) 2,2-Dichloropropane	ND	ug/L	5	EPA 524.2	0.5	6/27/2022 09:11
27) 1,1-Dichloropropene	ND	ug/L	5	EPA 524.2	0.5	6/27/2022 09:11

ND = Not Detected
* = Above Specified Limit

CT Lic PH-0787   NY Lic 11706

AquaEnvLab.com
YorkLab.com
203 270 9973

Analytical results relate to the samples as received at the laboratory. Report shall not be reproduced except in its entirety without written approval from the laboratory.

Report of Analysis

Name:	WSP, USA 4 Research Dr. Ste. 204 Shelton, CT 06484	**Sample ID#:**	288626
		Sample Type:	Drinking Water
		Sampler:	WSP
Sample Date:	6/20/2022 2:03 PM		
Receipt Date:	6/20/2022 2:03 PM		
Report Date:	7/25/2022		
Sample Site:	Summit Well 3		

Parameter	Sample Result	Units	Limits	Method	RL	Analysis Date / Time
Volatile Organic Compounds						
28] cis- 1,3-Dichloropropene	ND	ug/L	5	EPA 524.2	0.5	6/27/2022 09:11
29] trans-1,3-Dichloropropene	ND	ug/L	5	EPA 524.2	0.5	6/27/2022 09:11
30) Ethylbenzene	ND	ug/L	5	EPA 524.2	0.5	6/27/2022 09:11
31) Isopropylbenzene	ND	ug/L	5	EPA 524.2	0.5	6/27/2022 09:11
32) p-Isopropyltoluene	ND	ug/L	5	EPA 524.2	0.5	6/27/2022 09:11
33) Methylene chloride	ND	ug/L	5	EPA 524.2	0.5	6/27/2022 09:11
34) n-Propylbenzene	ND	ug/L	5	EPA 524.2	0.5	6/27/2022 09:11
35) Styrene	ND	ug/L	5	EPA 524.2	0.5	6/27/2022 09:11
36) 1,1,1,2-Tetrachloroethane	ND	ug/L	5	EPA 524.2	0.5	6/27/2022 09:11
37) 1,1,2,2-Tetrachloroethane	ND	ug/L	5	EPA 524.2	0.5	6/27/2022 09:11
38) Tetrachloroethene	ND	ug/L	5	EPA 524.2	0.5	6/27/2022 09:11
39) Toluene	ND	ug/L	5	EPA 524.2	0.5	6/27/2022 09:11
40) 1,2,3-Trichlorobenzene	ND	ug/L	5	EPA 524.2	0.5	6/27/2022 09:11
41) 1,2,4-Trichlorobenzene	ND	ug/L	5	EPA 524.2	0.5	6/27/2022 09:11
42) 1,1,1-Trichloroethane	ND	ug/L	5	EPA 524.2	0.5	6/27/2022 09:11
43) 1,1,2-Trichloroethane	ND	ug/L	5	EPA 524.2	0.5	6/27/2022 09:11
44) Trichloroethene	ND	ug/L	5	EPA 524.2	0.5	6/27/2022 09:11
45) Trichlorofluoromethane	ND	ug/L	5	EPA 524.2	0.5	6/27/2022 09:11
46) 1,2,3-Trichloropropane	ND	ug/L	5	EPA 524.2	0.5	6/27/2022 09:11
47} 1,2,4-Trimethylbenzene	ND	ug/L	5	EPA 524.2	0.5	6/27/2022 09:11
48) 1,3,5-Trimethylbenzene	ND	ug/L	5	EPA 524.2	0.5	6/27/2022 09:11
49) o-Xylene	ND	ug/L	5	EPA 524.2	0.5	6/27/2022 09:11
50) Hexachlorobutadiene	ND	ug/L	5	EPA 524.2	0.5	6/27/2022 09:11
51) m+p-Xylene	ND	ug/L	5	EPA 524.2	0.5	6/27/2022 09:11
52) Methyl-tertiary-butyl-ether	ND	ug/L	10	EPA 524.2	0.5	6/27/2022 09:11
53) Vinyl chloride	ND	ug/L	2	EPA 524.2	0.5	6/27/2022 09:11

ND = Not Detected
* = Above Specified Limit

Report Approved by: Thomas J. Braun

Lab Director

CT Lic PH-0787 NY Lic 11706

AquaEnvLab.com
YorkLab.com
203 270 9973

Analytical results relate to the samples as received at the laboratory. Report shall not be reproduced except in its entirety without written approval from the laboratory.

AQUA ENVIRONMENTAL LAB
56 Church Hill Road • Newtown, CT 06470 • (203) 270-9973
A York Analytical Company
YORK
ANALYTICAL LABORATORIES INC

Report of Analysis

Name:	WSP, USA 4 Research Dr. Ste. 204 Shelton, CT 06484	**Sample ID#:**	288624
		Sample Type:	Drinking Water
		Sampler:	WSP
Sample Date:	6/20/2022 2:03 PM		
Receipt Date:	6/20/2022 2:03 PM		
Report Date:	7/27/2022		
Sample Site:	Summit Well 3		

Parameter	Sample Result	Units	Limits	Method	RL	Analysis Date / Time
Organic Compounds						
PCB	ND	mg/L	0.5	EPA 508.1	0.0002	6/27/2022 10:55
Synthetic Organic Chemicals P						
Butachlor	ND	mg/L	0	EPA 508.1	0.001	6/27/2022 10:55
Dioxin	ND	ug/L	0	EPA 1613-B	5	7/2/2022 10:55
Endothall	ND	mg/L	0	EPA 548.1	5	6/29/2022 10:55
Metribuzin	ND	mg/L	0	EPA 508.1	0.0005	6/27/2022 10:55
Propachlor	ND	mg/L	0	EPA 508.1	0.001	6/27/2022 10:55
Synthetic Organic Chemicals P						
Dalapon	ND	mg/L	200	EPA 552.2	0.002	6/29/2022 10:55
Synthetic Organic Compounds						
2,4,5-TP	ND	mg/L	50	EPA 555	0.0004	6/29/2022 10:55
2,4-D	ND	mg/L	70	EPA 555	0.0002	6/29/2022 10:55
3-Hydroxycarbofuran	ND	mg/L	No Limit Set	EPA 531.1	0.002	7/8/2022 10:55
Alachlor	ND	mg/L	2	EPA 508.1	0.0004	6/27/2022 10:55
Aldicarb	ND	mg/L	No Limit Set	EPA 531.1	0.001	7/8/2022 10:55
Aldicarb Sulfone	ND	mg/L	No Limit Set	EPA 531.1	0.0017	7/8/2022 10:55
Aldicarb Sulfoxide	ND	mg/L	No Limit Set	EPA 531.1	0.001	7/8/2022 10:55
Aldrin	ND	mg/L	0	EPA 508.1	0.0005	6/27/2022 10:55
Atrazine	ND	ug/L	3	EPA 508.1	0.0002	6/27/2022 10:55
Benzo (A) Pyrene	ND	mg/L	0.2	EPA 525.2	0	7/12/2022 10:55
Carbaryl	ND	mg/L	No Limit Set	EPA 531.1	0.004	7/8/2022 10:55
Carbofuran	ND	mg/L	40	EPA 531.1	0.0019	7/8/2022 10:55
Chlordane	ND	mg/L	2	EPA 508.1	0.0004	6/27/2022 10:55
Di (2-ethylhexyl) adipate	ND	mg/L	400	EPA 525.2	0.001	7/12/2022 10:55
Di (2-ethylhexyl) phthalates	ND	mg/L	6	EPA 525.2	0.001	7/12/2022 10:55
Dibromochloropropane(DBCP)	ND	mg/L	0.2	EPA 504.1	0	6/29/2022 10:55

ND = Not Detected
* = Above Specified Limit

CT Lic PH-0787 NY Lic 11706

AquaEnvLab.com
YorkLab.com
203 270 9973

Analytical results relate to the samples as received at the laboratory. Report shall not be reproduced except in its entirety without written approval from the laboratory.

Report of Analysis

Name: WSP, USA
4 Research Dr.
Ste. 204
Shelton, CT 06484
Sample Date: 6/20/2022 2:03 PM
Receipt Date: 6/20/2022 2:03 PM
Report Date: 7/27/2022
Sample Site: Summit Well 3

Sample ID#: 288624
Sample Type: Drinking Water
Sampler: WSP

Parameter	Sample Result	Units	Limits	Method	RL	Analysis Date / Time
Synthetic Organic Compounds						
Dicamba	ND	mg/L	No Limit Set	EPA 555	0.0008	6/29/2022 10:55
Dieldrin	ND	mg/L	No Limit Set	EPA 508.1	0	6/27/2022 10:55
Dinoseb	ND	mg/L	7	EPA 555	0.0004	6/29/2022 10:55
Diquat	ND	mg/L	0	EPA 549.2	0.0008	6/28/2022 10:55
Endrin	ND	mg/L	2	EPA 508.1	0	6/27/2022 10:55
Ethylene Dibromide(EDB)	ND	mg/L	0.05	EPA 504.1	0	6/29/2022 10:55
Glyphosphate	ND	mg/L	700	EPA 547	0.01	6/28/2022 10:55
Heptachlor	ND	mg/L	0.4	EPA 508.1	0.0001	6/27/2022 10:55
Heptachlor Epoxide	ND	mg/L	No Limit Set	EPA 508.1	0.0002	6/27/2022 10:55
Hexachlorobenzene	ND	mg/L	1	EPA 508.1	0.0002	6/27/2022 10:55
Hexachlorocyclopentadiene	ND	mg/L	50	EPA 508.1	0.0002	6/27/2022 10:55
Lindane	ND	mg/L	0.2	EPA 508.1	0.0002	6/27/2022 10:55
Methomyl	ND	mg/L	0	EPA 531.1	0.004	7/8/2022 10:55
Methoxychlor	ND	mg/L	40	EPA 508.1	0.001	6/27/2022 10:55
Metolachlor	ND	mg/L	No Limit Set	EPA 508.1	0.001	6/27/2022 10:55
Oxamyl (Vydate)	ND	mg/L	200	EPA 531.1	0.004	7/8/2022 10:55
Pentachlorophenol	ND	mg/L	1	EPA 555	0.0001	6/29/2022 10:55
Picloram	ND	mg/L	500	EPA 555	0.0002	6/29/2022 10:55
Simazine	ND	mg/L	4	EPA 508.1	0.0001	6/27/2022 10:55
Toxaphene	ND	mg/L	3	EPA 508.1	0.002	6/27/2022 10:55

ND = Not Detected
* = Above Specified Limit

Report Approved by: Thomas J. Braun
Lab Director

CT Lic PH-0787 NY Lic 11706

AquaEnvLab.com
YorkLab.com
203 270 9973

Analytical results relate to the samples as received at the laboratory. Report shall not be reproduced except in its entirety without written approval from the laboratory.

AQUA ENVIRONMENTAL LAB
56 Church Hill Road • Newtown, CT 06470 • (203) 270-9973
A York Analytical Company
YORK
ANALYTICAL LABORATORIES INC

Report of Analysis

Name: WSP, USA
4 Research Dr.
Ste. 204
Shelton, CT 06484
Sample Date: 6/20/2022 2:03 PM
Receipt Date: 6/20/2022 2:03 PM
Report Date: 7/26/2022
Sample Site: Summit Well 3

Sample ID#: 288627
Sample Type: Drinking Water
Sampler: WSP

Parameter	Sample Result	Units	Limits	Method	RL	Analysis Date / Time
Radiochemicals						
Gross Beta	2.74+/-1.06	pCi/L	No Limit Set	EPA 900.0	None	7/18/2022 08:36
Radium 226	0.129+/-0.222	pCi/L	5	EPA 903.0	1	7/21/2022 14:03
Radium 228	0.468+/-0.305	pCi/L	5	EPA 904.0	1	7/21/2022 11:58
Total Gross Alpha	3.35+/-1.75	pCi/L	No Limit Set	EPA 900.0	3	7/18/2022 08:36
Uranium	1.3	ug/L	30	EPA 200.8	1	6/29/2022 16:21

ND = Not Detected
* = Above Specified Limit

Report Approved by: Thomas J. Braun
Lab Director

CT Lic PH-0787 NY Lic 11706

AquaEnvLab.com
YorkLab.com
203 270 9973

Analytical results relate to the samples as received at the laboratory. Report shall not be reproduced except in its entirety without written approval from the laboratory.

AQUA ENVIRONMENTAL LAB
56 Church Hill Road • Newtown, CT 06470 • (203) 270-9973
A York Analytical Company
YORK
ANALYTICAL LABORATORIES INC

Report of Analysis

Name: WSP, USA
4 Research Dr.
Ste. 204
Shelton, CT 06484

Sample Date: 6/20/2022 2:03 PM
Receipt Date: 6/20/2022 2:03 PM
Report Date: 7/1/2022
Sample Site: Summit Well 3

Sample ID#: 288620
Sample Type: Drinking Water
Sampler: WSP

Parameter	Sample Result	Units	Limits	Method	RL	Analysis Date / Time
Miscellaneous/Other						
Asbestos	ND	MFL	0	EPA 100.2	0.19	6/30/2022 08:19

ND = Not Detected
* = Above Specified Limit

Report Approved by: Thomas J. Braun
Lab Director

CT Lic PH-0787 NY Lic 11706

AquaEnvLab.com
YorkLab.com
203 270 9973

Analytical results relate to the samples as received at the laboratory. Report shall not be reproduced except in its entirety without written approval from the laboratory.

AQUA ENVIRONMENTAL LAB
56 Church Hill Road • Newtown, CT 06470 • (203) 270-9973
A York Analytical Company
YORK
ANALYTICAL LABORATORIES INC

Report of Analysis

Name: WSP, USA
4 Research Dr.
Ste. 204
Shelton, CT 06484
Sample Date: 6/20/2022 2:03 PM
Receipt Date: 6/20/2022 2:03 PM
Report Date: 7/25/2022
Sample Site: Summit Well 3

Sample ID#: 288623
Sample Type: Drinking Water
Sampler: WSP

Parameter	Sample Result	Units	Limits	Method	RL	Analysis Date / Time
Organic Compounds						
Propylene Glycol	1.1	mg/L	No Limit Set	SW8015	1	6/27/2022 14:03

ND = Not Detected
* = Above Specified Limit

Report Approved by: Thomas J. Braun
Lab Director

CT Lic PH-0787 NY Lic 11706

AquaEnvLab.com
YorkLab.com
203 270 9973

Analytical results relate to the samples as received at the laboratory. Report shall not be reproduced except in its entirety without written approval from the laboratory.

AQUA ENVIRONMENTAL LAB
56 Church Hill Road • Newtown, CT 06470 • (203) 270-9973
A York Analytical Company
YORK
ANALYTICAL LABORATORIES INC

Report of Analysis

Name: WSP, USA
4 Research Dr.
Ste. 204
Shelton, CT 06484
Sample Date: 6/20/2022 2:03 PM
Receipt Date: 6/20/2022 2:03 PM
Report Date: 7/6/2022
Sample Site: Summit Well 3

Sample ID#: 288625
Sample Type: Drinking Water
Sampler: WSP

Parameter	Sample Result	Units	Limits	Method	RL	Analysis Date / Time
Organic Compounds						
1,4-Dioxane	ND	ug/L	1	EPA 522	0.2	6/24/2022 07:43
PerFluoroButaneSulfonic Acid	ND	ng/L	No Limit Set	EPA 537	1.34	7/1/2022 11:13
PerFluoroHeptanoic Acid	ND	ng/L	No Limit Set	EPA 537	1.34	7/1/2022 11:13
PerFluoroHexaneSulfonic Acid	1.46	ng/L	49	EPA 537	1.34	7/1/2022 11:13
PerFluoroHexanoic Acid	1.49	ng/L	No Limit Set	EPA 537	1.34	7/1/2022 11:13
PerFluoroNonanoic Acid	ND	ng/L	12	EPA 537	1.34	7/1/2022 11:13
PerFluoroOctaneSulfonic Acid	2.05	ng/L	10	EPA 537	1.34	7/1/2022 11:13
PerFluoroOctanoic Acid	3.35	ng/L	16	EPA 537	1.34	7/1/2022 11:13

ND = Not Detected
* = Above Specified Limit

Report Approved by: Thomas J. Braun
Lab Director

CT Lic PH-0787 NY Lic 11706

AquaEnvLab.com
YorkLab.com
203 270 9973

Analytical results relate to the samples as received at the laboratory. Report shall not be reproduced except in its entirety without written approval from the laboratory.

Technical Report
Perfluoroalkyl Substances (PFAS)

prepared for:

Aqua Environmental Lab
56 Church Hill Road
Newtown CT, 06470
Attention: T. Braun

Report Date: 07/05/2022
Client Project ID: 288625/288617/288673
York Project (SDG) No.: 22F1242

CT Cert. No. PH-0723 New Jersey Cert. No. CT005 and NY037 New York Cert. Nos. 10854 and 12058 PA Cert. No. 68-04440

Report Date: 07/05/2022
Client Project ID: 288625/288617/288673
York Project (SDG) No.: 22F1242

Aqua Environmental Lab
56 Church Hill Road
Newtown CT, 06470
Attention: T. Braun

Purpose and Results

This report contains the analytical data for the sample(s) identified on the attached chain-of-custody received in our laboratory on June 23, 2022 and listed below. The project was identified as your project: **288625/288617/288673**.

The analyses were conducted utilizing appropriate EPA methods as detailed in the data summary tables.

All samples were received in proper condition meeting the customary acceptance requirements for environmental samples except those indicated under the Sample and Analysis Qualifiers section of this report.

All analyses met the method and laboratory standard operating procedure requirements except as indicated by any data flags, the meaning of which are explained in the Sample and Data Qualifiers Relating to This Work Order section of this report and case narrative if applicable.

Please contact Client Services at 203.325.1371 with any questions regarding this report or e-mail clientservices@yorklab.com.

York Sample ID	Client Sample ID	Matrix	Date Collected	Date Received
22F1242-01	288625	Drinking Water	06/23/2022	06/23/2022
22F1242-02	288617	Drinking Water	06/23/2022	06/23/2022
22F1242-03	288673	Drinking Water	06/23/2022	06/23/2022
22F1242-04	288625-PFAS-Field Blank	Drinking Water	06/23/2022	06/23/2022
22F1242-05	288617-PFAS-Field Blank	Drinking Water	06/23/2022	06/23/2022
22F1242-06	288673-PFAS-Field Blank	Drinking Water	06/23/2022	06/23/2022

General Notes for York Project (SDG) No.: 22F1242

1. The RLs and MDLs (Reporting Limit and Method Detection Limit respectively) reported are adjusted for any dilution necessary due to the levels of target and/or non-target analytes and matrix interference. The RL(REPORTING LIMIT) is based upon the lowest standard utilized for the calibration where applicable.
2. Samples are retained for a period of thirty days after submittal of report, unless other arrangements are made.
3. York's liability for the above data is limited to the dollar value paid to York for the referenced project.
4. This report shall not be reproduced without the written approval of York Analytical Laboratories, Inc.
5. All analyses conducted met method or Laboratory SOP requirements. See the Sample and Data Qualifiers Section for further information.
6. It is noted that no analyses reported herein were subcontracted to another laboratory, unless noted in the report.
7. This report reflects results that relate only to the samples submitted on the attached chain-of-custody form(s) received by York.
8. Analyses conducted at York Analytical Laboratories, Inc. Stratford, CT are indicated by NY Cert. No. 10854; those conducted at York Analytical Laboratories, Inc., Richmond Hill, NY are indicated by NY Cert. No. 12058.

Approved By: Cassie L Mosher **Date:** 07/05/2022

Cassie L. Mosher
Laboratory Manager

Sample Information

Client Sample ID: **288625** **York Sample ID:** **22F1242-01**

York Project (SDG) No.	Client Project ID	Matrix	Collection Date/Time	Date Received
22F1242	288625/288617/288673	Drinking Water	June 23, 2022 8:00 am	06/23/2022

1,4-Dioxane by GC/MS/SIM EPA 522

Log-in Notes: **Sample Notes:**

Sample Prepared by Method: EPA 522

CAS No.	Parameter	Result	Flag	Maximum Contaminant Level MCL, ng/L	Units	Reported to LOQ	Reference Method	Date/Time Analyzed	Analyst
123-91-1	1,4-Dioxane	ND		1	ug/L Certifications:	0.200	EPA 522 NELAC-NY10854	06/24/2022 07:43 06/27/2022 15:05	KH
1693-74-9	*** Tetrahydrofuran-d8**	**0.500**		**0**	ug/mL Certifications:		EPA 522	06/24/2022 07:43 06/27/2022 15:05	KH

	Surrogate Recoveries	Result	Acceptance Range
17647-74-4	*Surrogate: 1,4-Dioxane-d8*	*80.0 %*	*70-130*

PFAS, EPA 537.1 List

Well 3

Log-in Notes: **Sample Notes:**

Sample Prepared by Method: EPA 537.1 SPE DVB

CAS No.	Parameter	Result	Flag	Maximum Contaminant Level MCL, ng/L	Units	Reported to LOQ	Reference Method	Date/Time Analyzed	Analyst
375-73-5	* Perfluorobutanesulfonic acid (PFBS)	ND		0	ng/L Certifications:	1.35	EPA 537.1	07/01/2022 11:13 07/05/2022 13:50	WEL
307-24-4	*** Perfluorohexanoic acid (PFHxA)**	**1.49**		**0**	ng/L Certifications:	1.35	EPA 537.1	07/01/2022 11:13 07/05/2022 13:50	WEL
375-85-9	* Perfluoroheptanoic acid (PFHpA)	ND		0	ng/L Certifications:	1.35	EPA 537.1	07/01/2022 11:13 07/05/2022 13:50	WEL
355-46-4	*** Perfluorohexanesulfonic acid (PFHxS)**	**1.46**		**0**	ng/L Certifications:	1.35	EPA 537.1	07/01/2022 11:13 07/05/2022 13:50	WEL
335-67-1	**Perfluorooctanoic acid (PFOA)**	**3.35**		**10**	ng/L Certifications:	1.35	EPA 537.1 NELAC-NY12058	07/01/2022 11:13 07/05/2022 13:50	WEL
1763-23-1	**Perfluorooctanesulfonic acid (PFOS)**	**2.05**		**10**	ng/L Certifications:	1.35	EPA 537.1 NELAC-NY12058	07/01/2022 11:13 07/05/2022 13:50	WEL
375-95-1	* Perfluorononanoic acid (PFNA)	ND		0	ng/L Certifications:	1.35	EPA 537.1	07/01/2022 11:13 07/05/2022 13:50	WEL
335-76-2	* Perfluorodecanoic acid (PFDA)	ND		0	ng/L Certifications:	1.35	EPA 537.1	07/01/2022 11:13 07/05/2022 13:50	WEL
2058-94-8	* Perfluoroundecanoic acid (PFUnA)	ND		0	ng/L Certifications:	1.35	EPA 537.1	07/01/2022 11:13 07/05/2022 13:50	WEL
307-55-1	* Perfluorododecanoic acid (PFDoA)	ND		0	ng/L Certifications:	1.35	EPA 537.1	07/01/2022 11:13 07/05/2022 13:50	WEL
72629-94-8	* Perfluorotridecanoic acid (PFTrDA)	ND		0	ng/L Certifications:	1.35	EPA 537.1	07/01/2022 11:13 07/05/2022 13:50	WEL
376-06-7	* Perfluorotetradecanoic acid (PFTA)	ND		0	ng/L Certifications:	1.35	EPA 537.1	07/01/2022 11:13 07/05/2022 13:50	WEL
2355-31-9	* N-MeFOSAA	ND		0	ng/L Certifications:	1.35	EPA 537.1	07/01/2022 11:13 07/05/2022 13:50	WEL
2991-50-6	* N-EtFOSAA	ND		0	ng/L Certifications:	1.35	EPA 537.1	07/01/2022 11:13 07/05/2022 13:50	WEL

Sample Information

Client Sample ID: 288625 **York Sample ID:** 22F1242-01

York Project (SDG) No.	Client Project ID	Matrix	Collection Date/Time	Date Received
22F1242	288625/288617/288673	Drinking Water	June 23, 2022 8:00 am	06/23/2022

PFAS, EPA 537.1 List

Log-in Notes: **Sample Notes:**

Sample Prepared by Method: EPA 537.1 SPE DVB

CAS No.	Parameter	Result	Flag	Maximum Contaminant Level MCL, ng/L	Units	Reported to LOQ	Reference Method	Date/Time Analyzed	Analyst
756426-58-1	* 9CL-PF3ONS	ND		0	ng/L Certifications:	1.35	EPA 537.1	07/01/2022 11:13 07/05/2022 13:50	WEL
763051-92-9	* 11CL-PF3OUdS	ND		0	ng/L Certifications:	1.35	EPA 537.1	07/01/2022 11:13 07/05/2022 13:50	WEL
13252-13-6	* HFPO-DA (Gen-X)	ND		0	ng/L Certifications:	1.35	EPA 537.1	07/01/2022 11:13 07/05/2022 13:50	WEL
919005-14-4	* ADONA	ND		0	ng/L Certifications:	1.35	EPA 537.1	07/01/2022 11:13 07/05/2022 13:50	WEL

Surrogate Recoveries	Result	Acceptance Range
Surrogate: d5-N-EtFOSAA	*107 %*	*70-130*
Surrogate: 13C-PFDA	*90.5 %*	*70-130*
Surrogate: 13C-PFHxA	*104 %*	*70-130*
Surrogate: M3HFPO-DA	*96.7 %*	*70-130*

Sample Information

Client Sample ID: 288617 **York Sample ID:** 22F1242-02

York Project (SDG) No.	Client Project ID	Matrix	Collection Date/Time	Date Received
22F1242	288625/288617/288673	Drinking Water	June 23, 2022 9:00 am	06/23/2022

1,4-Dioxane by GC/MS/SIM EPA 522

Log-in Notes: **Sample Notes:**

Sample Prepared by Method: EPA 522

CAS No.	Parameter	Result	Flag	Maximum Contaminant Level MCL, ng/L	Units	Reported to LOQ	Reference Method	Date/Time Analyzed	Analyst
123-91-1	1,4-Dioxane	ND		1	ug/L Certifications:	0.200 NELAC-NY10854	EPA 522	06/24/2022 07:43 06/27/2022 15:25	KH
1693-74-9	*** Tetrahydrofuran-d8**	**0.500**		**0**	ug/mL Certifications:		EPA 522	06/24/2022 07:43 06/27/2022 15:25	KH

	Surrogate Recoveries	Result	Acceptance Range
17647-74-4	*Surrogate: 1,4-Dioxane-d8*	*80.0 %*	*70-130*

PFAS, EPA 537.1 List

Well 6A

Log-in Notes: **Sample Notes:**

Sample Prepared by Method: EPA 537.1 SPE DVB

CAS No.	Parameter	Result	Flag	Maximum Contaminant Level MCL, ng/L	Units	Reported to LOQ	Reference Method	Date/Time Analyzed	Analyst
375-73-5	* Perfluorobutanesulfonic acid (PFBS)	ND		0	ng/L Certifications:	1.43	EPA 537.1	07/01/2022 11:13 07/05/2022 14:03	WEL

Sample Information

Client Sample ID: **288617** **York Sample ID:** **22F1242-02**

York Project (SDG) No.	Client Project ID	Matrix	Collection Date/Time	Date Received
22F1242	288625/288617/288673	Drinking Water	June 23, 2022 9:00 am	06/23/2022

PFAS, EPA 537.1 List

Log-in Notes: **Sample Notes:**

Sample Prepared by Method: EPA 537.1 SPE DVB

CAS No.	Parameter	Result	Flag	Maximum Contaminant Level MCL, ng/L	Units	Reported to LOQ	Reference Method	Date/Time Analyzed	Analyst
307-24-4	*** Perfluorohexanoic acid (PFHxA)**	**1.78**		**0**	ng/L Certifications:	1.43	EPA 537.1	07/01/2022 11:13 07/05/2022 14:03	WEL
375-85-9	* Perfluoroheptanoic acid (PFHpA)	ND		0	ng/L Certifications:	1.43	EPA 537.1	07/01/2022 11:13 07/05/2022 14:03	WEL
355-46-4	*** Perfluorohexanesulfonic acid (PFHxS)**	**1.54**		**0**	ng/L Certifications:	1.43	EPA 537.1	07/01/2022 11:13 07/05/2022 14:03	WEL
335-67-1	**Perfluorooctanoic acid (PFOA)**	**3.88**		**10**	ng/L Certifications:	1.43 NELAC-NY12058	EPA 537.1	07/01/2022 11:13 07/05/2022 14:03	WEL
1763-23-1	**Perfluorooctanesulfonic acid (PFOS)**	**2.29**		**10**	ng/L Certifications:	1.43 NELAC-NY12058	EPA 537.1	07/01/2022 11:13 07/05/2022 14:03	WEL
375-95-1	* Perfluorononanoic acid (PFNA)	ND		0	ng/L Certifications:	1.43	EPA 537.1	07/01/2022 11:13 07/05/2022 14:03	WEL
335-76-2	* Perfluorodecanoic acid (PFDA)	ND		0	ng/L Certifications:	1.43	EPA 537.1	07/01/2022 11:13 07/05/2022 14:03	WEL
2058-94-8	* Perfluoroundecanoic acid (PFUnA)	ND		0	ng/L Certifications:	1.43	EPA 537.1	07/01/2022 11:13 07/05/2022 14:03	WEL
307-55-1	* Perfluorododecanoic acid (PFDoA)	ND		0	ng/L Certifications:	1.43	EPA 537.1	07/01/2022 11:13 07/05/2022 14:03	WEL
72629-94-8	* Perfluorotridecanoic acid (PFTrDA)	ND		0	ng/L Certifications:	1.43	EPA 537.1	07/01/2022 11:13 07/05/2022 14:03	WEL
376-06-7	* Perfluorotetradecanoic acid (PFTA)	ND		0	ng/L Certifications:	1.43	EPA 537.1	07/01/2022 11:13 07/05/2022 14:03	WEL
2355-31-9	* N-MeFOSAA	ND		0	ng/L Certifications:	1.43	EPA 537.1	07/01/2022 11:13 07/05/2022 14:03	WEL
2991-50-6	* N-EtFOSAA	ND		0	ng/L Certifications:	1.43	EPA 537.1	07/01/2022 11:13 07/05/2022 14:03	WEL
756426-58-1	* 9CL-PF3ONS	ND		0	ng/L Certifications:	1.43	EPA 537.1	07/01/2022 11:13 07/05/2022 14:03	WEL
763051-92-9	* 11CL-PF3OUdS	ND		0	ng/L Certifications:	1.43	EPA 537.1	07/01/2022 11:13 07/05/2022 14:03	WEL
13252-13-6	* HFPO-DA (Gen-X)	ND		0	ng/L Certifications:	1.43	EPA 537.1	07/01/2022 11:13 07/05/2022 14:03	WEL
919005-14-4	* ADONA	ND		0	ng/L Certifications:	1.43	EPA 537.1	07/01/2022 11:13 07/05/2022 14:03	WEL

Surrogate Recoveries	Result	Acceptance Range
Surrogate: d5-N-EtFOSAA	*102 %*	*70-130*
Surrogate: 13C-PFDA	*96.1 %*	*70-130*
Surrogate: 13C-PFHxA	*109 %*	*70-130*
Surrogate: M3HFPO-DA	*101 %*	*70-130*

Sample Information

Client Sample ID: **288673**

York Sample ID: **22F1242-03**

York Project (SDG) No.	Client Project ID	Matrix	Collection Date/Time	Date Received
22F1242	288625/288617/288673	Drinking Water	June 23, 2022 9:20 am	06/23/2022

1,4-Dioxane by GC/MS/SIM EPA 522

Log-in Notes:

Sample Notes:

Sample Prepared by Method: EPA 522

CAS No.	Parameter	Result	Flag	Maximum Contaminant Level MCL, ng/L	Units	Reported to LOQ	Reference Method	Date/Time Analyzed	Analyst
123-91-1	1,4-Dioxane	ND		1	ug/L Certifications:	0.200 NELAC-NY10854	EPA 522	06/24/2022 07:43 06/27/2022 15:44	KH
1693-74-9	*** Tetrahydrofuran-d8**	**0.500**		**0**	ug/mL Certifications:		EPA 522	06/24/2022 07:43 06/27/2022 15:44	KH

	Surrogate Recoveries	Result	Acceptance Range
17647-74-4	*Surrogate: 1,4-Dioxane-d8*	*80.0 %*	*70-130*

PFAS, EPA 537.1 List

Well 1

Log-in Notes:

Sample Notes:

Sample Prepared by Method: EPA 537.1 SPE DVB

CAS No.	Parameter	Result	Flag	Maximum Contaminant Level MCL, ng/L	Units	Reported to LOQ	Reference Method	Date/Time Analyzed	Analyst
375-73-5	* Perfluorobutanesulfonic acid (PFBS)	ND		0	ng/L Certifications:	1.11	EPA 537.1	07/01/2022 11:13 07/05/2022 14:15	WEL
307-24-4	*** Perfluorohexanoic acid (PFHxA)**	**4.48**		**0**	ng/L Certifications:	1.11	EPA 537.1	07/01/2022 11:13 07/05/2022 14:15	WEL
375-85-9	* Perfluoroheptanoic acid (PFHpA)	ND		0	ng/L Certifications:	1.11	EPA 537.1	07/01/2022 11:13 07/05/2022 14:15	WEL
355-46-4	*** Perfluorohexanesulfonic acid (PFHxS)**	**2.22**		**0**	ng/L Certifications:	1.11	EPA 537.1	07/01/2022 11:13 07/05/2022 14:15	WEL
335-67-1	**Perfluorooctanoic acid (PFOA)**	**4.70**		**10**	ng/L Certifications:	1.11 NELAC-NY12058	EPA 537.1	07/01/2022 11:13 07/05/2022 14:15	WEL
1763-23-1	**Perfluorooctanesulfonic acid (PFOS)**	**4.00**		**10**	ng/L Certifications:	1.11 NELAC-NY12058	EPA 537.1	07/01/2022 11:13 07/05/2022 14:15	WEL
375-95-1	* Perfluorononanoic acid (PFNA)	ND		0	ng/L Certifications:	1.11	EPA 537.1	07/01/2022 11:13 07/05/2022 14:15	WEL
335-76-2	* Perfluorodecanoic acid (PFDA)	ND		0	ng/L Certifications:	1.11	EPA 537.1	07/01/2022 11:13 07/05/2022 14:15	WEL
2058-94-8	* Perfluoroundecanoic acid (PFUnA)	ND		0	ng/L Certifications:	1.11	EPA 537.1	07/01/2022 11:13 07/05/2022 14:15	WEL
307-55-1	* Perfluorododecanoic acid (PFDoA)	ND		0	ng/L Certifications:	1.11	EPA 537.1	07/01/2022 11:13 07/05/2022 14:15	WEL
72629-94-8	* Perfluorotridecanoic acid (PFTrDA)	ND		0	ng/L Certifications:	1.11	EPA 537.1	07/01/2022 11:13 07/05/2022 14:15	WEL
376-06-7	* Perfluorotetradecanoic acid (PFTA)	ND		0	ng/L Certifications:	1.11	EPA 537.1	07/01/2022 11:13 07/05/2022 14:15	WEL
2355-31-9	* N-MeFOSAA	ND		0	ng/L Certifications:	1.11	EPA 537.1	07/01/2022 11:13 07/05/2022 14:15	WEL
2991-50-6	* N-EtFOSAA	ND		0	ng/L Certifications:	1.11	EPA 537.1	07/01/2022 11:13 07/05/2022 14:15	WEL
756426-58-1	* 9CL-PF3ONS	ND		0	ng/L Certifications:	1.11	EPA 537.1	07/01/2022 11:13 07/05/2022 14:15	WEL

Sample Information

Client Sample ID: **288673** | **York Sample ID:** **22F1242-03**

York Project (SDG) No.	Client Project ID	Matrix	Collection Date/Time	Date Received
22F1242	288625/288617/288673	Drinking Water	June 23, 2022 9:20 am	06/23/2022

PFAS, EPA 537.1 List

Log-in Notes:

Sample Notes:

Sample Prepared by Method: EPA 537.1 SPE DVB

CAS No.	Parameter	Result	Flag	Maximum Contaminant Level MCL, ng/L	Units	Reported to LOQ	Reference Method	Date/Time Analyzed	Analyst
763051-92-9	* 11CL-PF3OUdS	ND		0	ng/L Certifications:	1.11	EPA 537.1	07/01/2022 11:13 07/05/2022 14:15	WEL
13252-13-6	* HFPO-DA (Gen-X)	ND		0	ng/L Certifications:	1.11	EPA 537.1	07/01/2022 11:13 07/05/2022 14:15	WEL
919005-14-4	* ADONA	ND		0	ng/L Certifications:	1.11	EPA 537.1	07/01/2022 11:13 07/05/2022 14:15	WEL

Surrogate Recoveries	Result	Acceptance Range
Surrogate: d5-N-EtFOSAA	*96.0 %*	*70-130*
Surrogate: 13C-PFDA	*84.4 %*	*70-130*
Surrogate: 13C-PFHxA	*97.8 %*	*70-130*
Surrogate: M3HFPO-DA	*92.7 %*	*70-130*

Sample Information

Client Sample ID: **288625-PFAS-Field Blank** | **York Sample ID:** **22F1242-04**

York Project (SDG) No.	Client Project ID	Matrix	Collection Date/Time	Date Received
22F1242	288625/288617/288673	Drinking Water	June 23, 2022 8:00 am	06/23/2022

PFAS, EPA 537.1 List

Log-in Notes:

Sample Notes:

Sample Prepared by Method: EPA 537.1 SPE DVB

CAS No.	Parameter	Result	Flag	Maximum Contaminant Level MCL, ng/L	Units	Reported to LOQ	Reference Method	Date/Time Analyzed	Analyst
375-73-5	* Perfluorobutanesulfonic acid (PFBS)	ND		0	ng/L Certifications:	1.52	EPA 537.1	07/01/2022 11:13 07/05/2022 14:27	WEL
307-24-4	* Perfluorohexanoic acid (PFHxA)	ND		0	ng/L Certifications:	1.52	EPA 537.1	07/01/2022 11:13 07/05/2022 14:27	WEL
375-85-9	* Perfluoroheptanoic acid (PFHpA)	ND		0	ng/L Certifications:	1.52	EPA 537.1	07/01/2022 11:13 07/05/2022 14:27	WEL
355-46-4	* Perfluorohexanesulfonic acid (PFHxS)	ND		0	ng/L Certifications:	1.52	EPA 537.1	07/01/2022 11:13 07/05/2022 14:27	WEL
335-67-1	Perfluorooctanoic acid (PFOA)	ND		10	ng/L Certifications: NELAC-NY12058	1.52	EPA 537.1	07/01/2022 11:13 07/05/2022 14:27	WEL
1763-23-1	Perfluorooctanesulfonic acid (PFOS)	ND		10	ng/L Certifications: NELAC-NY12058	1.52	EPA 537.1	07/01/2022 11:13 07/05/2022 14:27	WEL
375-95-1	* Perfluorononanoic acid (PFNA)	ND		0	ng/L Certifications:	1.52	EPA 537.1	07/01/2022 11:13 07/05/2022 14:27	WEL
335-76-2	* Perfluorodecanoic acid (PFDA)	ND		0	ng/L Certifications:	1.52	EPA 537.1	07/01/2022 11:13 07/05/2022 14:27	WEL
2058-94-8	* Perfluoroundecanoic acid (PFUnA)	ND		0	ng/L Certifications:	1.52	EPA 537.1	07/01/2022 11:13 07/05/2022 14:27	WEL

Sample Information

Client Sample ID: **288625-PFAS-Field Blank** **York Sample ID:** **22F1242-04**

York Project (SDG) No.	Client Project ID	Matrix	Collection Date/Time	Date Received
22F1242	288625/288617/288673	Drinking Water	June 23, 2022 8:00 am	06/23/2022

PFAS, EPA 537.1 List **Log-in Notes:** **Sample Notes:**

Sample Prepared by Method: EPA 537.1 SPE DVB

CAS No.	Parameter	Result	Flag	Maximum Contaminant Level MCL, ng/L	Units	Reported to LOQ	Reference Method	Date/Time Analyzed	Analyst
307-55-1	* Perfluorododecanoic acid (PFDoA)	ND		0	ng/L Certifications:	1.52	EPA 537.1	07/01/2022 11:13 07/05/2022 14:27	WEL
72629-94-8	* Perfluorotridecanoic acid (PFTrDA)	ND		0	ng/L Certifications:	1.52	EPA 537.1	07/01/2022 11:13 07/05/2022 14:27	WEL
376-06-7	* Perfluorotetradecanoic acid (PFTA)	ND		0	ng/L Certifications:	1.52	EPA 537.1	07/01/2022 11:13 07/05/2022 14:27	WEL
2355-31-9	* N-MeFOSAA	ND		0	ng/L Certifications:	1.52	EPA 537.1	07/01/2022 11:13 07/05/2022 14:27	WEL
2991-50-6	* N-EtFOSAA	ND		0	ng/L Certifications:	1.52	EPA 537.1	07/01/2022 11:13 07/05/2022 14:27	WEL
756426-58-1	* 9CL-PF3ONS	ND		0	ng/L Certifications:	1.52	EPA 537.1	07/01/2022 11:13 07/05/2022 14:27	WEL
763051-92-9	* 11CL-PF3OUdS	ND		0	ng/L Certifications:	1.52	EPA 537.1	07/01/2022 11:13 07/05/2022 14:27	WEL
13252-13-6	* HFPO-DA (Gen-X)	ND		0	ng/L Certifications:	1.52	EPA 537.1	07/01/2022 11:13 07/05/2022 14:27	WEL
919005-14-4	* ADONA	ND		0	ng/L Certifications:	1.52	EPA 537.1	07/01/2022 11:13 07/05/2022 14:27	WEL

Surrogate Recoveries	Result	Acceptance Range
Surrogate: d5-N-EtFOSAA	*107 %*	*70-130*
Surrogate: 13C-PFDA	*95.5 %*	*70-130*
Surrogate: 13C-PFHxA	*104 %*	*70-130*
Surrogate: M3HFPO-DA	*105 %*	*70-130*

Sample Information

Client Sample ID: **288617-PFAS-Field Blank** **York Sample ID:** **22F1242-05**

York Project (SDG) No.	Client Project ID	Matrix	Collection Date/Time	Date Received
22F1242	288625/288617/288673	Drinking Water	June 23, 2022 9:00 am	06/23/2022

PFAS, EPA 537.1 List **Log-in Notes:** **Sample Notes:**

Sample Prepared by Method: EPA 537.1 SPE DVB

CAS No.	Parameter	Result	Flag	Maximum Contaminant Level MCL, ng/L	Units	Reported to LOQ	Reference Method	Date/Time Analyzed	Analyst
375-73-5	* Perfluorobutanesulfonic acid (PFBS)	ND		0	ng/L Certifications:	1.92	EPA 537.1	07/01/2022 11:13 07/05/2022 15:04	WEL
307-24-4	* Perfluorohexanoic acid (PFHxA)	ND		0	ng/L Certifications:	1.92	EPA 537.1	07/01/2022 11:13 07/05/2022 15:04	WEL
375-85-9	* Perfluoroheptanoic acid (PFHpA)	ND		0	ng/L Certifications:	1.92	EPA 537.1	07/01/2022 11:13 07/05/2022 15:04	WEL

Sample Information

Client Sample ID: **288617-PFAS-Field Blank** **York Sample ID:** **22F1242-05**

York Project (SDG) No.	Client Project ID	Matrix	Collection Date/Time	Date Received
22F1242	288625/288617/288673	Drinking Water	June 23, 2022 9:00 am	06/23/2022

PFAS, EPA 537.1 List **Log-in Notes:** **Sample Notes:**

Sample Prepared by Method: EPA 537.1 SPE DVB

CAS No.	Parameter	Result	Flag	Maximum Contaminant Level MCL, ng/L	Units	Reported to LOQ	Reference Method	Date/Time Analyzed	Analyst
355-46-4	* Perfluorohexanesulfonic acid (PFHxS)	ND		0	ng/L Certifications:	1.92	EPA 537.1	07/01/2022 11:13 07/05/2022 15:04	WEL
335-67-1	Perfluorooctanoic acid (PFOA)	ND		10	ng/L Certifications:	1.92 NELAC-NY12058	EPA 537.1	07/01/2022 11:13 07/05/2022 15:04	WEL
1763-23-1	Perfluorooctanesulfonic acid (PFOS)	ND		10	ng/L Certifications:	1.92 NELAC-NY12058	EPA 537.1	07/01/2022 11:13 07/05/2022 15:04	WEL
375-95-1	* Perfluorononanoic acid (PFNA)	ND		0	ng/L Certifications:	1.92	EPA 537.1	07/01/2022 11:13 07/05/2022 15:04	WEL
335-76-2	* Perfluorodecanoic acid (PFDA)	ND		0	ng/L Certifications:	1.92	EPA 537.1	07/01/2022 11:13 07/05/2022 15:04	WEL
2058-94-8	* Perfluoroundecanoic acid (PFUnA)	ND		0	ng/L Certifications:	1.92	EPA 537.1	07/01/2022 11:13 07/05/2022 15:04	WEL
307-55-1	* Perfluorododecanoic acid (PFDoA)	ND		0	ng/L Certifications:	1.92	EPA 537.1	07/01/2022 11:13 07/05/2022 15:04	WEL
72629-94-8	* Perfluorotridecanoic acid (PFTrDA)	ND		0	ng/L Certifications:	1.92	EPA 537.1	07/01/2022 11:13 07/05/2022 15:04	WEL
376-06-7	* Perfluorotetradecanoic acid (PFTA)	ND		0	ng/L Certifications:	1.92	EPA 537.1	07/01/2022 11:13 07/05/2022 15:04	WEL
2355-31-9	* N-MeFOSAA	ND		0	ng/L Certifications:	1.92	EPA 537.1	07/01/2022 11:13 07/05/2022 15:04	WEL
2991-50-6	* N-EtFOSAA	ND		0	ng/L Certifications:	1.92	EPA 537.1	07/01/2022 11:13 07/05/2022 15:04	WEL
756426-58-1	* 9CL-PF3ONS	ND		0	ng/L Certifications:	1.92	EPA 537.1	07/01/2022 11:13 07/05/2022 15:04	WEL
763051-92-9	* 11CL-PF3OUdS	ND		0	ng/L Certifications:	1.92	EPA 537.1	07/01/2022 11:13 07/05/2022 15:04	WEL
13252-13-6	* HFPO-DA (Gen-X)	ND		0	ng/L Certifications:	1.92	EPA 537.1	07/01/2022 11:13 07/05/2022 15:04	WEL
919005-14-4	* ADONA	ND		0	ng/L Certifications:	1.92	EPA 537.1	07/01/2022 11:13 07/05/2022 15:04	WEL

Surrogate Recoveries	Result	Acceptance Range
Surrogate: d5-N-EtFOSAA	*95.7 %*	*70-130*
Surrogate: 13C-PFDA	*82.6 %*	*70-130*
Surrogate: 13C-PFHxA	*87.4 %*	*70-130*
Surrogate: M3HFPO-DA	*91.1 %*	*70-130*

Sample Information

Client Sample ID: **288673-PFAS-Field Blank** **York Sample ID:** **22F1242-06**

York Project (SDG) No.	Client Project ID	Matrix	Collection Date/Time	Date Received
22F1242	288625/288617/288673	Drinking Water	June 23, 2022 9:20 am	06/23/2022

Sample Information

Client Sample ID: **288673-PFAS-Field Blank** **York Sample ID:** **22F1242-06**

York Project (SDG) No.	Client Project ID	Matrix	Collection Date/Time	Date Received
22F1242	288625/288617/288673	Drinking Water	June 23, 2022 9:20 am	06/23/2022

PFAS, EPA 537.1 List

Log-in Notes: **Sample Notes:**

Sample Prepared by Method: EPA 537.1 SPE DVB

CAS No.	Parameter	Result	Flag	Maximum Contaminant Level MCL, ng/L	Units	Reported to LOQ	Reference Method	Date/Time Analyzed	Analyst
375-73-5	* Perfluorobutanesulfonic acid (PFBS)	ND		0	ng/L Certifications:	2.00	EPA 537.1	07/01/2022 11:13 07/05/2022 15:18	WEL
307-24-4	* Perfluorohexanoic acid (PFHxA)	ND		0	ng/L Certifications:	2.00	EPA 537.1	07/01/2022 11:13 07/05/2022 15:18	WEL
375-85-9	* Perfluoroheptanoic acid (PFHpA)	ND		0	ng/L Certifications:	2.00	EPA 537.1	07/01/2022 11:13 07/05/2022 15:18	WEL
355-46-4	* Perfluorohexanesulfonic acid (PFHxS)	ND		0	ng/L Certifications:	2.00	EPA 537.1	07/01/2022 11:13 07/05/2022 15:18	WEL
335-67-1	Perfluorooctanoic acid (PFOA)	ND		10	ng/L Certifications: NELAC-NY12058	2.00	EPA 537.1	07/01/2022 11:13 07/05/2022 15:18	WEL
1763-23-1	Perfluorooctanesulfonic acid (PFOS)	ND		10	ng/L Certifications: NELAC-NY12058	2.00	EPA 537.1	07/01/2022 11:13 07/05/2022 15:18	WEL
375-95-1	* Perfluorononanoic acid (PFNA)	ND		0	ng/L Certifications:	2.00	EPA 537.1	07/01/2022 11:13 07/05/2022 15:18	WEL
335-76-2	* Perfluorodecanoic acid (PFDA)	ND		0	ng/L Certifications:	2.00	EPA 537.1	07/01/2022 11:13 07/05/2022 15:18	WEL
2058-94-8	* Perfluoroundecanoic acid (PFUnA)	ND		0	ng/L Certifications:	2.00	EPA 537.1	07/01/2022 11:13 07/05/2022 15:18	WEL
307-55-1	* Perfluorododecanoic acid (PFDoA)	ND		0	ng/L Certifications:	2.00	EPA 537.1	07/01/2022 11:13 07/05/2022 15:18	WEL
72629-94-8	* Perfluorotridecanoic acid (PFTrDA)	ND		0	ng/L Certifications:	2.00	EPA 537.1	07/01/2022 11:13 07/05/2022 15:18	WEL
376-06-7	* Perfluorotetradecanoic acid (PFTA)	ND		0	ng/L Certifications:	2.00	EPA 537.1	07/01/2022 11:13 07/05/2022 15:18	WEL
2355-31-9	* N-MeFOSAA	ND		0	ng/L Certifications:	2.00	EPA 537.1	07/01/2022 11:13 07/05/2022 15:18	WEL
2991-50-6	* N-EtFOSAA	ND		0	ng/L Certifications:	2.00	EPA 537.1	07/01/2022 11:13 07/05/2022 15:18	WEL
756426-58-1	* 9CL-PF3ONS	ND		0	ng/L Certifications:	2.00	EPA 537.1	07/01/2022 11:13 07/05/2022 15:18	WEL
763051-92-9	* 11CL-PF3OUdS	ND		0	ng/L Certifications:	2.00	EPA 537.1	07/01/2022 11:13 07/05/2022 15:18	WEL
13252-13-6	* HFPO-DA (Gen-X)	ND		0	ng/L Certifications:	2.00	EPA 537.1	07/01/2022 11:13 07/05/2022 15:18	WEL
919005-14-4	* ADONA	ND		0	ng/L Certifications:	2.00	EPA 537.1	07/01/2022 11:13 07/05/2022 15:18	WEL

Surrogate Recoveries	Result	Acceptance Range
Surrogate: d5-N-EtFOSAA	*96.6 %*	*70-130*
Surrogate: 13C-PFDA	*91.1 %*	*70-130*
Surrogate: 13C-PFHxA	*107 %*	*70-130*
Surrogate: M3HFPO-DA	*113 %*	*70-130*

Analytical Batch Summary

Batch ID: BF21540 **Preparation Method:** EPA 522 **Prepared By:** SJB

YORK Sample ID	Client Sample ID	Preparation Date
22F1242-01	288625	06/24/22
22F1242-02	288617	06/24/22
22F1242-03	288673	06/24/22
BF21540-BLK1	Blank	06/24/22
BF21540-BS1	LCS	06/24/22
BF21540-BS2	LCS	06/24/22
BF21540-DUP1	Duplicate	06/24/22
BF21540-MS1	Matrix Spike	06/24/22

Batch ID: BG20029 **Preparation Method:** EPA 537.1 SPE DVB **Prepared By:** WEL

YORK Sample ID	Client Sample ID	Preparation Date
22F1242-01	288625	07/01/22
22F1242-02	288617	07/01/22
22F1242-03	288673	07/01/22
22F1242-04	288625-PFAS-Field Blank	07/01/22
22F1242-05	288617-PFAS-Field Blank	07/01/22
22F1242-06	288673-PFAS-Field Blank	07/01/22
BG20029-BLK1	Blank	07/01/22
BG20029-BS1	LCS	07/01/22
BG20029-DUP1	Duplicate	07/01/22
BG20029-MS1	Matrix Spike	07/01/22

Semivolatile Organic Compounds by GC/MS/SIM - Quality Control Data

York Analytical Laboratories, Inc.

Analyte	Result	Reporting Limit	Units	Spike Level	Source* Result	%REC	%REC Limits	Flag	RPD	RPD Limit	Flag
Batch BF21540 - EPA 522											
Blank (BF21540-BLK1)							Prepared: 06/24/2022 Analyzed: 06/27/2022				
1,4-Dioxane	ND	0.200	ug/L								
Surrogate: 1,4-Dioxane-d8	*2.80*		*"*	*2.50*		*112*	*70-130*				
LCS (BF21540-BS1)							Prepared: 06/24/2022 Analyzed: 06/27/2022				
1,4-Dioxane	4.66	0.200	ug/L	5.00		93.2	70-130				
Surrogate: 1,4-Dioxane-d8	*2.20*		*"*	*2.50*		*88.0*	*70-130*				
LCS (BF21540-BS2)							Prepared: 06/24/2022 Analyzed: 06/27/2022				
1,4-Dioxane	8.86	0.200	ug/L	10.0		88.6	70-130				
Surrogate: 1,4-Dioxane-d8	*2.20*		*"*	*2.50*		*88.0*	*70-130*				
Duplicate (BF21540-DUP1)	*Source sample: 22F0847-01 (Duplicate)						Prepared: 06/24/2022 Analyzed: 06/27/2022				
1,4-Dioxane	ND	0.200	ug/L		ND					30	
Surrogate: 1,4-Dioxane-d8	*2.60*		*"*	*2.50*		*104*	*70-130*				
Matrix Spike (BF21540-MS1)	*Source sample: 22F0765-01 (Matrix Spike)						Prepared: 06/24/2022 Analyzed: 06/27/2022				
1,4-Dioxane	4.17	0.200	ug/L	5.00	ND	83.4	70-130				
Surrogate: 1,4-Dioxane-d8	*2.40*		*"*	*2.50*		*96.0*	*70-130*				

PFAS Target compounds by LC/MS-MS - Quality Control Data

Batch BG20029 - EPA 537.1 SPE DVB

Blank (BG20029-BLK1) Prepared: 07/01/2022 Analyzed: 07/05/2022

Analyte	Result	Reporting Limit	Units	Spike Level	Source* Result	%REC	%REC Limits	Flag	RPD	RPD Limit	Flag
Perfluorobutanesulfonic acid (PFBS)	ND	2.00	ng/L								
Perfluorohexanoic acid (PFHxA)	ND	2.00	"								
Perfluoroheptanoic acid (PFHpA)	ND	2.00	"								
Perfluorohexanesulfonic acid (PFHxS)	ND	2.00	"								
Perfluorooctanoic acid (PFOA)	ND	2.00	"								
Perfluorooctanesulfonic acid (PFOS)	ND	2.00	"								
Perfluorononanoic acid (PFNA)	ND	2.00	"								
Perfluorodecanoic acid (PFDA)	ND	2.00	"								
Perfluoroundecanoic acid (PFUnA)	ND	2.00	"								
Perfluorododecanoic acid (PFDoA)	ND	2.00	"								
Perfluorotridecanoic acid (PFTrDA)	ND	2.00	"								
Perfluorotetradecanoic acid (PFTA)	ND	2.00	"								
N-MeFOSAA	ND	2.00	"								
N-EtFOSAA	ND	2.00	"								
9CL-PF3ONS	ND	2.00	"								
11CL-PF3OUdS	ND	2.00	"								
HFPO-DA (Gen-X)	ND	2.00	"								
ADONA	ND	2.00	"								
Surrogate: d5-N-EtFOSAA	*287*		*"*	*320*		*89.5*	*70-130*				
Surrogate: 13C-PFDA	*69.4*		*"*	*80.0*		*86.8*	*70-130*				
Surrogate: 13C-PFHxA	*75.8*		*"*	*80.0*		*94.7*	*70-130*				
Surrogate: M3HFPO-DA	*73.2*		*"*	*80.0*		*91.5*	*70-130*				

LCS (BG20029-BS1) Prepared: 07/01/2022 Analyzed: 07/05/2022

Analyte	Result	Reporting Limit	Units	Spike Level	Source* Result	%REC	%REC Limits	Flag	RPD	RPD Limit	Flag
Perfluorobutanesulfonic acid (PFBS)	32.3	2.00	ng/L	35.4		91.1	70-130				
Perfluorohexanoic acid (PFHxA)	34.8	2.00	"	40.0		87.0	70-130				
Perfluoroheptanoic acid (PFHpA)	36.5	2.00	"	40.0		91.2	70-130				
Perfluorohexanesulfonic acid (PFHxS)	35.4	2.00	"	38.0		93.0	70-130				
Perfluorooctanoic acid (PFOA)	37.9	2.00	"	40.0		94.7	70-130				
Perfluorooctanesulfonic acid (PFOS)	37.2	2.00	"	38.4		96.9	70-130				
Perfluorononanoic acid (PFNA)	38.4	2.00	"	40.0		95.9	70-130				
Perfluorodecanoic acid (PFDA)	32.7	2.00	"	40.0		81.7	70-130				
Perfluoroundecanoic acid (PFUnA)	36.4	2.00	"	40.0		91.0	70-130				
Perfluorododecanoic acid (PFDoA)	36.4	2.00	"	40.0		91.1	70-130				
Perfluorotridecanoic acid (PFTrDA)	31.3	2.00	"	40.0		78.2	70-130				
Perfluorotetradecanoic acid (PFTA)	32.5	2.00	"	40.0		81.2	70-130				
N-MeFOSAA	37.4	2.00	"	40.0		93.5	70-130				
N-EtFOSAA	37.5	2.00	"	40.0		93.6	70-130				
9CL-PF3ONS	33.9	2.00	"	37.4		90.6	60-130				
11CL-PF3OUdS	31.1	2.00	"	37.8		82.3	60-130				
HFPO-DA (Gen-X)	33.8	2.00	"	40.0		84.6	60-130				
ADONA	32.7	2.00	"	37.8		86.5	60-130				
Surrogate: d5-N-EtFOSAA	*337*		*"*	*320*		*105*	*70-130*				
Surrogate: 13C-PFDA	*74.7*		*"*	*80.0*		*93.3*	*70-130*				
Surrogate: 13C-PFHxA	*83.2*		*"*	*80.0*		*104*	*70-130*				
Surrogate: M3HFPO-DA	*78.9*		*"*	*80.0*		*98.6*	*70-130*				

PFAS Target compounds by LC/MS-MS - Quality Control Data

York Analytical Laboratories, Inc.

Analyte	Result	Reporting Limit	Units	Spike Level	Source* Result	%REC	%REC Limits	Flag	RPD	RPD Limit	Flag
Batch BG20029 - EPA 537.1 SPE DVB											
Duplicate (BG20029-DUP1)	*Source sample: 22F1242-04 (288625-PFAS-Field Blank)						Prepared: 07/01/2022 Analyzed: 07/05/2022				
Perfluorobutanesulfonic acid (PFBS)	ND	2.17	ng/L		ND					25	
Perfluorohexanoic acid (PFHxA)	ND	2.17	"		ND					25	
Perfluoroheptanoic acid (PFHpA)	ND	2.17	"		ND					25	
Perfluorohexanesulfonic acid (PFHxS)	ND	2.17	"		ND					25	
Perfluorooctanoic acid (PFOA)	ND	2.17	"		ND					25	
Perfluorooctanesulfonic acid (PFOS)	ND	2.17	"		ND					25	
Perfluorononanoic acid (PFNA)	ND	2.17	"		ND					25	
Perfluorodecanoic acid (PFDA)	ND	2.17	"		ND					25	
Perfluoroundecanoic acid (PFUnA)	ND	2.17	"		ND					25	
Perfluorododecanoic acid (PFDoA)	ND	2.17	"		ND					25	
Perfluorotridecanoic acid (PFTrDA)	ND	2.17	"		ND					25	
Perfluorotetradecanoic acid (PFTA)	ND	2.17	"		ND					25	
N-MeFOSAA	ND	2.17	"		ND					25	
N-EtFOSAA	ND	2.17	"		ND					25	
9CL-PF3ONS	ND	2.17	"		ND					25	
11CL-PF3OUdS	ND	2.17	"		ND					25	
HFPO-DA (Gen-X)	ND	2.17	"		ND					25	
ADONA	ND	2.17	"		ND					25	
Surrogate: d5-N-EtFOSAA	*348*		*"*	*348*		*100*	*70-130*				
Surrogate: 13C-PFDA	*77.2*		*"*	*87.0*		*88.8*	*70-130*				
Surrogate: 13C-PFHxA	*87.6*		*"*	*87.0*		*101*	*70-130*				
Surrogate: M3HFPO-DA	*84.0*		*"*	*87.0*		*96.6*	*70-130*				
Matrix Spike (BG20029-MS1)	*Source sample: 22F1306-01 (Matrix Spike)						Prepared: 07/01/2022 Analyzed: 07/05/2022				
Perfluorobutanesulfonic acid (PFBS)	58.9	2.00	ng/L	70.8	ND	83.1	70-130				
Perfluorohexanoic acid (PFHxA)	64.6	2.00	"	80.0	ND	80.7	70-130				
Perfluoroheptanoic acid (PFHpA)	69.6	2.00	"	80.0	ND	87.0	70-130				
Perfluorohexanesulfonic acid (PFHxS)	71.2	2.00	"	76.0	ND	93.7	70-130				
Perfluorooctanoic acid (PFOA)	72.3	2.00	"	80.0	ND	90.4	70-130				
Perfluorooctanesulfonic acid (PFOS)	68.0	2.00	"	76.8	ND	88.6	70-130				
Perfluorononanoic acid (PFNA)	68.4	2.00	"	80.0	ND	85.5	70-130				
Perfluorodecanoic acid (PFDA)	65.0	2.00	"	80.0	ND	81.2	70-130				
Perfluoroundecanoic acid (PFUnA)	67.1	2.00	"	80.0	ND	83.9	70-130				
Perfluorododecanoic acid (PFDoA)	64.8	2.00	"	80.0	ND	81.0	70-130				
Perfluorotridecanoic acid (PFTrDA)	60.5	2.00	"	80.0	ND	75.6	70-130				
Perfluorotetradecanoic acid (PFTA)	63.2	2.00	"	80.0	ND	79.0	70-130				
N-MeFOSAA	73.5	2.00	"	80.0	ND	91.8	70-130				
N-EtFOSAA	69.6	2.00	"	80.0	ND	87.0	70-130				
9CL-PF3ONS	67.2	2.00	"	74.8	ND	89.9	70-130				
11CL-PF3OUdS	59.4	2.00	"	75.6	ND	78.5	70-130				
HFPO-DA (Gen-X)	59.2	2.00	"	80.0	ND	74.0	70-130				
ADONA	60.6	2.00	"	75.6	ND	80.2	50-130				
Surrogate: d5-N-EtFOSAA	*304*		*"*	*320*		*94.9*	*70-130*				
Surrogate: 13C-PFDA	*70.4*		*"*	*80.0*		*88.0*	*70-130*				
Surrogate: 13C-PFHxA	*77.0*		*"*	*80.0*		*96.2*	*70-130*				
Surrogate: M3HFPO-DA	*72.0*		*"*	*80.0*		*90.0*	*70-130*				

Sample and Data Qualifiers Relating to This Work Order

Definitions and Other Explanations

*	Analyte is not certified or the state of the samples origination does not offer certification for the Analyte.
ND	NOT DETECTED - the analyte is not detected at the Reported to level (LOQ/RL or LOD/MDL)
RL	REPORTING LIMIT - the minimum reportable value based upon the lowest point in the analyte calibration curve.
LOQ	LIMIT OF QUANTITATION - the minimum concentration of a target analyte that can be reported within a specified degree of confidence. This is the lowest point in an analyte calibration curve that has been subjected to all steps of the processing/analysis and verified to meet defined criteria. This is based upon NELAC 2009 Standards and applies to all analyses.
LOD	LIMIT OF DETECTION - a verified estimate of the minimum concentration of a substance in a given matrix that an analytical process can reliably detect. This is based upon NELAC 2009 Standards and applies to all analyses conducted under the auspices of EPA SW-846.
MDL	METHOD DETECTION LIMIT - a statistically derived estimate of the minimum amount of a substance an analytical system can reliably detect with a 99% confidence that the concentration of the substance is greater than zero. This is based upon 40 CFR Part 136 Appendix B and applies only to EPA 600 and 200 series methods.
Reported to	This indicates that the data for a particular analysis is reported to either the LOD/MDL, or the LOQ/RL. In cases where the "Reported to" is located above the LOD/MDL, any value between this and the LOQ represents an estimated value which is "J" flagged accordingly. This applies to volatile and semi-volatile target compounds only.
NR	Not reported
RPD	Relative Percent Difference
Wet	The data has been reported on an as-received (wet weight) basis
Low Bias	Low Bias flag indicates that the recovery of the flagged analyte is below the laboratory or regulatory lower control limit. The data user should take note that this analyte may be biased low but should evaluate multiple lines of evidence including the LCS and site-specific MS/MSD data to draw bias conclusions. In cases where no site-specific MS/MSD was requested, only the LCS data can be used to evaluate such bias.
High Bias	High Bias flag indicates that the recovery of the flagged analyte is above the laboratory or regulatory upper control limit. The data user should take note that this analyte may be biased high but should evaluate multiple lines of evidence including the LCS and site-specific MS/MSD data to draw bias conclusions. In cases where no site-specific MS/MSD was requested, only the LCS data can be used to evaluate such bias.
Non-Dir.	Non-dir. flag (Non-Directional Bias) indicates that the Relative Percent Difference (RPD) (a measure of precision) among the MS and MSD data is outside the laboratory or regulatory control limit. This alerts the data user where the MS and MSD are from site-specific samples that the RPD is high due to either non-homogeneous distribution of target analyte between the MS/MSD or indicates poor reproducibility for other reasons.
MCL	This is the Maximum Contaminant Level in ng/L (ppt) establised by the NYSDOH for these compounds wheree an MCL is reported. Exceedences are flagged according.

YORK
ANALYTICAL LABORATORIES INC

Field Chain-of-Custody Record

York Analytical Laboratories, Inc. (YORK)'s Standard Terms & Conditions are listed on the back side of this document.
This document serves as your written authorization for YORK to proceed with the analyses requested below.
Your signature binds you to YORK's Standard Terms & Conditions.

YORK Project No. 22F1242

120 Research Drive Stratford, CT 06615 | 132-02 89th Ave Queens, NY 11418 | clientservices@yorklab.com | www.yorklab.com | 800-306-YORK | 800-306-9675

Page ______ of ______

YOUR Information	Report To:	Invoice To:
Company:	Company: Agua Environmental Lab	Company:
Address:	Address:	Address:
Phone.:	Phone.:	Phone.:
Contact:	Contact:	Contact:
E-mail:	E-mail:	E-mail:

YOUR Project Number

YOUR Project Name

YOUR PO#:

Turn-Around Time

- RUSH - Next Day ☐
- RUSH - Two Day ☐
- RUSH - Three Day ☐
- RUSH - Four Day ☐
- **Standard (5-7 Day)** ☐

Please print clearly and legibly. All information must be complete. Samples will not be logged in and the turn-around-time clock will not begin until any questions by YORK are resolved.

Samples Collected by: (print AND sign your name)

Matrix Codes

- S - soil / solid
- GW - groundwater
- [✓ DW - drinking water]
- WW - wastewater
- O - Oil | Other

Samples From

- New York ☑
- New Jersey ☐
- Connecticut ☐
- Pennsylvania ☐
- Other:

Report / EDD Type (circle selections)

Summary Report	CT RCP	Standard Excel EDD
QA Report	CT RCP DQA/DUE	EQuIS (Standard)
NY ASP A Package	NJDEP Reduced Deliverables	NYSDEC EQuIS
NY ASP B Package		NJDEP SRP HazSite
	NJDKQP	Other:

YORK Reg. Comp.
Compared to the following Regulation(s): (please fill in)

Sample Identification	Sample Matrix	Date/Time Sampled	Analysis Requested	Container Description
288625	DW	6/23/22 8:00 am	PFAS Method 537 18 Compound &	1,4 Dioxane
288617	DW	6/23/22 9:00 am	PFAS Method 537 18 Compound &	1,4 Dioxane
288623	DW	6/23/22 9:20 am	PFAs Method 537 18 Compound +	1,4 Dioxane

Comments:

Samples iced/chilled at time of lab pickup? circle Yes or No

Preservation: (check all that apply)
HCl ____ MeOH ____ HNO3 ____ H2SO4 ____ NaOH ____
ZnAc ____ Ascorbic Acid ____ Other: ______________

Special Instruction
Field Filtered ☐
Lab to Filter ☐

Samples Relinquished by / Company	Date/Time 6/23/22 12:55pm	1. Samples Received by / Company	Date/Time	2. Samples Relinquished by / Company S Beeman	Date/Time 6/23 13:55
Samples Received by / Company	Date/Time	3. Samples Relinquished by / Company	Date/Time	3. Samples Received by / Company	Date/Time
Samples Relinquished by / Company	Date/Time	4. Samples Received by / Company	Date/Time	Samples Received in LAB by	Date/Time 6/23/22 1315

Temperature 1.0 Degrees C

WELL 6A

AQUA ENVIRONMENTAL LAB
56 Church Hill Road • Newtown, CT 06470 • (203) 270-9973
A York Analytical Company
YORK
ANALYTICAL LABORATORIES INC

Report of Analysis

Name: WSP, USA
4 Research Dr.
Ste. 204
Shelton, CT 06484
Sample Date: 6/20/2022 2:03 PM
Receipt Date: 6/20/2022 2:03 PM
Report Date: 7/11/2022
Sample Site: Summit Well 6A

Sample ID#: 288613
Sample Type: Drinking Water
Sampler: WSP

Parameter	Sample Result	Units	Limits	Method	RL	Analysis Date / Time
Biological						
Coliform Bacteria	present *	none	0	SM9223B-04	0	6/23/2022 16:30
e Coli Bacteria	absent	none	0	SM9223B-04	0	6/23/2022 16:30
Heterotrophic Plate Count	53	MPN	No Limit Set	SM9215E	0	6/23/2022 13:40
Inorganic Compounds						
Chlorine, residual	0	mg/L	4	SM4500CLG-2011	0	6/20/2022 14:03
Metals						
Arsenic	ND	mg/L	0.01	EPA 200.5	0.005	6/24/2022 13:11
Copper	ND	mg/L	1.3	EPA 200.5	0.005	6/24/2022 13:11
Iron	0.02	mg/L	0.3	EPA 200.5	0.005	6/24/2022 13:11
Lead	ND	mg/L	0.015	EPA 200.5	0.001	6/24/2022 13:11
Manganese	0.05	mg/L	0.05	EPA 200.5	0.005	6/24/2022 13:11
Minerals						
Alkalinity	138	mg/L	No Limit Set	SM 2320B (-97)	5	7/5/2022 17:10
Chloride	12.6	mg/L	250	EPA 300.0	1	6/23/2022 20:32
Hardness	151	mg/L	No Limit Set	EPA 200.5	5	6/24/2022 13:11
Sodium	16.7	mg/L	100	EPA 200.5	1	6/24/2022 13:11
Sulfate	30.7	mg/L	250	EPA 300.0	2	6/23/2022 20:32
Miscellaneous/Other						
Langelier Saturation Index	-0.56 *	LSI	No Limit Set	CALCTN	None	7/6/2022 18:09
Nutrient						
Nitrate as N	ND	mg/L	10	EPA 300.0	0.5	6/23/2022 20:32
Nitrite as N	ND	mg/L	1	EPA 300.0	0.1	6/23/2022 20:32
Physical						
Color, apparent	<5	CU	15	SM 2120B-01	5	6/21/2022 13:30
Odor	2	TON	2	SM2150B-2011	0	6/23/2022 16:00

Based on the bacteriological examination, according to the Federal Safe Drinking Water Act (SDWA), this water was unsafe for drinking purpose at the time the sample was collected. Corrective measures, followed by re-examination, are recommended.
*Serious corrosion.

ND = Not Detected
* = Above Specified Limit

CT Lic PH-0787   NY Lic 11706

AquaEnvLab.com
YorkLab.com
203 270 9973

AQUA ENVIRONMENTAL LAB
56 Church Hill Road • Newtown, CT 06470 • (203) 270-9973
A York Analytical Company
YORK
ANALYTICAL LABORATORIES INC

Report of Analysis

Name: WSP, USA
4 Research Dr.
Ste. 204
Shelton, CT 06484
Sample Date: 6/20/2022 2:03 PM
Receipt Date: 6/20/2022 2:03 PM
Report Date: 7/11/2022
Sample Site: Summit Well 6A

Sample ID#: 288613
Sample Type: Drinking Water
Sampler: WSP

Parameter	Sample Result	Units	Limits	Method	RL	Analysis Date / Time
Physical						
PH	7.6	pH	6.4 - 8.5	SM4500HB-2011	0	6/20/2022 14:03
Total Dissolved Solids (TDS)	254	mg/L	500	SM2540C-2011	None	6/29/2022 12:02
Turbidity	0.17	NTU	5	EPA 180.1	0.05	6/23/2022 16:00
Radiochemicals						
Water Radon	1,340 +/-38	pCi/L	No Limit Set	SM7500Rn-23	0	6/23/2022 16:50

Comments: Based on the bacteriological examination, according to the Federal Safe Drinking Water Act (SDWA), this water was unsafe for drinking purpose at the time the sample was collected. Corrective measures, followed by re-examination, are recommended.
*Serious corrosion.

ND = Not Detected
* = Above Specified Limit

Report Approved by: Thomas J. Braun
Lab Director

CT Lic PH-0787 NY Lic 11706

AquaEnvLab.com
YorkLab.com
203 270 9973

AQUA ENVIRONMENTAL LAB
56 Church Hill Road • Newtown, CT 06470 • (203) 270-9973
A York Analytical Company
YORK
ANALYTICAL LABORATORIES INC

Report of Analysis

Name:	WSP, USA 4 Research Dr. Ste. 204 Shelton, CT 06484	**Sample ID#:**	288614
		Sample Type:	Drinking Water
		Sampler:	WSP
Sample Date:	6/20/2022 2:03 PM		
Receipt Date:	6/20/2022 2:03 PM		
Report Date:	7/27/2022		
Sample Site:	Summit Well 6A		

Parameter	Sample Result	Units	Limits	Method	RL	Analysis Date / Time
Metals						
Antimony	ND	mg/L	No Limit Set	EPA 200.8	0.001	6/29/2022 16:21
Arsenic	ND	mg/L	0.01	EPA 200.5	0.005	6/24/2022 13:11
Barium	0.007	mg/L	2	EPA 200.5	0.001	6/24/2022 13:11
Beryllium	ND	mg/L	0.004	EPA 200.5	0.001	6/24/2022 13:11
Cadmium	ND	mg/L	0.005	EPA 200.5	0.001	6/24/2022 13:11
Chromium(T)	ND	mg/L	0.1	EPA 200.5	0.001	6/24/2022 13:11
Cyanide	<0.005	mg/L	0.2	EPA 335.4	0.005	6/24/2022 10:38
Mercury	<0.0002	mg/L	0.002	EPA 245.2	0.0002	6/29/2022 10:35
Nickel	ND	mg/L	0.1	EPA 200.5	0.001	6/24/2022 13:11
Selenium	ND	mg/L	0.05	EPA 200.5	0.005	6/24/2022 13:11
Silver	ND	mg/L	0.1	EPA 200.5	0.002	6/24/2022 13:11
Thallium	ND	mg/L	0.002	EPA 200.8	0.001	6/29/2022 16:21
Zinc	ND	mg/L	5	EPA 200.5	0.005	6/24/2022 13:11
Minerals						
Chloride	12.6	mg/L	250	EPA 300.0	1	6/23/2022 20:32
Fluoride	ND	mg/L	4	EPA 300.0	0.1	6/23/2022 20:32
Sodium	16.7	mg/L	100	EPA 200.5	1	6/24/2022 13:11
Sulfate	30.7	mg/L	250	EPA 300.0	2	6/23/2022 20:32

ND = Not Detected
* = Above Specified Limit

Report Approved by: Thomas J. Braun

Lab Director

CT Lic PH-0787 NY Lic 11706

AquaEnvLab.com
YorkLab.com
203 270 9973

AQUA ENVIRONMENTAL LAB
56 Church Hill Road • Newtown, CT 06470 • (203) 270-9973
A York Analytical Company
YORK ANALYTICAL LABORATORIES INC

Report of Analysis

Name: WSP, USA
4 Research Dr.
Ste. 204
Shelton, CT 06484
Sample Date: 6/20/2022 2:03 PM
Receipt Date: 6/20/2022 2:03 PM
Report Date: 7/25/2022
Sample Site: Summit Well 6A

Sample ID#: 288618
Sample Type: Drinking Water
Sampler: WSP

Parameter	Sample Result	Units	Limits	Method	RL	Analysis Date / Time
Volatile Organic Compounds						
01) Benzene	ND	ug/L	5	EPA 524.2	0.5	6/27/2022 20:44
02) Bromobenzene	ND	ug/L	5	EPA 524.2	0.5	6/27/2022 20:44
03) Bromochloromethane	ND	ug/L	5	EPA 524.2	0.5	6/27/2022 20:44
04) Bromomethane	ND	ug/L	5	EPA 524.2	0.5	6/27/2022 20:44
05) n-Butylbenzene	ND	ug/L	5	EPA 524.2	0.5	6/27/2022 20:44
06) sec-Butylbenzene	ND	ug/L	5	EPA 524.2	0.5	6/27/2022 20:44
07) tert-Butylbenzene	ND	ug/L	5	EPA 524.2	0.5	6/27/2022 20:44
08) Carbon Tetrachloride	ND	ug/L	5	EPA 524.2	0.5	6/27/2022 20:44
09) Chlorobenzene	ND	ug/L	5	EPA 524.2	0.5	6/27/2022 20:44
10) Chloroethane	ND	ug/L	5	EPA 524.2	0.5	6/27/2022 20:44
11) Chloromethane	ND	ug/L	5	EPA 524.2	0.5	6/27/2022 20:44
12) 2-Chlorotoluene	ND	ug/L	5	EPA 524.2	0.5	6/27/2022 20:44
13) 4-Chlorotoluene	ND	ug/L	5	EPA 524.2	0.5	6/27/2022 20:44
14) Dibromomethane	ND	ug/L	5	EPA 524.2	0.5	6/27/2022 20:44
15) 1,2-Dichlorobenzene	ND	ug/L	5	EPA 524.2	0.5	6/27/2022 20:44
16) 1,3-Dichlorobenzene	ND	ug/L	5	EPA 524.2	0.5	6/27/2022 20:44
17) 1,4-Dichlorobenzene	ND	ug/L	5	EPA 524.2	0.5	6/27/2022 20:44
18) Dichlorodifluoromethane	ND	ug/L	5	EPA 524.2	0.5	6/27/2022 20:44
19) 1,1-Dichloroethane	ND	ug/L	5	EPA 524.2	0.5	6/27/2022 20:44
20) 1,2-Dichloroethane	ND	ug/L	5	EPA 524.2	0.5	6/27/2022 20:44
21) 1,1-Dichloroethene	ND	ug/L	5	EPA 524.2	0.5	6/27/2022 20:44
22) cis-1,2,-Dichloroethene	ND	ug/L	5	EPA 524.2	0.5	6/27/2022 20:44
23) trans-1,2-Dichloroethene	ND	ug/L	5	EPA 524.2	0.5	6/27/2022 20:44
24) 1,2-Dichloropropane	ND	ug/L	5	EPA 524.2	0.5	6/27/2022 20:44
25) 1,3-Dichloropropane	ND	ug/L	5	EPA 524.2	0.5	6/27/2022 20:44
26) 2,2-Dichloropropane	ND	ug/L	5	EPA 524.2	0.5	6/27/2022 20:44
27) 1,1-Dichloropropene	ND	ug/L	5	EPA 524.2	0.5	6/27/2022 20:44

ND = Not Detected
* = Above Specified Limit

Thomas J. Braun

CT Lic PH-0787   NY Lic 11706

AquaEnvLab.com
YorkLab.com
203 270 9973

Report of Analysis

Name: WSP, USA
4 Research Dr.
Ste. 204
Shelton, CT 06484
Sample Date: 6/20/2022 2:03 PM
Receipt Date: 6/20/2022 2:03 PM
Report Date: 7/25/2022
Sample Site: Summit Well 6A

Sample ID#: 288618
Sample Type: Drinking Water
Sampler: WSP

Parameter	Sample Result	Units	Limits	Method	RL	Analysis Date / Time
Volatile Organic Compounds						
28] cis- 1,3-Dichloropropene	ND	ug/L	5	EPA 524.2	0.5	6/27/2022 20:44
29] trans-1,3-Dichloropropene	ND	ug/L	5	EPA 524.2	0.5	6/27/2022 20:44
30) Ethylbenzene	ND	ug/L	5	EPA 524.2	0.5	6/27/2022 20:44
31) Isopropylbenzene	ND	ug/L	5	EPA 524.2	0.5	6/27/2022 20:44
32) p-Isopropyltoluene	ND	ug/L	5	EPA 524.2	0.5	6/27/2022 20:44
33) Methylene chloride	ND	ug/L	5	EPA 524.2	0.5	6/27/2022 20:44
34) n-Propylbenzene	ND	ug/L	5	EPA 524.2	0.5	6/27/2022 20:44
35) Styrene	ND	ug/L	5	EPA 524.2	0.5	6/27/2022 20:44
36) 1,1,1,2-Tetrachloroethane	ND	ug/L	5	EPA 524.2	0.5	6/27/2022 20:44
37) 1,1,2,2-Tetrachloroethane	ND	ug/L	5	EPA 524.2	0.5	6/27/2022 20:44
38) Tetrachloroethene	ND	ug/L	5	EPA 524.2	0.5	6/27/2022 20:44
39) Toluene	ND	ug/L	5	EPA 524.2	0.5	6/27/2022 20:44
40) 1,2,3-Trichlorobenzene	ND	ug/L	5	EPA 524.2	0.5	6/27/2022 20:44
41) 1,2,4-Trichlorobenzene	ND	ug/L	5	EPA 524.2	0.5	6/27/2022 20:44
42) 1,1,1-Trichloroethane	ND	ug/L	5	EPA 524.2	0.5	6/27/2022 20:44
43) 1,1,2-Trichloroethane	ND	ug/L	5	EPA 524.2	0.5	6/27/2022 20:44
44) Trichloroethene	ND	ug/L	5	EPA 524.2	0.5	6/27/2022 20:44
45) Trichlorofluoromethane	ND	ug/L	5	EPA 524.2	0.5	6/27/2022 20:44
46) 1,2,3-Trichloropropane	ND	ug/L	5	EPA 524.2	0.5	6/27/2022 20:44
47} 1,2,4-Trimethylbenzene	ND	ug/L	5	EPA 524.2	0.5	6/27/2022 20:44
48) 1,3,5-Trimethylbenzene	ND	ug/L	5	EPA 524.2	0.5	6/27/2022 20:44
49) o-Xylene	ND	ug/L	5	EPA 524.2	0.5	6/27/2022 20:44
50) Hexachlorobutadiene	ND	ug/L	5	EPA 524.2	0.5	6/27/2022 20:44
51) m+p-Xylene	ND	ug/L	5	EPA 524.2	0.5	6/27/2022 20:44
52) Methyl-tertiary-butyl-ether	ND	ug/L	10	EPA 524.2	0.5	6/27/2022 20:44
53) Vinyl chloride	ND	ug/L	2	EPA 524.2	0.5	6/27/2022 20:44

ND = Not Detected
* = Above Specified Limit

Report Approved by: Thomas J. Braun
Lab Director

CT Lic PH-0787 NY Lic 11706

AquaEnvLab.com
YorkLab.com
203 270 9973

AQUA ENVIRONMENTAL LAB
56 Church Hill Road • Newtown, CT 06470 • (203) 270-9973
A York Analytical Company
YORK
ANALYTICAL LABORATORIES INC

Report of Analysis

Name: WSP, USA
4 Research Dr.
Ste. 204
Shelton, CT 06484
Sample Date: 6/20/2022 2:03 PM
Receipt Date: 6/20/2022 2:03 PM
Report Date: 7/27/2022
Sample Site: Summit Well 6A

Sample ID#: 288616
Sample Type: Drinking Water
Sampler: WSP

Parameter	Sample Result	Units	Limits	Method	RL	Analysis Date / Time
Organic Compounds						
PCB	ND	mg/L	0.5	EPA 508.1	0.0002	6/27/2022 10:50
Synthetic Organic Chemicals P						
Butachlor	ND	mg/L	0	EPA 508.1	0.001	6/27/2022 10:50
Dioxin	ND	ug/L	0	EPA 1613-B	5	7/2/2022 10:50
Endothall	ND	mg/L	0	EPA 548.1	5	6/29/2022 10:50
Metribuzin	ND	mg/L	0	EPA 508.1	0.0005	6/27/2022 10:50
Propachlor	ND	mg/L	0	EPA 508.1	0.001	6/27/2022 10:50
Synthetic Organic Chemicals P						
Dalapon	ND	mg/L	200	EPA 552.2	0.002	6/29/2022 10:50
Synthetic Organic Compounds						
2,4,5-TP	ND	mg/L	50	EPA 555	0.0004	6/29/2022 10:50
2,4-D	ND	mg/L	70	EPA 555	0.0002	6/29/2022 10:50
3-Hydroxycarbofuran	ND	mg/L	No Limit Set	EPA 531.1	0.002	7/3/2022 10:50
Alachlor	ND	mg/L	2	EPA 508.1	0.0004	6/27/2022 10:50
Aldicarb	ND	mg/L	No Limit Set	EPA 531.1	0.001	7/3/2022 10:50
Aldicarb Sulfone	ND	mg/L	No Limit Set	EPA 531.1	0.0017	7/3/2022 10:50
Aldicarb Sulfoxide	ND	mg/L	No Limit Set	EPA 531.1	0.001	7/3/2022 10:50
Aldrin	ND	mg/L	0	EPA 508.1	0.0005	6/27/2022 10:50
Atrazine	ND	ug/L	3	EPA 508.1	0.0002	6/27/2022 10:50
Benzo (A) Pyrene	ND	mg/L	0.2	EPA 525.2	0	7/12/2022 10:50
Carbaryl	ND	mg/L	No Limit Set	EPA 531.1	0.004	7/3/2022 10:50
Carbofuran	ND	mg/L	40	EPA 531.1	0.0019	7/3/2022 10:50
Chlordane	ND	mg/L	2	EPA 508.1	0.0004	6/27/2022 10:50
Di (2-ethylhexyl) adipate	ND	mg/L	400	EPA 525.2	0.001	7/12/2022 10:50
Di (2-ethylhexyl) phthalates	ND	mg/L	6	EPA 525.2	0.001	7/12/2022 10:50
Dibromochloropropane(DBCP)	ND	mg/L	0.2	EPA 504.1	0	6/29/2022 10:50

ND = Not Detected
* = Above Specified Limit

CT Lic PH-0787 NY Lic 11706

AquaEnvLab.com
YorkLab.com
203 270 9973

Analytical results relate to the samples as received at the laboratory. Report shall not be reproduced except in its entirety without written approval from the laboratory.

Report of Analysis

Name:	WSP, USA 4 Research Dr. Ste. 204 Shelton, CT 06484	**Sample ID#:**	288616
		Sample Type:	Drinking Water
		Sampler:	WSP
Sample Date:	6/20/2022 2:03 PM		
Receipt Date:	6/20/2022 2:03 PM		
Report Date:	7/27/2022		
Sample Site:	Summit Well 6A		

Parameter	Sample Result	Units	Limits	Method	RL	Analysis Date / Time
Synthetic Organic Compounds						
Dicamba	ND	mg/L	No Limit Set	EPA 555	0.0008	6/29/2022 10:50
Dieldrin	ND	mg/L	No Limit Set	EPA 508.1	0	6/27/2022 10:50
Dinoseb	ND	mg/L	7	EPA 555	0.0004	6/29/2022 10:50
Diquat	ND	mg/L	0	EPA 549.2	0.0008	6/28/2022 10:50
Endrin	ND	mg/L	2	EPA 508.1	0	6/27/2022 10:50
Ethylene Dibromide(EDB)	ND	mg/L	0.05	EPA 504.1	0	6/29/2022 10:50
Glyphosphate	ND	mg/L	700	EPA 547	0.01	6/28/2022 10:50
Heptachlor	ND	mg/L	0.4	EPA 508.1	0.0001	6/27/2022 10:50
Heptachlor Epoxide	ND	mg/L	No Limit Set	EPA 508.1	0.0002	6/27/2022 10:50
Hexachlorobenzene	ND	mg/L	1	EPA 508.1	0.0002	6/27/2022 10:50
Hexachlorocyclopentadiene	ND	mg/L	50	EPA 508.1	0.0002	6/27/2022 10:50
Lindane	ND	mg/L	0.2	EPA 508.1	0.0002	6/27/2022 10:50
Methomyl	ND	mg/L	0	EPA 531.1	0.004	7/3/2022 10:50
Methoxychlor	ND	mg/L	40	EPA 508.1	0.001	6/27/2022 10:50
Metolachlor	ND	mg/L	No Limit Set	EPA 508.1	0.001	6/27/2022 10:50
Oxamyl (Vydate)	ND	mg/L	200	EPA 531.1	0.004	7/3/2022 10:50
Pentachlorophenol	ND	mg/L	1	EPA 555	0.0001	6/29/2022 10:50
Picloram	ND	mg/L	500	EPA 555	0.0002	6/29/2022 10:50
Simazine	ND	mg/L	4	EPA 508.1	0.0001	6/27/2022 10:50
Toxaphene	ND	mg/L	3	EPA 508.1	0.002	6/27/2022 10:50

ND = Not Detected
* = Above Specified Limit

Report Approved by: Thomas J. Braun

Lab Director

CT Lic PH-0787 NY Lic 11706

AquaEnvLab.com
YorkLab.com
203 270 9973

Analytical results relate to the samples as received at the laboratory. Report shall not be reproduced except in its entirety without written approval from the laboratory.

AQUA ENVIRONMENTAL LAB
56 Church Hill Road • Newtown, CT 06470 • (203) 270-9973
A York Analytical Company
YORK
ANALYTICAL LABORATORIES INC

Report of Analysis

Name: WSP, USA
4 Research Dr.
Ste. 204
Shelton, CT 06484
Sample Date: 6/20/2022 2:03 PM
Receipt Date: 6/20/2022 2:03 PM
Report Date: 7/26/2022
Sample Site: Summit Well 6A

Sample ID#: 288619
Sample Type: Drinking Water
Sampler: WSP

Parameter	Sample Result	Units	Limits	Method	RL	Analysis Date / Time
Radiochemicals						
Gross Beta	1.50+/-0.830	pCi/L	No Limit Set	EPA 900.0	None	7/18/2022 08:36
Radium 226	0.216+/-0.300	pCi/L	5	EPA 903.0	1	7/21/2022 14:03
Radium 228	0.193+/-0.303	pCi/L	5	EPA 904.0	1	7/21/2022 11:57
Total Gross Alpha	1.84+/-1.46	pCi/L	No Limit Set	EPA 900.0	3	7/18/2022 08:36
Uranium	1.3	ug/L	30	EPA 200.8	1	6/29/2022 16:21

ND = Not Detected
* = Above Specified Limit

Report Approved by: Thomas J. Braun
Lab Director

CT Lic PH-0787 NY Lic 11706

AquaEnvLab.com
YorkLab.com
203 270 9973

Analytical results relate to the samples as received at the laboratory. Report shall not be reproduced except in its entirety without written approval from the laboratory.

AQUA ENVIRONMENTAL LAB
56 Church Hill Road • Newtown, CT 06470 • (203) 270-9973
A York Analytical Company
YORK
ANALYTICAL LABORATORIES INC

Report of Analysis

Name: WSP, USA
4 Research Dr.
Ste. 204
Shelton, CT 06484
Sample Date: 6/20/2022 2:03 PM
Receipt Date: 6/20/2022 2:03 PM
Report Date: 7/1/2022
Sample Site: Summit Well 6A

Sample ID#: 288612
Sample Type: Drinking Water
Sampler: WSP

Parameter	Sample Result	Units	Limits	Method	RL	Analysis Date / Time
Miscellaneous/Other						
Asbestos	ND	MFL	0	EPA 100.2	0.19	6/30/2022 08:18

ND = Not Detected
* = Above Specified Limit

Report Approved by: Thomas J. Braun
Lab Director

CT Lic PH-0787 NY Lic 11706

AquaEnvLab.com
YorkLab.com
203 270 9973

Analytical results relate to the samples as received at the laboratory. Report shall not be reproduced except in its entirety without written approval from the laboratory.

AQUA ENVIRONMENTAL LAB
56 Church Hill Road • Newtown, CT 06470 • (203) 270-9973
A York Analytical Company
YORK
ANALYTICAL LABORATORIES INC

Report of Analysis

Name: WSP, USA
4 Research Dr.
Ste. 204
Shelton, CT 06484
Sample Date: 6/20/2022 2:03 PM
Receipt Date: 6/20/2022 2:03 PM
Report Date: 7/25/2022
Sample Site: Summit Well 6A

Sample ID#: 288615
Sample Type: Drinking Water
Sampler: WSP

Parameter	Sample Result	Units	Limits	Method	RL	Analysis Date / Time
Organic Compounds						
Propylene Glycol	1.1	mg/L	No Limit Set	SW8015	1	7/25/2022 14:00

ND = Not Detected
* = Above Specified Limit

Report Approved by: Thomas J. Braun
Lab Director

CT Lic PH-0787 NY Lic 11706

AquaEnvLab.com
YorkLab.com
203 270 9973

AQUA ENVIRONMENTAL LAB
56 Church Hill Road • Newtown, CT 06470 • (203) 270-9973
A York Analytical Company
YORK
ANALYTICAL LABORATORIES INC

Report of Analysis

Name: WSP, USA
4 Research Dr.
Ste. 204
Shelton, CT 06484
Sample Date: 6/20/2022 2:03 PM
Receipt Date: 6/20/2022 2:03 PM
Report Date: 7/6/2022
Sample Site: Summit Well 6A

Sample ID#: 288617
Sample Type: Drinking Water
Sampler: WSP

Parameter	Sample Result	Units	Limits	Method	RL	Analysis Date / Time
Organic Compounds						
1,4-Dioxane	ND	ug/L	1	EPA 522	0.2	6/24/2022 07:43
PerFluoroButaneSulfonic Acid	ND	ng/L	No Limit Set	EPA 537	1.34	7/1/2022 11:13
PerFluoroHeptanoic Acid	ND	ng/L	No Limit Set	EPA 537	1.34	7/1/2022 11:13
PerFluoroHexaneSulfonic Acid	1.54	ng/L	49	EPA 537	1.34	7/1/2022 11:13
PerFluoroHexanoic Acid	1.78	ng/L	No Limit Set	EPA 537	1.34	7/1/2022 11:13
PerFluoroNonanoic Acid	ND	ng/L	12	EPA 537	1.34	7/1/2022 11:13
PerFluoroOctaneSulfonic Acid	2.29	ng/L	10	EPA 537	1.34	7/1/2022 11:13
PerFluoroOctanoic Acid	3.88	ng/L	16	EPA 537	1.34	7/1/2022 11:13

ND = Not Detected
* = Above Specified Limit

Report Approved by:
Lab Director

CT Lic PH-0787 NY Lic 11706

AquaEnvLab.com
YorkLab.com
203 270 9973

Analytical results relate to the samples as received at the laboratory. Report shall not be reproduced except in its entirety without written approval from the laboratory.

Technical Report
Perfluoroalkyl Substances (PFAS)

prepared for:

Aqua Environmental Lab
56 Church Hill Road
Newtown CT, 06470
Attention: T. Braun

Report Date: 07/05/2022
Client Project ID: 288625/288617/288673
York Project (SDG) No.: 22F1242

CT Cert. No. PH-0723
New Jersey Cert. No. CT005 and NY037
New York Cert. Nos. 10854 and 12058
PA Cert. No. 68-04440

Report Date: 07/05/2022
Client Project ID: 288625/288617/288673
York Project (SDG) No.: 22F1242

Aqua Environmental Lab
56 Church Hill Road
Newtown CT, 06470
Attention: T. Braun

Purpose and Results

This report contains the analytical data for the sample(s) identified on the attached chain-of-custody received in our laboratory on June 23, 2022 and listed below. The project was identified as your project: **288625/288617/288673**.

The analyses were conducted utilizing appropriate EPA methods as detailed in the data summary tables.

All samples were received in proper condition meeting the customary acceptance requirements for environmental samples except those indicated under the Sample and Analysis Qualifiers section of this report.

All analyses met the method and laboratory standard operating procedure requirements except as indicated by any data flags, the meaning of which are explained in the Sample and Data Qualifiers Relating to This Work Order section of this report and case narrative if applicable.

Please contact Client Services at 203.325.1371 with any questions regarding this report or e-mail clientservices@yorklab.com.

York Sample ID	Client Sample ID	Matrix	Date Collected	Date Received
22F1242-01	288625	Drinking Water	06/23/2022	06/23/2022
22F1242-02	288617	Drinking Water	06/23/2022	06/23/2022
22F1242-03	288673	Drinking Water	06/23/2022	06/23/2022
22F1242-04	288625-PFAS-Field Blank	Drinking Water	06/23/2022	06/23/2022
22F1242-05	288617-PFAS-Field Blank	Drinking Water	06/23/2022	06/23/2022
22F1242-06	288673-PFAS-Field Blank	Drinking Water	06/23/2022	06/23/2022

General Notes for York Project (SDG) No.: 22F1242

1. The RLs and MDLs (Reporting Limit and Method Detection Limit respectively) reported are adjusted for any dilution necessary due to the levels of target and/or non-target analytes and matrix interference. The RL(REPORTING LIMIT) is based upon the lowest standard utilized for the calibration where applicable.
2. Samples are retained for a period of thirty days after submittal of report, unless other arrangements are made.
3. York's liability for the above data is limited to the dollar value paid to York for the referenced project.
4. This report shall not be reproduced without the written approval of York Analytical Laboratories, Inc.
5. All analyses conducted met method or Laboratory SOP requirements. See the Sample and Data Qualifiers Section for further information.
6. It is noted that no analyses reported herein were subcontracted to another laboratory, unless noted in the report.
7. This report reflects results that relate only to the samples submitted on the attached chain-of-custody form(s) received by York.
8. Analyses conducted at York Analytical Laboratories, Inc. Stratford, CT are indicated by NY Cert. No. 10854; those conducted at York Analytical Laboratories, Inc., Richmond Hill, NY are indicated by NY Cert. No. 12058.

Approved By: Cassie L. Mosher **Date:** 07/05/2022

Cassie L. Mosher
Laboratory Manager

Sample Information

Client Sample ID: **288625** | **York Sample ID:** **22F1242-01**

York Project (SDG) No.	Client Project ID	Matrix	Collection Date/Time	Date Received
22F1242	288625/288617/288673	Drinking Water	June 23, 2022 8:00 am	06/23/2022

1,4-Dioxane by GC/MS/SIM EPA 522

Log-in Notes: **Sample Notes:**

Sample Prepared by Method: EPA 522

CAS No.	Parameter	Result	Flag	Maximum Contaminant Level MCL, ng/L	Units	Reported to LOQ	Reference Method	Date/Time Analyzed	Analyst
123-91-1	1,4-Dioxane	ND		1	ug/L Certifications:	0.200	EPA 522 NELAC-NY10854	06/24/2022 07:43 06/27/2022 15:05	KH
1693-74-9	*** Tetrahydrofuran-d8**	**0.500**		**0**	ug/mL Certifications:		EPA 522	06/24/2022 07:43 06/27/2022 15:05	KH

	Surrogate Recoveries	Result	Acceptance Range
17647-74-4	*Surrogate: 1,4-Dioxane-d8*	*80.0 %*	*70-130*

PFAS, EPA 537.1 List

Well 3

Log-in Notes: **Sample Notes:**

Sample Prepared by Method: EPA 537.1 SPE DVB

CAS No.	Parameter	Result	Flag	Maximum Contaminant Level MCL, ng/L	Units	Reported to LOQ	Reference Method	Date/Time Analyzed	Analyst
375-73-5	* Perfluorobutanesulfonic acid (PFBS)	ND		0	ng/L Certifications:	1.35	EPA 537.1	07/01/2022 11:13 07/05/2022 13:50	WEL
307-24-4	*** Perfluorohexanoic acid (PFHxA)**	**1.49**		**0**	ng/L Certifications:	1.35	EPA 537.1	07/01/2022 11:13 07/05/2022 13:50	WEL
375-85-9	* Perfluoroheptanoic acid (PFHpA)	ND		0	ng/L Certifications:	1.35	EPA 537.1	07/01/2022 11:13 07/05/2022 13:50	WEL
355-46-4	*** Perfluorohexanesulfonic acid (PFHxS)**	**1.46**		**0**	ng/L Certifications:	1.35	EPA 537.1	07/01/2022 11:13 07/05/2022 13:50	WEL
335-67-1	**Perfluorooctanoic acid (PFOA)**	**3.35**		**10**	ng/L Certifications:	1.35	EPA 537.1 NELAC-NY12058	07/01/2022 11:13 07/05/2022 13:50	WEL
1763-23-1	**Perfluorooctanesulfonic acid (PFOS)**	**2.05**		**10**	ng/L Certifications:	1.35	EPA 537.1 NELAC-NY12058	07/01/2022 11:13 07/05/2022 13:50	WEL
375-95-1	* Perfluorononanoic acid (PFNA)	ND		0	ng/L Certifications:	1.35	EPA 537.1	07/01/2022 11:13 07/05/2022 13:50	WEL
335-76-2	* Perfluorodecanoic acid (PFDA)	ND		0	ng/L Certifications:	1.35	EPA 537.1	07/01/2022 11:13 07/05/2022 13:50	WEL
2058-94-8	* Perfluoroundecanoic acid (PFUnA)	ND		0	ng/L Certifications:	1.35	EPA 537.1	07/01/2022 11:13 07/05/2022 13:50	WEL
307-55-1	* Perfluorododecanoic acid (PFDoA)	ND		0	ng/L Certifications:	1.35	EPA 537.1	07/01/2022 11:13 07/05/2022 13:50	WEL
72629-94-8	* Perfluorotridecanoic acid (PFTrDA)	ND		0	ng/L Certifications:	1.35	EPA 537.1	07/01/2022 11:13 07/05/2022 13:50	WEL
376-06-7	* Perfluorotetradecanoic acid (PFTA)	ND		0	ng/L Certifications:	1.35	EPA 537.1	07/01/2022 11:13 07/05/2022 13:50	WEL
2355-31-9	* N-MeFOSAA	ND		0	ng/L Certifications:	1.35	EPA 537.1	07/01/2022 11:13 07/05/2022 13:50	WEL
2991-50-6	* N-EtFOSAA	ND		0	ng/L Certifications:	1.35	EPA 537.1	07/01/2022 11:13 07/05/2022 13:50	WEL

Sample Information

Client Sample ID: 288625 **York Sample ID:** 22F1242-01

York Project (SDG) No.	Client Project ID	Matrix	Collection Date/Time	Date Received
22F1242	288625/288617/288673	Drinking Water	June 23, 2022 8:00 am	06/23/2022

PFAS, EPA 537.1 List

Log-in Notes: **Sample Notes:**

Sample Prepared by Method: EPA 537.1 SPE DVB

CAS No.	Parameter	Result	Flag	Maximum Contaminant Level MCL, ng/L	Units	Reported to LOQ	Reference Method	Date/Time Analyzed	Analyst
756426-58-1	* 9CL-PF3ONS	ND		0	ng/L Certifications:	1.35	EPA 537.1	07/01/2022 11:13 07/05/2022 13:50	WEL
763051-92-9	* 11CL-PF3OUdS	ND		0	ng/L Certifications:	1.35	EPA 537.1	07/01/2022 11:13 07/05/2022 13:50	WEL
13252-13-6	* HFPO-DA (Gen-X)	ND		0	ng/L Certifications:	1.35	EPA 537.1	07/01/2022 11:13 07/05/2022 13:50	WEL
919005-14-4	* ADONA	ND		0	ng/L Certifications:	1.35	EPA 537.1	07/01/2022 11:13 07/05/2022 13:50	WEL

Surrogate Recoveries	Result	Acceptance Range
Surrogate: d5-N-EtFOSAA	*107 %*	*70-130*
Surrogate: 13C-PFDA	*90.5 %*	*70-130*
Surrogate: 13C-PFHxA	*104 %*	*70-130*
Surrogate: M3HFPO-DA	*96.7 %*	*70-130*

Sample Information

Client Sample ID: 288617 **York Sample ID:** 22F1242-02

York Project (SDG) No.	Client Project ID	Matrix	Collection Date/Time	Date Received
22F1242	288625/288617/288673	Drinking Water	June 23, 2022 9:00 am	06/23/2022

1,4-Dioxane by GC/MS/SIM EPA 522

Log-in Notes: **Sample Notes:**

Sample Prepared by Method: EPA 522

CAS No.	Parameter	Result	Flag	Maximum Contaminant Level MCL, ng/L	Units	Reported to LOQ	Reference Method	Date/Time Analyzed	Analyst
123-91-1	1,4-Dioxane	ND		1	ug/L Certifications:	0.200 NELAC-NY10854	EPA 522	06/24/2022 07:43 06/27/2022 15:25	KH
1693-74-9	*** Tetrahydrofuran-d8**	**0.500**		**0**	ug/mL Certifications:		EPA 522	06/24/2022 07:43 06/27/2022 15:25	KH

	Surrogate Recoveries	Result	Acceptance Range
17647-74-4	*Surrogate: 1,4-Dioxane-d8*	*80.0 %*	*70-130*

PFAS, EPA 537.1 List

Well 6A

Log-in Notes: **Sample Notes:**

Sample Prepared by Method: EPA 537.1 SPE DVB

CAS No.	Parameter	Result	Flag	Maximum Contaminant Level MCL, ng/L	Units	Reported to LOQ	Reference Method	Date/Time Analyzed	Analyst
375-73-5	* Perfluorobutanesulfonic acid (PFBS)	ND		0	ng/L Certifications:	1.43	EPA 537.1	07/01/2022 11:13 07/05/2022 14:03	WEL

Sample Information

Client Sample ID: **288617**

York Sample ID: **22F1242-02**

York Project (SDG) No.	Client Project ID	Matrix	Collection Date/Time	Date Received
22F1242	288625/288617/288673	Drinking Water	June 23, 2022 9:00 am	06/23/2022

PFAS, EPA 537.1 List

Log-in Notes:

Sample Notes:

Sample Prepared by Method: EPA 537.1 SPE DVB

CAS No.	Parameter	Result	Flag	Maximum Contaminant Level MCL, ng/L	Units	Reported to LOQ	Reference Method	Date/Time Analyzed	Analyst
307-24-4	*** Perfluorohexanoic acid (PFHxA)**	**1.78**		**0**	ng/L	1.43	EPA 537.1 Certifications:	07/01/2022 11:13 07/05/2022 14:03	WEL
375-85-9	* Perfluoroheptanoic acid (PFHpA)	ND		0	ng/L	1.43	EPA 537.1 Certifications:	07/01/2022 11:13 07/05/2022 14:03	WEL
355-46-4	*** Perfluorohexanesulfonic acid (PFHxS)**	**1.54**		**0**	ng/L	1.43	EPA 537.1 Certifications:	07/01/2022 11:13 07/05/2022 14:03	WEL
335-67-1	**Perfluorooctanoic acid (PFOA)**	**3.88**		**10**	ng/L	1.43	EPA 537.1 Certifications: NELAC-NY12058	07/01/2022 11:13 07/05/2022 14:03	WEL
1763-23-1	**Perfluorooctanesulfonic acid (PFOS)**	**2.29**		**10**	ng/L	1.43	EPA 537.1 Certifications: NELAC-NY12058	07/01/2022 11:13 07/05/2022 14:03	WEL
375-95-1	* Perfluorononanoic acid (PFNA)	ND		0	ng/L	1.43	EPA 537.1 Certifications:	07/01/2022 11:13 07/05/2022 14:03	WEL
335-76-2	* Perfluorodecanoic acid (PFDA)	ND		0	ng/L	1.43	EPA 537.1 Certifications:	07/01/2022 11:13 07/05/2022 14:03	WEL
2058-94-8	* Perfluoroundecanoic acid (PFUnA)	ND		0	ng/L	1.43	EPA 537.1 Certifications:	07/01/2022 11:13 07/05/2022 14:03	WEL
307-55-1	* Perfluorododecanoic acid (PFDoA)	ND		0	ng/L	1.43	EPA 537.1 Certifications:	07/01/2022 11:13 07/05/2022 14:03	WEL
72629-94-8	* Perfluorotridecanoic acid (PFTrDA)	ND		0	ng/L	1.43	EPA 537.1 Certifications:	07/01/2022 11:13 07/05/2022 14:03	WEL
376-06-7	* Perfluorotetradecanoic acid (PFTA)	ND		0	ng/L	1.43	EPA 537.1 Certifications:	07/01/2022 11:13 07/05/2022 14:03	WEL
2355-31-9	* N-MeFOSAA	ND		0	ng/L	1.43	EPA 537.1 Certifications:	07/01/2022 11:13 07/05/2022 14:03	WEL
2991-50-6	* N-EtFOSAA	ND		0	ng/L	1.43	EPA 537.1 Certifications:	07/01/2022 11:13 07/05/2022 14:03	WEL
756426-58-1	* 9CL-PF3ONS	ND		0	ng/L	1.43	EPA 537.1 Certifications:	07/01/2022 11:13 07/05/2022 14:03	WEL
763051-92-9	* 11CL-PF3OUdS	ND		0	ng/L	1.43	EPA 537.1 Certifications:	07/01/2022 11:13 07/05/2022 14:03	WEL
13252-13-6	* HFPO-DA (Gen-X)	ND		0	ng/L	1.43	EPA 537.1 Certifications:	07/01/2022 11:13 07/05/2022 14:03	WEL
919005-14-4	* ADONA	ND		0	ng/L	1.43	EPA 537.1 Certifications:	07/01/2022 11:13 07/05/2022 14:03	WEL

Surrogate Recoveries	Result	Acceptance Range
Surrogate: d5-N-EtFOSAA	*102 %*	*70-130*
Surrogate: 13C-PFDA	*96.1 %*	*70-130*
Surrogate: 13C-PFHxA	*109 %*	*70-130*
Surrogate: M3HFPO-DA	*101 %*	*70-130*

Sample Information

Client Sample ID: **288673** **York Sample ID:** **22F1242-03**

York Project (SDG) No.	Client Project ID	Matrix	Collection Date/Time	Date Received
22F1242	288625/288617/288673	Drinking Water	June 23, 2022 9:20 am	06/23/2022

1,4-Dioxane by GC/MS/SIM EPA 522

Log-in Notes: **Sample Notes:**

Sample Prepared by Method: EPA 522

CAS No.	Parameter	Result	Flag	Maximum Contaminant Level MCL, ng/L	Units	Reported to LOQ	Reference Method	Date/Time Analyzed	Analyst
123-91-1	1,4-Dioxane	ND		1	ug/L Certifications:	0.200 NELAC-NY10854	EPA 522	06/24/2022 07:43 06/27/2022 15:44	KH
1693-74-9	*** Tetrahydrofuran-d8**	**0.500**		**0**	ug/mL Certifications:		EPA 522	06/24/2022 07:43 06/27/2022 15:44	KH

	Surrogate Recoveries	Result	Acceptance Range
17647-74-4	*Surrogate: 1,4-Dioxane-d8*	*80.0 %*	*70-130*

PFAS, EPA 537.1 List

Well 1

Log-in Notes: **Sample Notes:**

Sample Prepared by Method: EPA 537.1 SPE DVB

CAS No.	Parameter	Result	Flag	Maximum Contaminant Level MCL, ng/L	Units	Reported to LOQ	Reference Method	Date/Time Analyzed	Analyst
375-73-5	* Perfluorobutanesulfonic acid (PFBS)	ND		0	ng/L Certifications:	1.11	EPA 537.1	07/01/2022 11:13 07/05/2022 14:15	WEL
307-24-4	*** Perfluorohexanoic acid (PFHxA)**	**4.48**		**0**	ng/L Certifications:	1.11	EPA 537.1	07/01/2022 11:13 07/05/2022 14:15	WEL
375-85-9	* Perfluoroheptanoic acid (PFHpA)	ND		0	ng/L Certifications:	1.11	EPA 537.1	07/01/2022 11:13 07/05/2022 14:15	WEL
355-46-4	*** Perfluorohexanesulfonic acid (PFHxS)**	**2.22**		**0**	ng/L Certifications:	1.11	EPA 537.1	07/01/2022 11:13 07/05/2022 14:15	WEL
335-67-1	**Perfluorooctanoic acid (PFOA)**	**4.70**		**10**	ng/L Certifications:	1.11 NELAC-NY12058	EPA 537.1	07/01/2022 11:13 07/05/2022 14:15	WEL
1763-23-1	**Perfluorooctanesulfonic acid (PFOS)**	**4.00**		**10**	ng/L Certifications:	1.11 NELAC-NY12058	EPA 537.1	07/01/2022 11:13 07/05/2022 14:15	WEL
375-95-1	* Perfluorononanoic acid (PFNA)	ND		0	ng/L Certifications:	1.11	EPA 537.1	07/01/2022 11:13 07/05/2022 14:15	WEL
335-76-2	* Perfluorodecanoic acid (PFDA)	ND		0	ng/L Certifications:	1.11	EPA 537.1	07/01/2022 11:13 07/05/2022 14:15	WEL
2058-94-8	* Perfluoroundecanoic acid (PFUnA)	ND		0	ng/L Certifications:	1.11	EPA 537.1	07/01/2022 11:13 07/05/2022 14:15	WEL
307-55-1	* Perfluorododecanoic acid (PFDoA)	ND		0	ng/L Certifications:	1.11	EPA 537.1	07/01/2022 11:13 07/05/2022 14:15	WEL
72629-94-8	* Perfluorotridecanoic acid (PFTrDA)	ND		0	ng/L Certifications:	1.11	EPA 537.1	07/01/2022 11:13 07/05/2022 14:15	WEL
376-06-7	* Perfluorotetradecanoic acid (PFTA)	ND		0	ng/L Certifications:	1.11	EPA 537.1	07/01/2022 11:13 07/05/2022 14:15	WEL
2355-31-9	* N-MeFOSAA	ND		0	ng/L Certifications:	1.11	EPA 537.1	07/01/2022 11:13 07/05/2022 14:15	WEL
2991-50-6	* N-EtFOSAA	ND		0	ng/L Certifications:	1.11	EPA 537.1	07/01/2022 11:13 07/05/2022 14:15	WEL
756426-58-1	* 9CL-PF3ONS	ND		0	ng/L Certifications:	1.11	EPA 537.1	07/01/2022 11:13 07/05/2022 14:15	WEL

Sample Information

Client Sample ID: **288673** **York Sample ID:** **22F1242-03**

York Project (SDG) No.	Client Project ID	Matrix	Collection Date/Time	Date Received
22F1242	288625/288617/288673	Drinking Water	June 23, 2022 9:20 am	06/23/2022

PFAS, EPA 537.1 List **Log-in Notes:** **Sample Notes:**

Sample Prepared by Method: EPA 537.1 SPE DVB

CAS No.	Parameter	Result	Flag	Maximum Contaminant Level MCL, ng/L	Units	Reported to LOQ	Reference Method	Date/Time Analyzed	Analyst
763051-92-9	* 11CL-PF3OUdS	ND		0	ng/L Certifications:	1.11	EPA 537.1	07/01/2022 11:13 07/05/2022 14:15	WEL
13252-13-6	* HFPO-DA (Gen-X)	ND		0	ng/L Certifications:	1.11	EPA 537.1	07/01/2022 11:13 07/05/2022 14:15	WEL
919005-14-4	* ADONA	ND		0	ng/L Certifications:	1.11	EPA 537.1	07/01/2022 11:13 07/05/2022 14:15	WEL

Surrogate Recoveries	Result	Acceptance Range
Surrogate: d5-N-EtFOSAA	*96.0 %*	*70-130*
Surrogate: 13C-PFDA	*84.4 %*	*70-130*
Surrogate: 13C-PFHxA	*97.8 %*	*70-130*
Surrogate: M3HFPO-DA	*92.7 %*	*70-130*

Sample Information

Client Sample ID: **288625-PFAS-Field Blank** **York Sample ID:** **22F1242-04**

York Project (SDG) No.	Client Project ID	Matrix	Collection Date/Time	Date Received
22F1242	288625/288617/288673	Drinking Water	June 23, 2022 8:00 am	06/23/2022

PFAS, EPA 537.1 List **Log-in Notes:** **Sample Notes:**

Sample Prepared by Method: EPA 537.1 SPE DVB

CAS No.	Parameter	Result	Flag	Maximum Contaminant Level MCL, ng/L	Units	Reported to LOQ	Reference Method	Date/Time Analyzed	Analyst
375-73-5	* Perfluorobutanesulfonic acid (PFBS)	ND		0	ng/L Certifications:	1.52	EPA 537.1	07/01/2022 11:13 07/05/2022 14:27	WEL
307-24-4	* Perfluorohexanoic acid (PFHxA)	ND		0	ng/L Certifications:	1.52	EPA 537.1	07/01/2022 11:13 07/05/2022 14:27	WEL
375-85-9	* Perfluoroheptanoic acid (PFHpA)	ND		0	ng/L Certifications:	1.52	EPA 537.1	07/01/2022 11:13 07/05/2022 14:27	WEL
355-46-4	* Perfluorohexanesulfonic acid (PFHxS)	ND		0	ng/L Certifications:	1.52	EPA 537.1	07/01/2022 11:13 07/05/2022 14:27	WEL
335-67-1	Perfluorooctanoic acid (PFOA)	ND		10	ng/L Certifications:	1.52	EPA 537.1 NELAC-NY12058	07/01/2022 11:13 07/05/2022 14:27	WEL
1763-23-1	Perfluorooctanesulfonic acid (PFOS)	ND		10	ng/L Certifications:	1.52	EPA 537.1 NELAC-NY12058	07/01/2022 11:13 07/05/2022 14:27	WEL
375-95-1	* Perfluorononanoic acid (PFNA)	ND		0	ng/L Certifications:	1.52	EPA 537.1	07/01/2022 11:13 07/05/2022 14:27	WEL
335-76-2	* Perfluorodecanoic acid (PFDA)	ND		0	ng/L Certifications:	1.52	EPA 537.1	07/01/2022 11:13 07/05/2022 14:27	WEL
2058-94-8	* Perfluoroundecanoic acid (PFUnA)	ND		0	ng/L Certifications:	1.52	EPA 537.1	07/01/2022 11:13 07/05/2022 14:27	WEL

Sample Information

Client Sample ID: **288625-PFAS-Field Blank** **York Sample ID:** **22F1242-04**

York Project (SDG) No.	Client Project ID	Matrix	Collection Date/Time	Date Received
22F1242	288625/288617/288673	Drinking Water	June 23, 2022 8:00 am	06/23/2022

PFAS, EPA 537.1 List

Log-in Notes: **Sample Notes:**

Sample Prepared by Method: EPA 537.1 SPE DVB

CAS No.	Parameter	Result	Flag	Maximum Contaminant Level MCL, ng/L	Units	Reported to LOQ	Reference Method	Date/Time Analyzed	Analyst
307-55-1	* Perfluorododecanoic acid (PFDoA)	ND		0	ng/L Certifications:	1.52	EPA 537.1	07/01/2022 11:13 07/05/2022 14:27	WEL
72629-94-8	* Perfluorotridecanoic acid (PFTrDA)	ND		0	ng/L Certifications:	1.52	EPA 537.1	07/01/2022 11:13 07/05/2022 14:27	WEL
376-06-7	* Perfluorotetradecanoic acid (PFTA)	ND		0	ng/L Certifications:	1.52	EPA 537.1	07/01/2022 11:13 07/05/2022 14:27	WEL
2355-31-9	* N-MeFOSAA	ND		0	ng/L Certifications:	1.52	EPA 537.1	07/01/2022 11:13 07/05/2022 14:27	WEL
2991-50-6	* N-EtFOSAA	ND		0	ng/L Certifications:	1.52	EPA 537.1	07/01/2022 11:13 07/05/2022 14:27	WEL
756426-58-1	* 9CL-PF3ONS	ND		0	ng/L Certifications:	1.52	EPA 537.1	07/01/2022 11:13 07/05/2022 14:27	WEL
763051-92-9	* 11CL-PF3OUdS	ND		0	ng/L Certifications:	1.52	EPA 537.1	07/01/2022 11:13 07/05/2022 14:27	WEL
13252-13-6	* HFPO-DA (Gen-X)	ND		0	ng/L Certifications:	1.52	EPA 537.1	07/01/2022 11:13 07/05/2022 14:27	WEL
919005-14-4	* ADONA	ND		0	ng/L Certifications:	1.52	EPA 537.1	07/01/2022 11:13 07/05/2022 14:27	WEL

Surrogate Recoveries	Result	Acceptance Range
Surrogate: d5-N-EtFOSAA	*107 %*	*70-130*
Surrogate: 13C-PFDA	*95.5 %*	*70-130*
Surrogate: 13C-PFHxA	*104 %*	*70-130*
Surrogate: M3HFPO-DA	*105 %*	*70-130*

Sample Information

Client Sample ID: **288617-PFAS-Field Blank** **York Sample ID:** **22F1242-05**

York Project (SDG) No.	Client Project ID	Matrix	Collection Date/Time	Date Received
22F1242	288625/288617/288673	Drinking Water	June 23, 2022 9:00 am	06/23/2022

PFAS, EPA 537.1 List

Log-in Notes: **Sample Notes:**

Sample Prepared by Method: EPA 537.1 SPE DVB

CAS No.	Parameter	Result	Flag	Maximum Contaminant Level MCL, ng/L	Units	Reported to LOQ	Reference Method	Date/Time Analyzed	Analyst
375-73-5	* Perfluorobutanesulfonic acid (PFBS)	ND		0	ng/L Certifications:	1.92	EPA 537.1	07/01/2022 11:13 07/05/2022 15:04	WEL
307-24-4	* Perfluorohexanoic acid (PFHxA)	ND		0	ng/L Certifications:	1.92	EPA 537.1	07/01/2022 11:13 07/05/2022 15:04	WEL
375-85-9	* Perfluoroheptanoic acid (PFHpA)	ND		0	ng/L Certifications:	1.92	EPA 537.1	07/01/2022 11:13 07/05/2022 15:04	WEL

Sample Information

Client Sample ID: **288617-PFAS-Field Blank** **York Sample ID:** **22F1242-05**

York Project (SDG) No.	Client Project ID	Matrix	Collection Date/Time	Date Received
22F1242	288625/288617/288673	Drinking Water	June 23, 2022 9:00 am	06/23/2022

PFAS, EPA 537.1 List

Log-in Notes: **Sample Notes:**

Sample Prepared by Method: EPA 537.1 SPE DVB

CAS No.	Parameter	Result	Flag	Maximum Contaminant Level MCL, ng/L	Units	Reported to LOQ	Reference Method	Date/Time Analyzed	Analyst
355-46-4	* Perfluorohexanesulfonic acid (PFHxS)	ND		0	ng/L Certifications:	1.92	EPA 537.1	07/01/2022 11:13 07/05/2022 15:04	WEL
335-67-1	Perfluorooctanoic acid (PFOA)	ND		10	ng/L Certifications: NELAC-NY12058	1.92	EPA 537.1	07/01/2022 11:13 07/05/2022 15:04	WEL
1763-23-1	Perfluorooctanesulfonic acid (PFOS)	ND		10	ng/L Certifications: NELAC-NY12058	1.92	EPA 537.1	07/01/2022 11:13 07/05/2022 15:04	WEL
375-95-1	* Perfluorononanoic acid (PFNA)	ND		0	ng/L Certifications:	1.92	EPA 537.1	07/01/2022 11:13 07/05/2022 15:04	WEL
335-76-2	* Perfluorodecanoic acid (PFDA)	ND		0	ng/L Certifications:	1.92	EPA 537.1	07/01/2022 11:13 07/05/2022 15:04	WEL
2058-94-8	* Perfluoroundecanoic acid (PFUnA)	ND		0	ng/L Certifications:	1.92	EPA 537.1	07/01/2022 11:13 07/05/2022 15:04	WEL
307-55-1	* Perfluorododecanoic acid (PFDoA)	ND		0	ng/L Certifications:	1.92	EPA 537.1	07/01/2022 11:13 07/05/2022 15:04	WEL
72629-94-8	* Perfluorotridecanoic acid (PFTrDA)	ND		0	ng/L Certifications:	1.92	EPA 537.1	07/01/2022 11:13 07/05/2022 15:04	WEL
376-06-7	* Perfluorotetradecanoic acid (PFTA)	ND		0	ng/L Certifications:	1.92	EPA 537.1	07/01/2022 11:13 07/05/2022 15:04	WEL
2355-31-9	* N-MeFOSAA	ND		0	ng/L Certifications:	1.92	EPA 537.1	07/01/2022 11:13 07/05/2022 15:04	WEL
2991-50-6	* N-EtFOSAA	ND		0	ng/L Certifications:	1.92	EPA 537.1	07/01/2022 11:13 07/05/2022 15:04	WEL
756426-58-1	* 9CL-PF3ONS	ND		0	ng/L Certifications:	1.92	EPA 537.1	07/01/2022 11:13 07/05/2022 15:04	WEL
763051-92-9	* 11CL-PF3OUdS	ND		0	ng/L Certifications:	1.92	EPA 537.1	07/01/2022 11:13 07/05/2022 15:04	WEL
13252-13-6	* HFPO-DA (Gen-X)	ND		0	ng/L Certifications:	1.92	EPA 537.1	07/01/2022 11:13 07/05/2022 15:04	WEL
919005-14-4	* ADONA	ND		0	ng/L Certifications:	1.92	EPA 537.1	07/01/2022 11:13 07/05/2022 15:04	WEL

Surrogate Recoveries	Result	Acceptance Range
Surrogate: d5-N-EtFOSAA	*95.7 %*	*70-130*
Surrogate: 13C-PFDA	*82.6 %*	*70-130*
Surrogate: 13C-PFHxA	*87.4 %*	*70-130*
Surrogate: M3HFPO-DA	*91.1 %*	*70-130*

Sample Information

Client Sample ID: **288673-PFAS-Field Blank** **York Sample ID:** **22F1242-06**

York Project (SDG) No.	Client Project ID	Matrix	Collection Date/Time	Date Received
22F1242	288625/288617/288673	Drinking Water	June 23, 2022 9:20 am	06/23/2022

YORK
ANALYTICAL LABORATORIES INC

Sample Information

Client Sample ID: **288673-PFAS-Field Blank** **York Sample ID:** **22F1242-06**

York Project (SDG) No.	Client Project ID	Matrix	Collection Date/Time	Date Received
22F1242	288625/288617/288673	Drinking Water	June 23, 2022 9:20 am	06/23/2022

PFAS, EPA 537.1 List **Log-in Notes:** **Sample Notes:**

Sample Prepared by Method: EPA 537.1 SPE DVB

CAS No.	Parameter	Result	Flag	Maximum Contaminant Level MCL, ng/L	Units	Reported to LOQ	Reference Method	Date/Time Analyzed	Analyst
375-73-5	* Perfluorobutanesulfonic acid (PFBS)	ND		0	ng/L Certifications:	2.00	EPA 537.1	07/01/2022 11:13 07/05/2022 15:18	WEL
307-24-4	* Perfluorohexanoic acid (PFHxA)	ND		0	ng/L Certifications:	2.00	EPA 537.1	07/01/2022 11:13 07/05/2022 15:18	WEL
375-85-9	* Perfluoroheptanoic acid (PFHpA)	ND		0	ng/L Certifications:	2.00	EPA 537.1	07/01/2022 11:13 07/05/2022 15:18	WEL
355-46-4	* Perfluorohexanesulfonic acid (PFHxS)	ND		0	ng/L Certifications:	2.00	EPA 537.1	07/01/2022 11:13 07/05/2022 15:18	WEL
335-67-1	Perfluorooctanoic acid (PFOA)	ND		10	ng/L Certifications: NELAC-NY12058	2.00	EPA 537.1	07/01/2022 11:13 07/05/2022 15:18	WEL
1763-23-1	Perfluorooctanesulfonic acid (PFOS)	ND		10	ng/L Certifications: NELAC-NY12058	2.00	EPA 537.1	07/01/2022 11:13 07/05/2022 15:18	WEL
375-95-1	* Perfluorononanoic acid (PFNA)	ND		0	ng/L Certifications:	2.00	EPA 537.1	07/01/2022 11:13 07/05/2022 15:18	WEL
335-76-2	* Perfluorodecanoic acid (PFDA)	ND		0	ng/L Certifications:	2.00	EPA 537.1	07/01/2022 11:13 07/05/2022 15:18	WEL
2058-94-8	* Perfluoroundecanoic acid (PFUnA)	ND		0	ng/L Certifications:	2.00	EPA 537.1	07/01/2022 11:13 07/05/2022 15:18	WEL
307-55-1	* Perfluorododecanoic acid (PFDoA)	ND		0	ng/L Certifications:	2.00	EPA 537.1	07/01/2022 11:13 07/05/2022 15:18	WEL
72629-94-8	* Perfluorotridecanoic acid (PFTrDA)	ND		0	ng/L Certifications:	2.00	EPA 537.1	07/01/2022 11:13 07/05/2022 15:18	WEL
376-06-7	* Perfluorotetradecanoic acid (PFTA)	ND		0	ng/L Certifications:	2.00	EPA 537.1	07/01/2022 11:13 07/05/2022 15:18	WEL
2355-31-9	* N-MeFOSAA	ND		0	ng/L Certifications:	2.00	EPA 537.1	07/01/2022 11:13 07/05/2022 15:18	WEL
2991-50-6	* N-EtFOSAA	ND		0	ng/L Certifications:	2.00	EPA 537.1	07/01/2022 11:13 07/05/2022 15:18	WEL
756426-58-1	* 9CL-PF3ONS	ND		0	ng/L Certifications:	2.00	EPA 537.1	07/01/2022 11:13 07/05/2022 15:18	WEL
763051-92-9	* 11CL-PF3OUdS	ND		0	ng/L Certifications:	2.00	EPA 537.1	07/01/2022 11:13 07/05/2022 15:18	WEL
13252-13-6	* HFPO-DA (Gen-X)	ND		0	ng/L Certifications:	2.00	EPA 537.1	07/01/2022 11:13 07/05/2022 15:18	WEL
919005-14-4	* ADONA	ND		0	ng/L Certifications:	2.00	EPA 537.1	07/01/2022 11:13 07/05/2022 15:18	WEL

Surrogate Recoveries	Result	Acceptance Range
Surrogate: d5-N-EtFOSAA	*96.6 %*	*70-130*
Surrogate: 13C-PFDA	*91.1 %*	*70-130*
Surrogate: 13C-PFHxA	*107 %*	*70-130*
Surrogate: M3HFPO-DA	*113 %*	*70-130*

Analytical Batch Summary

Batch ID: BF21540 **Preparation Method:** EPA 522 **Prepared By:** SJB

YORK Sample ID	Client Sample ID	Preparation Date
22F1242-01	288625	06/24/22
22F1242-02	288617	06/24/22
22F1242-03	288673	06/24/22
BF21540-BLK1	Blank	06/24/22
BF21540-BS1	LCS	06/24/22
BF21540-BS2	LCS	06/24/22
BF21540-DUP1	Duplicate	06/24/22
BF21540-MS1	Matrix Spike	06/24/22

Batch ID: BG20029 **Preparation Method:** EPA 537.1 SPE DVB **Prepared By:** WEL

YORK Sample ID	Client Sample ID	Preparation Date
22F1242-01	288625	07/01/22
22F1242-02	288617	07/01/22
22F1242-03	288673	07/01/22
22F1242-04	288625-PFAS-Field Blank	07/01/22
22F1242-05	288617-PFAS-Field Blank	07/01/22
22F1242-06	288673-PFAS-Field Blank	07/01/22
BG20029-BLK1	Blank	07/01/22
BG20029-BS1	LCS	07/01/22
BG20029-DUP1	Duplicate	07/01/22
BG20029-MS1	Matrix Spike	07/01/22

Semivolatile Organic Compounds by GC/MS/SIM - Quality Control Data

York Analytical Laboratories, Inc.

Analyte	Result	Reporting Limit	Units	Spike Level	Source* Result	%REC	%REC Limits	Flag	RPD	RPD Limit	Flag
Batch BF21540 - EPA 522											
Blank (BF21540-BLK1)							Prepared: 06/24/2022 Analyzed: 06/27/2022				
1,4-Dioxane	ND	0.200	ug/L								
Surrogate: 1,4-Dioxane-d8	*2.80*		*"*	*2.50*		*112*	*70-130*				
LCS (BF21540-BS1)							Prepared: 06/24/2022 Analyzed: 06/27/2022				
1,4-Dioxane	4.66	0.200	ug/L	5.00		93.2	70-130				
Surrogate: 1,4-Dioxane-d8	*2.20*		*"*	*2.50*		*88.0*	*70-130*				
LCS (BF21540-BS2)							Prepared: 06/24/2022 Analyzed: 06/27/2022				
1,4-Dioxane	8.86	0.200	ug/L	10.0		88.6	70-130				
Surrogate: 1,4-Dioxane-d8	*2.20*		*"*	*2.50*		*88.0*	*70-130*				
Duplicate (BF21540-DUP1)	*Source sample: 22F0847-01 (Duplicate)						Prepared: 06/24/2022 Analyzed: 06/27/2022				
1,4-Dioxane	ND	0.200	ug/L		ND					30	
Surrogate: 1,4-Dioxane-d8	*2.60*		*"*	*2.50*		*104*	*70-130*				
Matrix Spike (BF21540-MS1)	*Source sample: 22F0765-01 (Matrix Spike)						Prepared: 06/24/2022 Analyzed: 06/27/2022				
1,4-Dioxane	4.17	0.200	ug/L	5.00	ND	83.4	70-130				
Surrogate: 1,4-Dioxane-d8	*2.40*		*"*	*2.50*		*96.0*	*70-130*				

Batch BG20029 - EPA 537.1 SPE DVB

Blank (BG20029-BLK1)

Prepared: 07/01/2022 Analyzed: 07/05/2022

Analyte	Result	Reporting Limit	Units	Spike Level	Source* Result	%REC	%REC Limits	Flag	RPD	RPD Limit	Flag
Perfluorobutanesulfonic acid (PFBS)	ND	2.00	ng/L								
Perfluorohexanoic acid (PFHxA)	ND	2.00	"								
Perfluoroheptanoic acid (PFHpA)	ND	2.00	"								
Perfluorohexanesulfonic acid (PFHxS)	ND	2.00	"								
Perfluorooctanoic acid (PFOA)	ND	2.00	"								
Perfluorooctanesulfonic acid (PFOS)	ND	2.00	"								
Perfluorononanoic acid (PFNA)	ND	2.00	"								
Perfluorodecanoic acid (PFDA)	ND	2.00	"								
Perfluoroundecanoic acid (PFUnA)	ND	2.00	"								
Perfluorododecanoic acid (PFDoA)	ND	2.00	"								
Perfluorotridecanoic acid (PFTrDA)	ND	2.00	"								
Perfluorotetradecanoic acid (PFTA)	ND	2.00	"								
N-MeFOSAA	ND	2.00	"								
N-EtFOSAA	ND	2.00	"								
9CL-PF3ONS	ND	2.00	"								
11CL-PF3OUdS	ND	2.00	"								
HFPO-DA (Gen-X)	ND	2.00	"								
ADONA	ND	2.00	"								
Surrogate: d5-N-EtFOSAA	*287*		"	*320*		*89.5*	*70-130*				
Surrogate: 13C-PFDA	*69.4*		"	*80.0*		*86.8*	*70-130*				
Surrogate: 13C-PFHxA	*75.8*		"	*80.0*		*94.7*	*70-130*				
Surrogate: M3HFPO-DA	*73.2*		"	*80.0*		*91.5*	*70-130*				

LCS (BG20029-BS1)

Prepared: 07/01/2022 Analyzed: 07/05/2022

Analyte	Result	Reporting Limit	Units	Spike Level	Source* Result	%REC	%REC Limits	Flag	RPD	RPD Limit	Flag
Perfluorobutanesulfonic acid (PFBS)	32.3	2.00	ng/L	35.4		91.1	70-130				
Perfluorohexanoic acid (PFHxA)	34.8	2.00	"	40.0		87.0	70-130				
Perfluoroheptanoic acid (PFHpA)	36.5	2.00	"	40.0		91.2	70-130				
Perfluorohexanesulfonic acid (PFHxS)	35.4	2.00	"	38.0		93.0	70-130				
Perfluorooctanoic acid (PFOA)	37.9	2.00	"	40.0		94.7	70-130				
Perfluorooctanesulfonic acid (PFOS)	37.2	2.00	"	38.4		96.9	70-130				
Perfluorononanoic acid (PFNA)	38.4	2.00	"	40.0		95.9	70-130				
Perfluorodecanoic acid (PFDA)	32.7	2.00	"	40.0		81.7	70-130				
Perfluoroundecanoic acid (PFUnA)	36.4	2.00	"	40.0		91.0	70-130				
Perfluorododecanoic acid (PFDoA)	36.4	2.00	"	40.0		91.1	70-130				
Perfluorotridecanoic acid (PFTrDA)	31.3	2.00	"	40.0		78.2	70-130				
Perfluorotetradecanoic acid (PFTA)	32.5	2.00	"	40.0		81.2	70-130				
N-MeFOSAA	37.4	2.00	"	40.0		93.5	70-130				
N-EtFOSAA	37.5	2.00	"	40.0		93.6	70-130				
9CL-PF3ONS	33.9	2.00	"	37.4		90.6	60-130				
11CL-PF3OUdS	31.1	2.00	"	37.8		82.3	60-130				
HFPO-DA (Gen-X)	33.8	2.00	"	40.0		84.6	60-130				
ADONA	32.7	2.00	"	37.8		86.5	60-130				
Surrogate: d5-N-EtFOSAA	*337*		"	*320*		*105*	*70-130*				
Surrogate: 13C-PFDA	*74.7*		"	*80.0*		*93.3*	*70-130*				
Surrogate: 13C-PFHxA	*83.2*		"	*80.0*		*104*	*70-130*				
Surrogate: M3HFPO-DA	*78.9*		"	*80.0*		*98.6*	*70-130*				

Analyte	Result	Reporting Limit	Units	Spike Level	Source* Result	%REC	%REC Limits	Flag	RPD	RPD Limit	Flag
Batch BG20029 - EPA 537.1 SPE DVB											
Duplicate (BG20029-DUP1)	*Source sample: 22F1242-04 (288625-PFAS-Field Blank)							Prepared: 07/01/2022 Analyzed: 07/05/2022			
Perfluorobutanesulfonic acid (PFBS)	ND	2.17	ng/L		ND					25	
Perfluorohexanoic acid (PFHxA)	ND	2.17	"		ND					25	
Perfluoroheptanoic acid (PFHpA)	ND	2.17	"		ND					25	
Perfluorohexanesulfonic acid (PFHxS)	ND	2.17	"		ND					25	
Perfluorooctanoic acid (PFOA)	ND	2.17	"		ND					25	
Perfluorooctanesulfonic acid (PFOS)	ND	2.17	"		ND					25	
Perfluorononanoic acid (PFNA)	ND	2.17	"		ND					25	
Perfluorodecanoic acid (PFDA)	ND	2.17	"		ND					25	
Perfluoroundecanoic acid (PFUnA)	ND	2.17	"		ND					25	
Perfluorododecanoic acid (PFDoA)	ND	2.17	"		ND					25	
Perfluorotridecanoic acid (PFTrDA)	ND	2.17	"		ND					25	
Perfluorotetradecanoic acid (PFTA)	ND	2.17	"		ND					25	
N-MeFOSAA	ND	2.17	"		ND					25	
N-EtFOSAA	ND	2.17	"		ND					25	
9CL-PF3ONS	ND	2.17	"		ND					25	
11CL-PF3OUdS	ND	2.17	"		ND					25	
HFPO-DA (Gen-X)	ND	2.17	"		ND					25	
ADONA	ND	2.17	"		ND					25	
Surrogate: d5-N-EtFOSAA	*348*		"	*348*		*100*	*70-130*				
Surrogate: 13C-PFDA	*77.2*		"	*87.0*		*88.8*	*70-130*				
Surrogate: 13C-PFHxA	*87.6*		"	*87.0*		*101*	*70-130*				
Surrogate: M3HFPO-DA	*84.0*		"	*87.0*		*96.6*	*70-130*				
Matrix Spike (BG20029-MS1)	*Source sample: 22F1306-01 (Matrix Spike)							Prepared: 07/01/2022 Analyzed: 07/05/2022			
Perfluorobutanesulfonic acid (PFBS)	58.9	2.00	ng/L	70.8	ND	83.1	70-130				
Perfluorohexanoic acid (PFHxA)	64.6	2.00	"	80.0	ND	80.7	70-130				
Perfluoroheptanoic acid (PFHpA)	69.6	2.00	"	80.0	ND	87.0	70-130				
Perfluorohexanesulfonic acid (PFHxS)	71.2	2.00	"	76.0	ND	93.7	70-130				
Perfluorooctanoic acid (PFOA)	72.3	2.00	"	80.0	ND	90.4	70-130				
Perfluorooctanesulfonic acid (PFOS)	68.0	2.00	"	76.8	ND	88.6	70-130				
Perfluorononanoic acid (PFNA)	68.4	2.00	"	80.0	ND	85.5	70-130				
Perfluorodecanoic acid (PFDA)	65.0	2.00	"	80.0	ND	81.2	70-130				
Perfluoroundecanoic acid (PFUnA)	67.1	2.00	"	80.0	ND	83.9	70-130				
Perfluorododecanoic acid (PFDoA)	64.8	2.00	"	80.0	ND	81.0	70-130				
Perfluorotridecanoic acid (PFTrDA)	60.5	2.00	"	80.0	ND	75.6	70-130				
Perfluorotetradecanoic acid (PFTA)	63.2	2.00	"	80.0	ND	79.0	70-130				
N-MeFOSAA	73.5	2.00	"	80.0	ND	91.8	70-130				
N-EtFOSAA	69.6	2.00	"	80.0	ND	87.0	70-130				
9CL-PF3ONS	67.2	2.00	"	74.8	ND	89.9	70-130				
11CL-PF3OUdS	59.4	2.00	"	75.6	ND	78.5	70-130				
HFPO-DA (Gen-X)	59.2	2.00	"	80.0	ND	74.0	70-130				
ADONA	60.6	2.00	"	75.6	ND	80.2	50-130				
Surrogate: d5-N-EtFOSAA	*304*		"	*320*		*94.9*	*70-130*				
Surrogate: 13C-PFDA	*70.4*		"	*80.0*		*88.0*	*70-130*				
Surrogate: 13C-PFHxA	*77.0*		"	*80.0*		*96.2*	*70-130*				
Surrogate: M3HFPO-DA	*72.0*		"	*80.0*		*90.0*	*70-130*				

Sample and Data Qualifiers Relating to This Work Order

Definitions and Other Explanations

*	Analyte is not certified or the state of the samples origination does not offer certification for the Analyte.
ND	NOT DETECTED - the analyte is not detected at the Reported to level (LOQ/RL or LOD/MDL)
RL	REPORTING LIMIT - the minimum reportable value based upon the lowest point in the analyte calibration curve.
LOQ	LIMIT OF QUANTITATION - the minimum concentration of a target analyte that can be reported within a specified degree of confidence. This is the lowest point in an analyte calibration curve that has been subjected to all steps of the processing/analysis and verified to meet defined criteria. This is based upon NELAC 2009 Standards and applies to all analyses.
LOD	LIMIT OF DETECTION - a verified estimate of the minimum concentration of a substance in a given matrix that an analytical process can reliably detect. This is based upon NELAC 2009 Standards and applies to all analyses conducted under the auspices of EPA SW-846.
MDL	METHOD DETECTION LIMIT - a statistically derived estimate of the minimum amount of a substance an analytical system can reliably detect with a 99% confidence that the concentration of the substance is greater than zero. This is based upon 40 CFR Part 136 Appendix B and applies only to EPA 600 and 200 series methods.
Reported to	This indicates that the data for a particular analysis is reported to either the LOD/MDL, or the LOQ/RL. In cases where the "Reported to" is located above the LOD/MDL, any value between this and the LOQ represents an estimated value which is "J" flagged accordingly. This applies to volatile and semi-volatile target compounds only.
NR	Not reported
RPD	Relative Percent Difference
Wet	The data has been reported on an as-received (wet weight) basis
Low Bias	Low Bias flag indicates that the recovery of the flagged analyte is below the laboratory or regulatory lower control limit. The data user should take note that this analyte may be biased low but should evaluate multiple lines of evidence including the LCS and site-specific MS/MSD data to draw bias conclusions. In cases where no site-specific MS/MSD was requested, only the LCS data can be used to evaluate such bias.
High Bias	High Bias flag indicates that the recovery of the flagged analyte is above the laboratory or regulatory upper control limit. The data user should take note that this analyte may be biased high but should evaluate multiple lines of evidence including the LCS and site-specific MS/MSD data to draw bias conclusions. In cases where no site-specific MS/MSD was requested, only the LCS data can be used to evaluate such bias.
Non-Dir.	Non-dir. flag (Non-Directional Bias) indicates that the Relative Percent Difference (RPD) (a measure of precision) among the MS and MSD data is outside the laboratory or regulatory control limit. This alerts the data user where the MS and MSD are from site-specific samples that the RPD is high due to either non-homogeneous distribution of target analyte between the MS/MSD or indicates poor reproducibility for other reasons.
MCL	This is the Maximum Contaminant Level in ng/L (ppt) establised by the NYSDOH for these compounds wheree an MCL is reported. Exceedences are flagged according.

YORK ANALYTICAL LABORATORIES INC

Field Chain-of-Custody Record

York Analytical Laboratories, Inc. (YORK)'s Standard Terms & Conditions are listed on the back side of this document.
This document serves as your written authorization for YORK to proceed with the analyses requested below.
Your signature binds you to YORK's Standard Terms & Conditions.

YORK Project No. 22F1242

120 Research Drive Stratford, CT 06615 | 132-02 89th Ave Queens, NY 11418 | clientservices@yorklab.com | www.yorklab.com | 800-306-YORK | 800-306-9675

Page ______ of ______

YOUR Information	Report To:	Invoice To:
Company:	Company: Agua Environmental Lab	Company:
Address:	Address:	Address:
Phone.:	Phone.:	Phone.:
Contact:	Contact:	Contact:
E-mail:	E-mail:	E-mail:

YOUR Project Number

YOUR Project Name

YOUR PO#:

Turn-Around Time
- RUSH - Next Day ☐
- RUSH - Two Day ☐
- RUSH - Three Day ☐
- RUSH - Four Day ☐
- **Standard (5-7 Day)** ☐

Please print clearly and legibly. All information must be complete. Samples will not be logged in and the turn-around-time clock will not begin until any questions by YORK are resolved.

Samples Collected by: (print AND sign your name)

Matrix Codes
- S - soil / solid
- GW - groundwater
- [✓ DW - drinking water]
- WW - wastewater
- O - Oil | Other

Samples From
- New York ☑
- New Jersey ☐
- Connecticut ☐
- Pennsylvania ☐
- Other:

Report / EDD Type (circle selections)

Summary Report	CT RCP	Standard Excel EDD
QA Report	CT RCP DQA/DUE	EQuIS (Standard)
NY ASP A Package	NJDEP Reduced Deliverables	NYSDEC EQuIS
NY ASP B Package	NJDKQP	NJDEP SRP HazSite
		Other:

YORK Reg. Comp.
Compared to the following Regulation(s): (please fill in)

Sample Identification	Sample Matrix	Date/Time Sampled	Analysis Requested	Container Description
288625	DW	6/23/22 8:00 am	PFAS Method 537 18 Compound &	1,4 Dioxane
288617	DW	6/23/22 9:00 am	PFAS Method 537 18 Compound &	1,4 Dioxane
288673	DW	6/23/22 9:20 am	PFAS Method 537 18 Compound +	1,4 Dioxane

Comments:

Samples iced/chilled at time of lab pickup? circle Yes or No

Preservation: (check all that apply)
HCl ____ MeOH ____ HNO3 ____ H2SO4 ____ NaOH ____
ZnAc ____ Ascorbic Acid ____ Other: ________________

Special Instruction
- Field Filtered ☐
- Lab to Filter ☐

Samples Relinquished by / Company Date/Time 6/23/22 12:55 pm	1. Samples Received by / Company Date/Time	2. Samples Relinquished by / Company SBeeman Date/Time 6/23 13:55
Samples Received by / Company Date/Time	3. Samples Relinquished by / Company Date/Time	3. Samples Received by / Company Date/Time
Samples Relinquished by / Company Date/Time	4. Samples Received by / Company Date/Time	Samples Received in LAB by Date/Time 6/23/22 1355 Temperature 1.0 Degrees C

EnviroTest
Laboratories Inc.

ANALYTICAL REPORT

Job Number: 420-227328-1

SDG Number: Summit Club Well 6A

Job Description: WSP USA

For:
WSP USA
4 Research Drive
Shelton, CT 06464

Attention: Stacy Stieber

Mary Hernandez
Customer Service Manager
reports@envirotestlaboratories.com
08/17/2022

EnviroTest Laboratories, LLC. Certifications and Approvals: NYSDOH 10142, NJDEP NY015, CTDOPH PH-0554

Envirotest Laboratories
315 Fullerton Avenue, Newburgh, NY 12550
Tel (845) 562-0890 Fax (845) 562-0841 www.envirotestlaboratories.com

METHOD SUMMARY

Client: WSP USA

Job Number: 420-227328-1
SDG Number: Summit Club Well 6A

Description	Lab Location	Method	Preparation Method
Matrix: Water			
General Sub Contract Method		Subcontract	

Lab References:

=

Method References:

SAMPLE SUMMARY

Client: WSP USA

Job Number: 420-227328-1
SDG Number: Summit Club Well 6A

Lab Sample ID	Client Sample ID	Client Matrix	Date/Time Sampled	Date/Time Received
420-227328-1	Well 6A	Water	06/22/2022 0855	06/22/2022 1145

CC1320

Page ____ of ____

Analytical Services, Inc.

CHAIN OF CUSTODY RECORD

Ship to: Analytical Services, Inc., 130 Allen Brook Lane, Williston, VT 05495, Attn: Sample Management
Phone: 1-800-723-4432 or 802-878-5138 • Fax: 802-878-6765 *Web site: www.analyticalservices.com*

Submitted By: WSP USA
4 Research Drive, Suite 204
Shelton, CT 06484
Phone: 475-882-1723 Email: stacy.stieber@wsp.com

Report To: Stacy Stieber
WSP USA
~~Shelton~~ 4 Research Drive
Shelton, CT 06484
Phone: 475-882-1723 Email: stacy.stieber@wsp.com

Project Name	Summit Club
Job Site	31403576.002
P.O. Number	

Invoice To:

Phone: Email:

Sample Identification*	Sample Collection			Sample Matrix check one						Analysis Requested	Lab Use Only
	Date (Start)	Time (Start)	Sampler Initials	Water - Raw	Water - Finished	Waste Water	Biosolids	Soil/Sediment	Other		Temp (ºC)
Well 6A	6/22/22	855	SZ	X						MPA w/ IFA	

*Sample ID should match ID written on the sample containers and data sheets. Sample ID will appear on the report for identification.

Relinquished By (signature)	Date/Time	Received By (signature)	Date/Time
	6/22/22 1145		6/22/22 1145

Field Comments:

Lab Comments:

White – To accompany samples • Yellow – Sampler Copy

LOGIN SAMPLE RECEIPT CHECK LIST

Client: WSP USA

Job Number: 420-227328-1
SDG Number: Summit Club Well 6A

Login Number: **227328**

Question	T/F/NA	Comment
Samples were collected by ETL employee as per SOP-SAM-1	NA	
The cooler's custody seal, if present, is intact.	NA	
The cooler or samples do not appear to have been compromised or tampered with.	True	
Samples were received on ice.	True	
Cooler Temperature is recorded.	True	2.2C
Cooler Temp. is within method specified range.(0-4 C PW, 0-6 C NPW, or BAC <10 C	True	
If false, was sample received on ice within 6 hours of collection.	NA	
Based on above criteria cooler temperature is acceptable.	True	
COC is present.	True	
COC is filled out in ink and legible.	True	
COC is filled out with all pertinent information.	True	
There are no discrepancies between the sample IDs on the containers and the COC.	True	
Samples are received within Holding Time.	True	
Sample containers have legible labels.	True	
Containers are not broken or leaking.	True	
Sample collection date/times are provided.	True	
Appropriate sample containers are used.	True	
Sample bottles are completely filled.	True	
There is sufficient vol. for all requested analyses, incl. any requested MS/MSDs	True	
VOA sample vials do not have headspace or bubble is <6mm (1/4") in diameter.	NA	
If necessary, staff have been informed of any short hold time or quick TAT needs	True	
Multiphasic samples are not present.	True	
Samples do not require splitting or compositing.	True	

ANALYTICAL SERVICES, INC.
Microbiological Testing, Research and Consulting

130 Allen Brook Ln., PO Box 515, Williston, VT 05495 USA
1.800.723.4432 / 802.878.5138 Fax: 802.878.6765
www.analyticalservices.com

8/15/2022

Ron Bayer
EnviroTest Laboratories
315 Fullerton Ave
Newburgh, NY 12550

Subj.: ASI Report 69086

Dear Ron,

Enclosed please find the results of Microscopic Particulate Analysis (MPA) performed by Analytical Services, Inc. (ASI).

Sample(s) covered in this report were received at ASI on: 6/23/2022

This report contains the following number of pages (total): 5

This report concerns only the samples referenced herein. These results were generated under ASI's quality system, which is in accordance with the NELAC (TNI) standard. Deviations, if any, are noted.

Exceptions: NA

This report shall not be reproduced, except in full, without ASI's written permission.

Thank you for using ASI for your microbiological testing needs. If you have any questions, please contact us at 800-723-4432.

Sincerely,
ANALYTICAL SERVICES, INC. (ASI)
RWarden
Harry D. Christman, Ph.D. (for)
Technical Director

Microscopic Particulate Analysis (MPA)

Sample Information

Client	EnviroTest Laboratories	Volume Sampled (gal)	788.4
Site	Summit Club	Filter Color	Off-White
Water Type	Raw/Well	Sediment Volume (mL)	0.3
Client Sample ID	Well 1	Analysis Start	6/23/22 12:00
ASI Sample #	69086-01	Analysis End	8/4/22

MPA Data (data per 100 gal.)

Vol. Examined at 150x (gal.)	100	Detection Limit at 150X =	1.0
Vol. Examined at 300x (gal.)	NA	Detection Limit at 300X =	NA
Amorphous Debris	Uniform	Iron Bacteria	ND
Vegetative Debris w/ chlorophyll	ND	Crustaceans	ND
Veg. Debris w/o chlorophyll	1	Crustacean Parts/Eggs	ND
Diatoms w/ chlorophyll (300X)	ND	Water Mites	ND
Diatoms w/o chlorophyll (300X)	ND	Gastrotrichs	ND
Other Algae (300X, see below)	ND	Tardigrades	ND
Coccidia (300x)	ND	Nematodes/N. Eggs	ND
Rotifiers / Rotifier Eggs	ND	Invertebrate Eggs	ND
Spores	ND	Annelids	ND
Pollen	ND	Amoeba	ND
Insects/Larvae	ND	Protozoa (300X, non-Crypto/Giardia)	ND

Cryptosporidium and Giardia Data

Volume Examined (gal.) 394.2

	RESULTS	
	Examined	Per 100gal
Cryptosporidium Oocysts:	0	<0.25
Giardia Cysts:	0	<0.25

MPA Risk Rating Score (per EPA Consensus Method)

Numerical Score	0	Risk Rating	Low

Other

Algae Observed	NA
Comments	NA

Methods: MPA - SOP based on EPA Consensus Method (EPA 910/9-92-029)

Cryptosporidium & Giardia - SOP based on purification, staining & exam procedures in EPA 1623/1623.1

Notes MPA Risk Rating Tables were developed by USEPA Region 10 from limited data; interpret with caution.

MPA Risk Rating Score - if less than 100 gallons was examined, interpret with caution.

Microscopic Particulate Analysis (MPA)

Sample Information

Client	EnviroTest Laboratories	Volume Sampled (gal)	562.2
Site	Summit Club	Filter Color	Off-White
Water Type	Raw/Well	Sediment Volume (mL)	0.2
Client Sample ID	Well 6A	Analysis Start	6/23/22 12:35
ASI Sample #	69086-02	Analysis End	8/4/22

MPA Data (data per 100 gal.)

Vol. Examined at 150x (gal.)	100	Detection Limit at 150X =	1.0
Vol. Examined at 300x (gal.)	NA	Detection Limit at 300X =	NA
Amorphous Debris	Uniform	Iron Bacteria	ND
Vegetative Debris w/ chlorophyll	ND	Crustaceans	ND
Veg. Debris w/o chlorophyll	4	Crustacean Parts/Eggs	ND
Diatoms w/ chlorophyll (300X)	ND	Water Mites	ND
Diatoms w/o chlorophyll (300X)	ND	Gastrotrichs	ND
Other Algae (300X, see below)	ND	Tardigrades	ND
Coccidia (300x)	ND	Nematodes/N. Eggs	ND
Rotifiers / Rotifier Eggs	ND	Invertebrate Eggs	ND
Spores	ND	Annelids	ND
Pollen	ND	Amoeba	ND
Insects/Larvae	ND	Protozoa (300X, non-Crypto/Giardia)	ND

Cryptosporidium and Giardia Data

Volume Examined (gal.)	281.1	RESULTS	
		Examined	Per 100gal
	Cryptosporidium Oocysts:	0	<0.36
	Giardia Cysts:	0	<0.36

MPA Risk Rating Score (per EPA Consensus Method)

Numerical Score	0	Risk Rating	Low

Other

Algae Observed	NA
Comments	NA

Methods: MPA - SOP based on EPA Consensus Method (EPA 910/9-92-029)

Cryptosporidium & Giardia - SOP based on purification, staining & exam procedures in EPA 1623/1623.1

Notes MPA Risk Rating Tables were developed by USEPA Region 10 from limited data; interpret with caution.

MPA Risk Rating Score - if less than 100 gallons was examined, interpret with caution.

3/5

227330

Analytical Services, Inc.

Page ___ of ___

CHAIN OF CUSTODY RECORD

Ship to: Analytical Services, Inc., 130 Allen Brook Lane, Williston, VT 05495, Attn: Sample Management
Phone: 1-800-723-4432 or 802-878-5138 • Fax: 802-878-6765 *Web site: www.analyticalservices.com*

Submitted By: WSP USA
4 Research Drive, Ste 204
Shelton, CT 06484
Phone: 475-882-1723 Email: stacy.stieber@wsp.com

Report To: Stacy Stieber
WSP USA
4 Research Drive, Ste 204
Shelton, CT 06484
Phone: 475-882-1723 Email: stacy.stieber@wsp.com

Project Name	Summit Club
Job Site	
P.O. Number	31403576.002

Invoice To: ___

Phone: ___ Email: ___

Sample Identification*	Sample Collection			Sample Matrix check one						Analysis Requested	Lab Use Only
	Date (Start)	Time (Start)	Sampler Initials	Water - Raw	Water - Finished	Waste Water	Biosolids	Soil/Sediment	Other		Temp (°C)
Well 1	6/22/22	850	SZ	X						MPA w/ IFA	8.7°

*Sample ID should match ID written on the sample containers and data sheets. Sample ID will appear on the report for identification.

Relinquished By (signature)	Date/Time	Received By (signature)	Date/Time
	6/22/22 11:45		6/22/22 1145
	6/22/22 1525		6/23/22 1040

Field Comments:

Lab Comments:

1/5

White – To accompany samples • Yellow – Sampler Copy

227328

Page ___ of ___

Analytical Services, Inc.

CHAIN OF CUSTODY RECORD

Ship to: Analytical Services, Inc., 130 Allen Brook Lane, Williston, VT 05495, Attn: Sample Management
Phone: 1-800-723-4432 or 802-878-5138 • Fax: 802-878-6765 *Web site: www.analyticalservices.com*

Submitted By: WSP USA
4 Research Drive, Suite 204
Shelton, CT 06484

Phone: 475-882-1723 Email: stacy.stieber@wsp.com

Report To: Stacy Stieber
WSP USA
~~Shelton~~ 4 Research Drive
Shelton, CT 06484

Phone: 475-882-1723 Email: stacy.stieber@wsp.com

Project Name: Summit Club

Job Site: 31403576.002

P.O. Number:

Invoice To:

Phone: Email:

Sample Identification*	Sample Collection			Sample Matrix (check one)						Analysis Requested	Lab Use Only
	Date (Start)	Time (Start)	Sampler Initials	Water - Raw	Water - Finished	Waste Water	Biosolids	Soil/Sediment	Other		Temp (°C)
Well 6A	6/22/22	855	SZ	X						MPA w/ IFA	6.0°

*Sample ID should match ID written on the sample containers and data sheets. Sample ID will appear on the report for identification.

Relinquished By (signature)	Date/Time	Received By (signature)	Date/Time
	6/22/22 1145		6/22/22 1145
	6/22/22 1520		6/23/22 1040

Field Comments:

Lab Comments:

r/r

White – To accompany samples • Yellow – Sampler Copy

APPENDIX VIII

SUMMIT COUNTRY CLUB
568 BEDFORD ROAD
NORTH CASTLE, NEW YORK

Graphs of Physical Parameter Measurements Collected from Pumping Well 1, 6A, and Nearby Surface Water During 72 Hour Pumping Test Program Conducted on Wells 1, 3, and 6A, June 2022

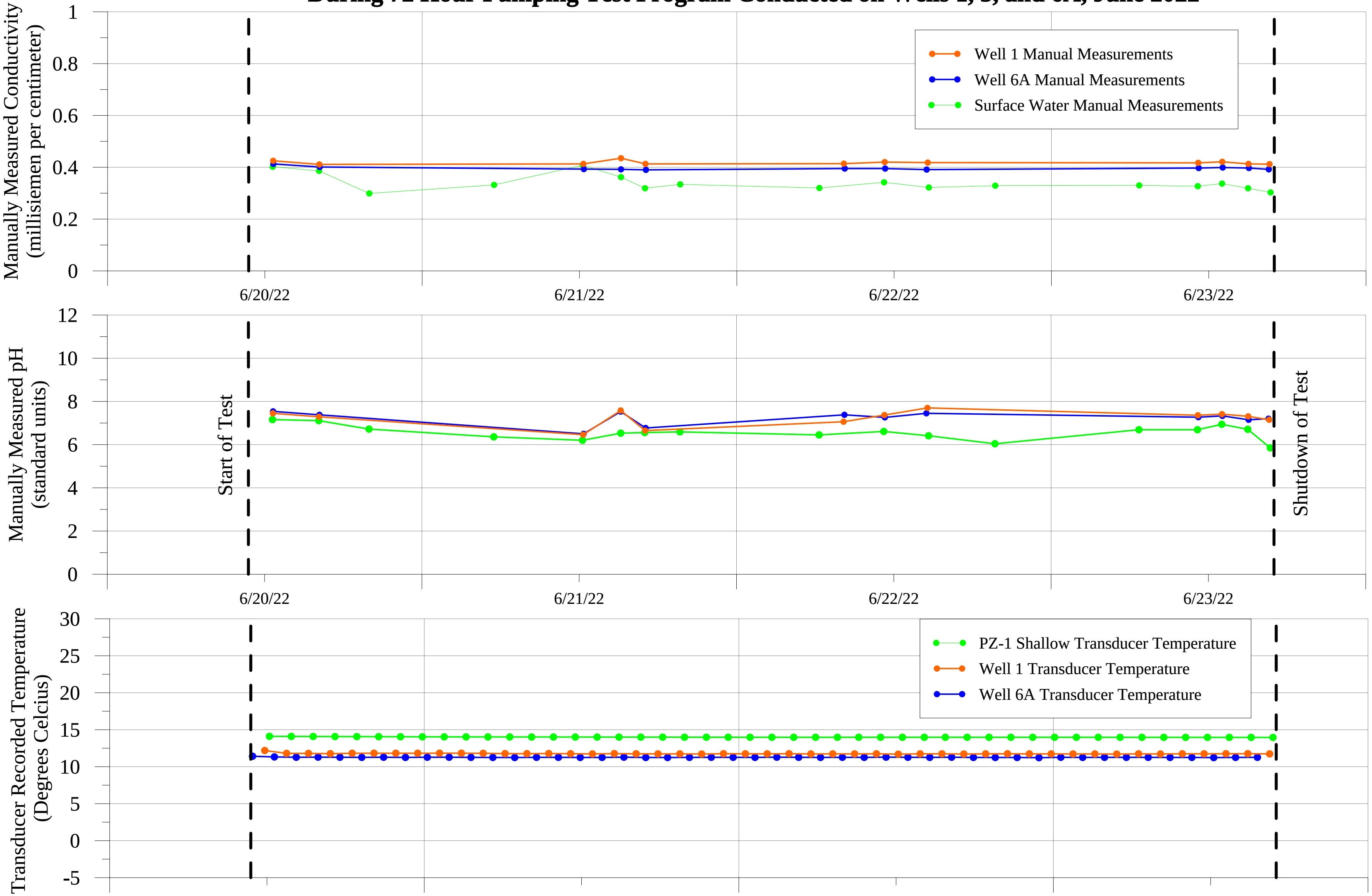

SUMMIT COUNTRY CLUB
568 BEDFORD ROAD
NORTH CASTLE, NEW YORK

Physical Parameter pH and Conductivity Measurements Collected from Pumping Wells 1 and 6A
and Nearby Surface Water During the 72-Hour Pumping Test Conducted on Wells 1, 3 and 6A, June 2022

Date/Time	pH (S.U.)	Conductivity (mS/cm)
Well 1		
6/20/2022 12:38	7.45	0.425
6/20/2022 16:09	7.29	0.411
6/21/2022 12:18	6.46	0.413
6/21/2022 15:10	7.58	0.435
6/21/2022 17:02	6.65	0.413
6/22/2022 8:10	7.06	0.414
6/22/2022 11:17	7.37	0.420
6/22/2022 14:34	7.70	0.418
6/23/2022 11:12	7.36	0.417
6/23/2022 13:02	7.41	0.421
6/23/2022 15:02	7.31	0.413
6/23/2022 16:38	7.15	0.412
Well 6A		
6/20/2022 12:39	7.54	0.413
6/20/2022 16:11	7.38	0.401
6/21/2022 12:20	6.50	0.393
6/21/2022 15:10	7.53	0.392
6/21/2022 17:04	6.77	0.390
6/22/2022 8:14	7.38	0.395
6/22/2022 11:19	7.26	0.395
6/22/2022 14:29	7.45	0.391
6/23/2022 11:14	7.27	0.397
6/23/2022 13:04	7.33	0.399
6/23/2022 15:04	7.15	0.397
6/23/2022 16:35	7.20	0.392
Surface Water		
6/20/2022 12:36	7.16	0.402
6/20/2022 16:08	7.11	0.386
6/20/2022 19:58	6.72	0.299
6/21/2022 5:29	6.36	0.332
6/21/2022 12:15	6.20	0.408
6/21/2022 15:10	6.53	0.362
6/21/2022 17:00	6.56	0.319
6/21/2022 19:41	6.59	0.334
6/22/2022 6:18	6.45	0.320
6/22/2022 11:14	6.61	0.342
6/22/2022 14:39	6.41	0.322
6/22/2022 19:43	6.04	0.329
6/23/2022 6:42	6.69	0.330
6/23/2022 11:10	6.69	0.327
6/23/2022 13:01	6.94	0.337
6/23/2022 15:00	6.71	0.319
6/23/2022 16:43	5.85	0.303

S.U.	standard units
mS/cm	microSiemen per centimeter

SUMMIT COUNTRY CLUB
568 BEDFORD ROAD
NORTH CASTLE, NEW YORK

Temperature Measurements Collected from Pumping Wells 1 and 6A
and Shallow Groundwater at PZ-1 During the 72-Hour Pumping Test Conducted on Wells 1, 3 and 6A, June 2022

Date	Time	Well 1 Temperature (degrees Celsius)	Well 6 Temperature (degrees Celsius)	PZ-1 Temperature (degrees Celsius)
6/20/2022	11:00	12.07	11.37	14.11
6/20/2022	12:00	12.22	11.31	14.11
6/20/2022	13:00	11.85	11.29	14.10
6/20/2022	14:00	11.82	11.30	14.10
6/20/2022	15:00	11.76	11.28	14.09
6/20/2022	16:00	11.73	11.29	14.09
6/20/2022	17:00	11.83	11.29	14.08
6/20/2022	18:00	11.85	11.27	14.08
6/20/2022	19:00	11.83	11.27	14.07
6/20/2022	20:00	11.82	11.26	14.07
6/20/2022	21:00	11.85	11.26	14.06
6/20/2022	22:00	11.81	11.28	14.06
6/20/2022	23:00	11.82	11.27	14.05
6/21/2022	0:00	11.80	11.27	14.04
6/21/2022	1:00	11.81	11.28	14.04
6/21/2022	2:00	11.82	11.26	14.04
6/21/2022	3:00	11.80	11.27	14.04
6/21/2022	4:00	11.80	11.26	14.03
6/21/2022	5:00	11.77	11.28	14.03
6/21/2022	6:00	11.80	11.27	14.03
6/21/2022	7:00	11.78	11.26	14.02
6/21/2022	8:00	11.75	11.26	14.02
6/21/2022	9:00	11.79	11.29	14.02
6/21/2022	10:00	11.73	11.28	14.02
6/21/2022	11:00	11.75	11.26	14.02
6/21/2022	12:00	11.73	11.26	14.01
6/21/2022	13:00	11.75	11.28	14.01
6/21/2022	14:00	11.74	11.26	14.00
6/21/2022	15:00	11.71	11.27	14.00
6/21/2022	16:00	11.74	11.26	14.00
6/21/2022	17:00	11.72	11.26	14.00
6/21/2022	18:00	11.74	11.27	14.00
6/21/2022	19:00	11.73	11.31	13.99
6/21/2022	20:00	11.76	11.26	13.99
6/21/2022	21:00	11.75	11.26	13.99
6/21/2022	22:00	11.74	11.24	13.99
6/21/2022	23:00	11.77	11.28	13.98
6/22/2022	0:00	11.75	11.27	13.98
6/22/2022	1:00	11.76	11.25	13.98
6/22/2022	2:00	11.77	11.29	13.98
6/22/2022	3:00	11.75	11.27	13.98
6/22/2022	4:00	11.76	11.26	13.98
6/22/2022	5:00	11.74	11.26	13.98
6/22/2022	6:00	11.74	11.27	13.98
6/22/2022	7:00	11.73	11.28	13.98
6/22/2022	8:00	11.72	11.27	13.98
6/22/2022	9:00	11.73	11.25	13.98
6/22/2022	10:00	11.72	11.27	13.98
6/22/2022	11:00	11.74	11.26	13.98
6/22/2022	12:00	11.72	11.26	13.98
6/22/2022	13:00	11.73	11.27	13.98
6/22/2022	14:00	11.71	11.26	13.98

SUMMIT COUNTRY CLUB
568 BEDFORD ROAD
NORTH CASTLE, NEW YORK

Temperature Measurements Collected from Pumping Wells 1 and 6A and Shallow Groundwater at PZ-1 During the 72-Hour Pumping Test Conducted on Wells 1, 3 and 6A, June 2022

Date	Time	Well 1 Temperature (degrees Celsius)	Well 6 Temperature (degrees Celsius)	PZ-1 Temperature (degrees Celsius)
6/22/2022	15:00	11.74	11.27	13.99
6/22/2022	16:00	11.73	11.25	13.98
6/22/2022	17:00	11.75	11.25	13.98
6/22/2022	18:00	11.74	11.26	13.98
6/22/2022	19:00	11.73	11.27	13.98
6/22/2022	20:00	11.73	11.26	13.98
6/22/2022	21:00	11.72	11.27	13.98
6/22/2022	22:00	11.75	11.27	13.98
6/22/2022	23:00	11.74	11.25	13.98
6/23/2022	0:00	11.71	11.26	13.98
6/23/2022	1:00	11.73	11.27	13.98
6/23/2022	2:00	11.73	11.28	13.98
6/23/2022	3:00	11.74	11.27	13.98
6/23/2022	4:00	11.75	11.23	13.97
6/23/2022	5:00	11.73	11.26	13.98
6/23/2022	6:00	11.75	11.27	13.98
6/23/2022	7:00	11.75	11.27	13.97
6/23/2022	8:00	11.74	11.26	13.97
6/23/2022	9:00	11.74	11.27	13.97
6/23/2022	10:00	11.75	11.27	13.97
6/23/2022	11:00	11.75	11.25	13.97
6/23/2022	12:00	11.76	11.25	13.97
6/23/2022	13:00	11.76	11.25	13.97
6/23/2022	14:00	11.75	11.26	13.96
6/23/2022	15:00	11.73	11.27	13.96
6/23/2022	16:00	11.77	11.24	13.96
6/23/2022	17:00	11.90	11.31	13.96

APPENDIX IV

Baker Water Systems Division
Municipal and Industrial Water System Products

Toll Free: (800) 356-5130 Contact Us ›

About Us | Careers | Find a Distributor | Latest News

Standard Pitless Units - NSF 61 Certified

(./App III - Standard Pitless Units _ Industrial Pitless Units _ Pitless Units _ Baker Water Systems Division_files/StandardPitlessUnit.jpg)

Click the images to view full size

(https://www.bakermonitor.com/sites/default/files/standardpitless2.jpg)

(https://www.bakermonitor.com/sites/default/files/standardpitless3.jpg)

(https://www.bakermonitor.com/sites/default/files/standardpitless4.jpg)

(https://www.bakermonitor.com/sites/default/files/standard_industrial.gif)

The Monitor Standard Pitless Unit is a specialized piece of equipment manufactured specifically for the purpose of completing a Municipal / Industrial water well. The Monitor Standard Industrial Pitless Unit attaches to the well casing and provides a sanitary underground discharge to the water treatment facility. The Standard Pitless Units are available for the following well diameters: 6” (http://www.bakermonitor.com/content/standard-pitless-units/6-id-standard-industrial-pitless-units), 6.6” (http://www.bakermonitor.com/content/standard-pitless-units/66-id-standard-industrial-pitless-units), 8” (http://www.bakermonitor.com/content/standard-pitless-units/8-id-standard-industrial-pitless-units), 10” (http://www.bakermonitor.com/content/standard-pitless-units/10-id-standard-industrial-pitless-units), 12” (http://www.bakermonitor.com/content/standard-pitless-units/12-pitless-units), 14” (http://www.bakermonitor.com/content/standard-pitless-units/14-pitless-units), and 16” (http://www.bakermonitor.com/content/standard-pitless-units/16-pitless-units).

Monitor Industrial Pitless Unit Features and Options

The Standard Pitless Unit is manufactured using a cast spool and discharge Body. The spool and discharge body are galvanized using Lead-Free Zinc for long term corrosion protection. Monitor Standard Pitless Units are shipped as complete factory pressure tested pitless unit including the Watertight Premium Well Cap, Upper Bury Depth Casing Extension, Discharge Body, Spool, Discharge and Drop Connection, Lift-Out Bail, and Hold-Down Assembly.

Standard Industrial Pitless Unit Available Options

- ***NSF 61 Approved***
- Epoxy Coating
- API Drop Pipe and Discharge Threads
- Cap Cable Seals
- Locking Seal Caps
- Flowing Well Spools
- Flanged Upper Casing
- Water Sampler Valves
- Wire Seals
- Probe Tubes
- Additional conduit entrance connections for signal wires

Installation Instructions (https://www.bakermonitor.com/content/standard-pitless-units-installation-instructions)

Shipping Weights (https://www.bakermonitor.com/content/shipping-weights)

Spools And Cable Seals (https://www.bakermonitor.com/content/spools-spool-cable-seals)

O-Ring Selection Guide (https://www.bakermonitor.com/content/o-ring-selection-guide)

Application Photos (https://www.bakermonitor.com/content/standard-pitless-unit-application-photos)

For CAD drawing contact sales at 800-356-5130 or e-mail monitorsales@baker-mfg.com.

Features | Specifications | Parts Breakdown | Component Materials | Ordering Instructions

Monitor Standard Pitless Units are shipped as complete factory pressure tested pitless unit including:

- Watertight Premium Well Cap
- Upper Bury Depth Casing Extension
- Discharge Body, Spool
- Discharge and Drop Connection
- Lift-Out Bail
- Hold-Down Assembly

Available options:

- Epoxy coating
- API drop pipe and discharge threads
- Cap cable seals
- Locking seal caps
- Flowing well spools
- Flanged upper casing

- Water sampler valves
- Wire seals
- Probe tubes
- Additional conduit entrance connections for signal wires.

Monitor units conform to the Recommended Standards for Water Works, Great Lakes Upper Mississippi River Board of State Public Health & Environmental Managers, Water Systems Council and PAS-97 (04) Standards.

Sitemap

6" I.D. STANDARD INDUSTRIAL PITLESS UNITS

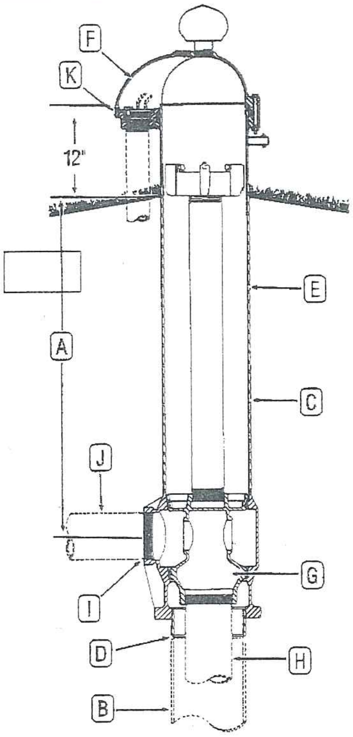

DESCRIPTION - ORDERING NUMBERS

A	3	Bury Depth in Feet	
	PS	Pitless Unit for Submersible Pump	
B	6	Well Size - Ins.	
C	7	Upper Case Size - Ins.	
D	W	Attachment to Well Casing	W–Welded N–Compression
E	B	Black Upper Case	
F	W	Watertight Cap w/Screened Air Vent	
	E	Pressure Equalizing Spool Passages	
G	2	No. of Check Valves: (**0** or **2**)	
H	3	Drop Pipe I.D. Ins.	
I	T	Threaded NPT Std. Connection	
		Flange, ASA 150#	Accessory Discharge Connections
		Welded	
		Mech. Joint w/transition sleeve	
J	3	Discharge I.D. Ins.	
K	S	Elec. Cable Seal (**S**) O.D. 3 Wire____ O.D. Grounding Wire_____	
OPTIONS		Flowing Well (**F**)	
		Special Provision (**X**)	

EXPLANATION OF PITLESS UNIT

ORDERING NUMBERS

The diagram illustrates the meaning of the various letters and numerals used in Monitor Standard Industrial Pitless Unit ordering numbers. A typical order number and the pitless unit it stands for are shown.

Typical Order Number

3PS67WBWE23T3S

3 — **A.** The first numeral in the order number indicates the bury depth, in feet. Bury depth on all units is measured from the center of the discharge line to ground level. The top of the pitless case extends 12" above ground level as is required by many codes. However, any length can be manufactured.

PS — These letters indicate the type of pump the pitless unit is designed for. The unit shown is a PS for submersible pumps.

6 — **B.** This numeral indicates the well casing size, 6" I.D.

7 — **C.** This numeral indicates the upper pitless case size, 7" I.D.

W — **D.** Indicates the attachment to the well casing is a welded joint ("N" for KwiKonect - 6" I.D. & 8" I.D. only).

B — **E.** Indicates the upper pitless case is black pipe.

W — **F.** Indicates the unit has a watertight cap with screened vent installed.

E — **G.** Indicates spool has pressure equalizing passages, for venting well.

2 — This numeral indicates the type of spool which the pitless unit has. In this case it is a spool having two silent check valves.

3 — **H.** Indicates the size of drop pipe in inches.

T — **I.** Indicates the discharge connection is threaded.

3 — **J.** Indicates the size of discharge pipe in inches.

S — **K.** Sealed Conduit Connection. (Optional)

TECHNICAL BROCHURE

B35-85GS

FEATURES

Powered for Continuous Operation: All ratings are within the working limits of the motor as recommended by the motor manufacturer. Pump can be operated continuously without damage to the motor.

Field Serviceable: Units have left hand threads and are field serviceable with common tools and readily available repair parts.

Sand Handling Design: Our face clearance, floating impeller stack has proven itself for over 50 years as a superior sand handling, durable pump design.

FDA Compliant Non-Metallic Parts: Impellers, diffusers and bearing spiders are constructed of glass filled engineered composites. They are corrosion resistant and non-toxic.

Discharge Head/Check Valve: Cast 303 stainless steel for strength and durability. Two cast-in safety line loops for installer convenience. The built-in check valve is constructed of stainless steel and FDA compliant BUNA rubber for abrasion resistance and quiet operation.

Motor Adapter: Cast 303 stainless steel for rigid, accurate alignment of pump and motor. Easy access to motor mounting nuts using standard open end wrench.

Stainless Steel Casing: Polished stainless steel is strong and corrosion resistant.

Hex Shaft Design: Six sided shafts for positive impeller drive.

Engineered Polymer Bearings: The proprietary, engineered polymer bearing material is strong and resistant to abrasion and wear. The enclosed upper bearing is mounted in a durable Noryl® bearing spider for excellent abrasion resistance.

e-GS

35GS, 45GS, 65GS & 85GS

35-85 GPM 1-10HP, 60 HZ, SUBMERSIBLE PUMPS

GOULDS
WATER TECHNOLOGY
a xylem brand

WATER END DATA

Series	Model	Required HP	Stages	Water End	
				Length (in)	Weight (lbs)
35GS	35GS10	1	6	14.2	8
	35GS15	1.5	8	16.6	9
	35GS20	2	10	19.1	10
	35GS30	3	14	24.0	13
	35GS50	5	23	36.4	20
	35GS75	7.5	36	53.0	28
	35GS100	10	46	65.2	34
45GS	45GS15	1.5	5	12.9	8
	45GS20	2	7	15.4	9
	45GS30	3	10	19.0	10
	45GS50	5	17	27.7	15
	45GS75	7.5	25	38.9	21
	45GS100	10	34	50.6	27
65GS	65GS15	1.5	6	19.1	10
	65GS20	2	7	21.2	11
	65GS30	3	10	27.4	12
	65GS50	5	16	41.2	18
	65GS75	7.5	26	62.3	35
	65GS100	10	33	76.8	42
85GS	85GS30	3	8	29.4	13
	85GS50	5	14	42.8	18
	85GS75	7.5	21	63.8	35
	85GS100	10	27	79.9	41

NOMENCLATURE – SOLD AS WATER ENDS ONLY

35 GS 20

GPM at Best Efficiency — 35, 45, 65, 85

GS Pump Series

Horsepower Code

10 = 1
15 = 1$^1/_2$
20 = 2
30 = 3
50 = 5
75 = 7$^1/_2$
100 = 10

SPECIFICATIONS

Model	Flow Range GPM	Horse-Power Range	Best Efficiency GPM	Discharge Connection	Minimum Well Size	Rotation
35GS	10-50	1.0 - 10	35	2"	4"	CCW
45GS	20 - 65	1.5 - 10	45	2"	4"	CCW
65GS	30 - 80	1.5 - 10	65	2"	4"	CCW
85GS	40 - 120	3.0 - 10	85	2"	4"	CCW

"GS" SERIES MATERIALS OF CONSTRUCTION

Part Name	Material
Discharge Head	AISI 303 SS
Check Valve Poppet	AISI 303 SS
Check Valve Seal	BUNA, FDA Compliant
Check Valve Seat	AISI 304 SS
Check Valve Retaining Ring	AISI 302 SS
Bearing Spider - Upper	Noryl
Bearing	Proprietary Engineered Polymer
Klipring	AISI 301 SS
Diffuser	Noryl
Impeller	Noryl
Bowl	AISI 304 SS
Intermediate Sleeve*	AISI 304 SS, Powder Metal
Intermediate Shaft Coupling*	AISI 304 SS, Powder Metal
Intermediate Bearing Spider*	Noryl
Intermediate Bearing Spider*	AISI 303 SS
Shim	AISI 304 SS
Screws - Cable Guard	AISI 304 SS
Motor Adapter	AISI 303 SS
Casing	AISI 304 SS
Shaft	17-4 PH Stainless Steel
Coupling	AISI 304 SS, Powder Metal
Cable Guard	AISI 304 SS
Suction Screen	AISI 304 SS

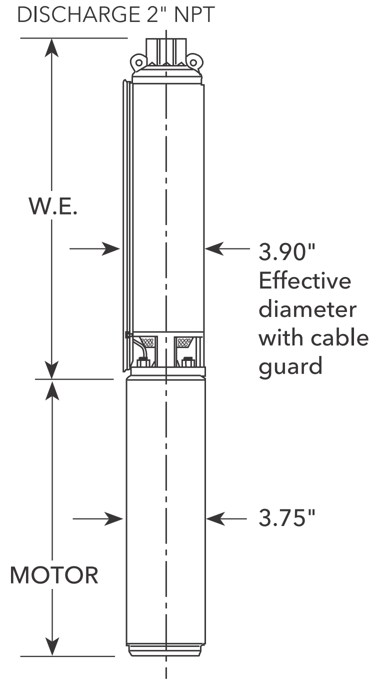

CENTRIPRO 4" SINGLE-PHASE MOTORS

Order No.	Type	HP	Volts	Length in. (mm)	Weight lb. (kg.)
M10422	2-wire	1	230	13.3 (337)	24.5 (11.1)
M15422	PSC	1.5		14.9 (378)	28.9 (13.1)
M10412	3-wire	1	230	11.7 (297)	23.1 (10.5)
M15412		1.5		13.6 (345)	27.4 (12.4)
M20412		2		15.1 (383)	31.0 (14.1)
M30412		3		18.3 (466)	40.0 (18.1)
M50412		5		27.7 (703)	70.0 (31.8)

CENTRIPRO 4" THREE-PHASE MOTORS

Order No.	HP	Volts	Length in. (mm)	Weight lb. (kg.)
M10430	1	200	11.7 (297)	22 (10.4)
M15430	1.5		11.7 (297)	22 (10.4)
M20430	2		13.8 (351)	28 (12.7)
M30430	3		15.3 (389)	32 (14.5)
M50430	5		21.7 (550)	55 (24.9)
M75430	7.5		27.7 (703)	70 (31.8)
M10432	1	230	11.7 (297)	23 (10.4)
M15432	1.5		11.7 (297)	23 (10.4)
M20432	2		13.8 (351)	28 (12.7)
M30432	3		15.3 (389)	32 (14.5)
M50432	5		21.7 (550)	55 (24.9)
M75432	7.5		27.7 (703)	70 (31.8)
M10434	1	460	11.7 (297)	23 (10.4)
M15434	1.5		11.7 (297)	23 (10.4)
M20434	2		13.8 (351)	28 (12.7)
M30434	3		15.3 (389)	32 (14.5)
M50434	5		21.7 (550)	55 (24.9)
M75434	7.5		27.7 (703)	70 (31.8)
M100434	10		–	–
M15437	1.5	575	11.7 (297)	23 (10.4)
M20437	2		15.3 (389)	32 (14.5)
M30437	3		15.3 (389)	32 (14.5)
M50437	5		27.7 (703)	70 (31.8)
M75437	7.5		27.7 (703)	70 (31.8)

NEMA MOTOR

- Corrosion resistant stainless steel construction.
- Built-in surge arrestor is provided on single phase motors through 5 HP.
- Stainless steel splined shaft.
- Hermetically sealed windings.
- Replaceable motor lead assembly.
- NEMA mounting dimensions.
- Control box is required with 3 wire single phase units.
- Three phase units require a magnetic starter with three leg Class 10 overload protection.

AGENCY LISTINGS

CentriPro Motor - tested to UL778 and CAN 22.2 by CSA International (Canadian Standards Association)

CentriPro Motor - Certified to NSF/ANSI 61, Annex G, Drinking Water System Components 4P49

NSF/ANSI 372 – Drinking Water System Components – Lead Content

CLASS 6853 01 - Low Lead Content Certification Program - - Plumbing Products

Model 35GS

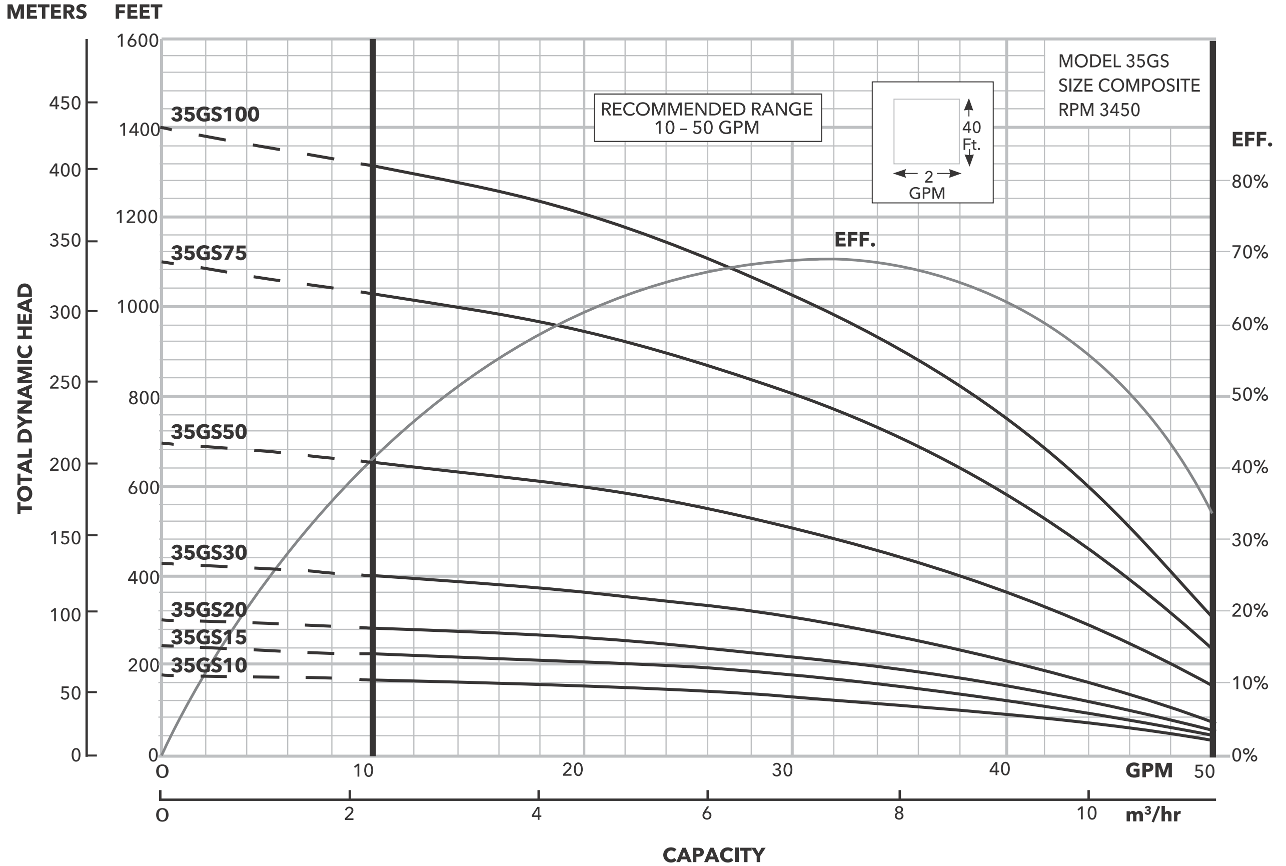

Model 45GS

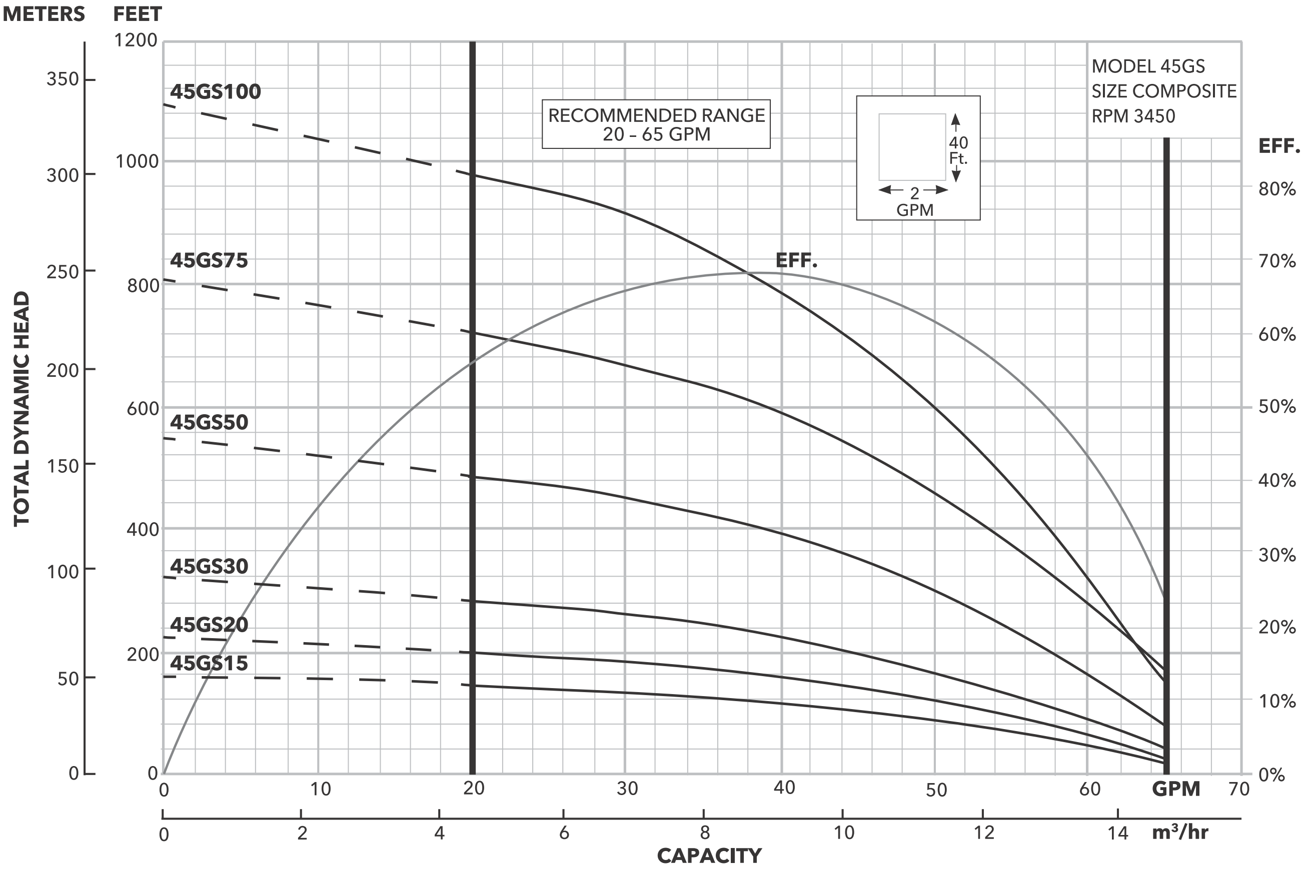

Model 65GS

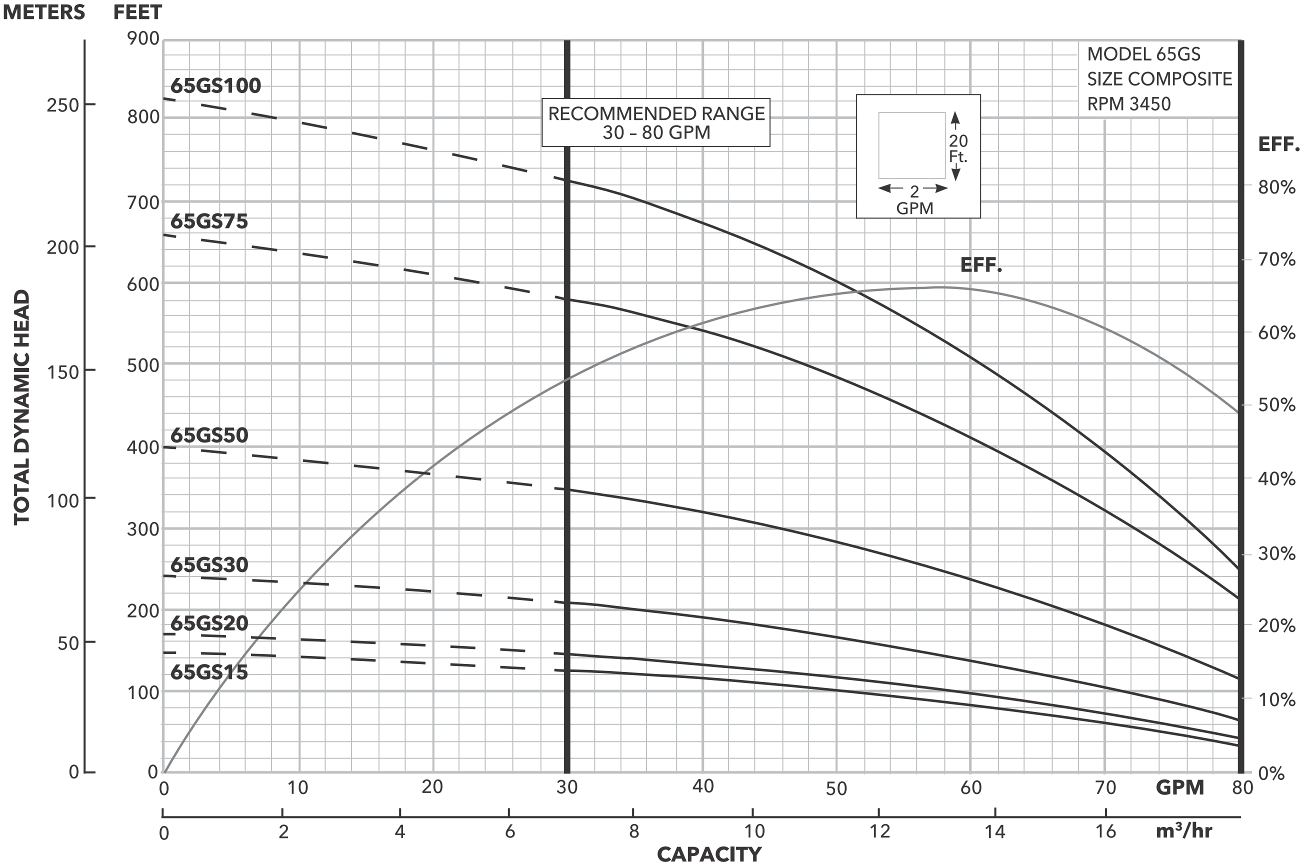

Model 85GS

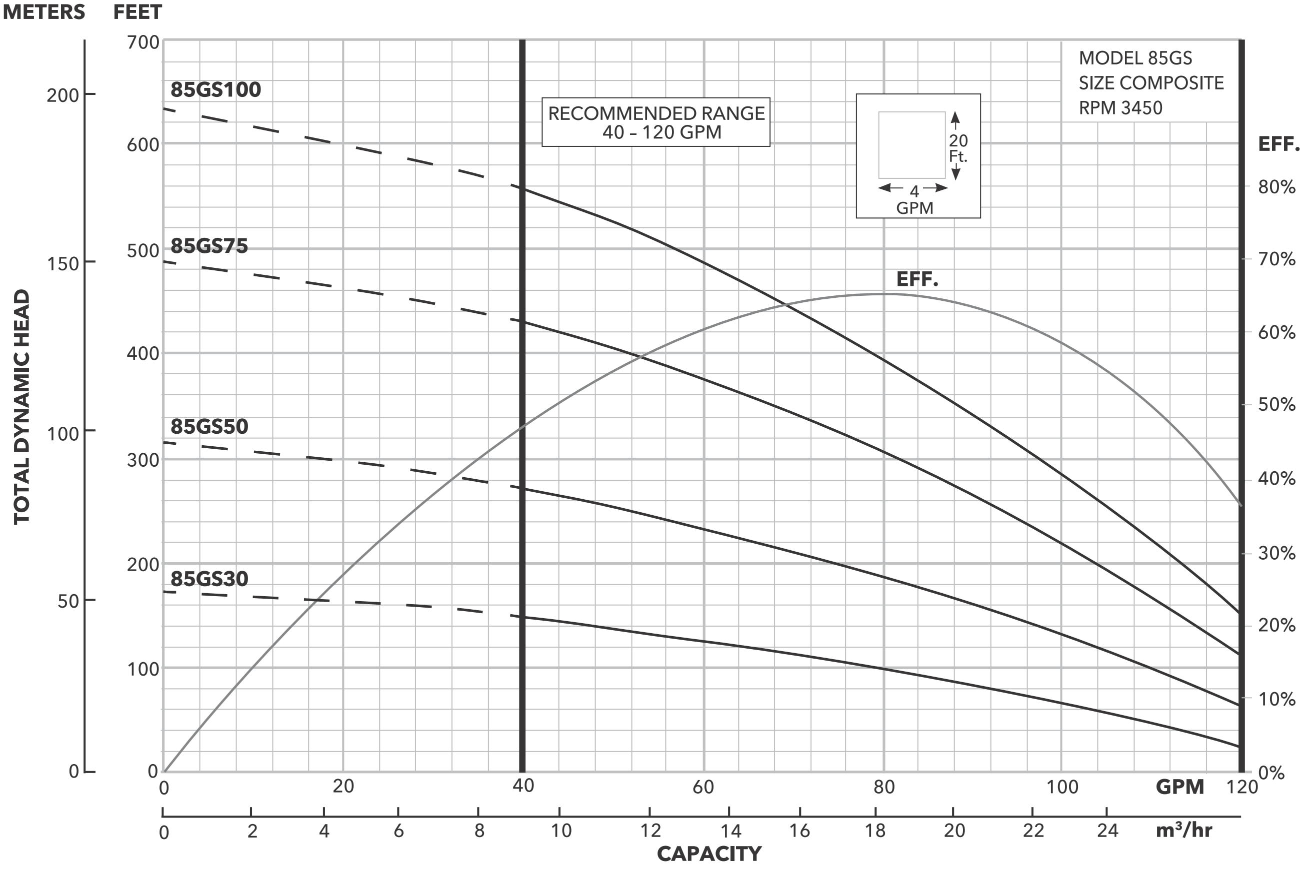

MODEL 35GS

SELECTION CHART

Horsepower Range 1 – 3, Recommended Range 10 – 50 GPM, 60 Hz, 3450 RPM

Pump Model	HP	PSI	Depth to Water in Feet/Ratings in GPM (Gallons per Minute)																										
			20	40	60	80	100	120	140	160	180	200	220	240	260	280	300	320	340	360	380	400	420	440	460	480	520	560	600
35GS10	1	0		49	46	42	38	33	26	15																			
		20	44	40	36	31	23	11																					
		30	40	36	30	22																							
		40	35	29	20																								
		50	28	18																									
		60	16																										
Shut-off PSI			69	60	52	43	34	26	17	8																			
35GS15	1½	0			48	46	43	40	37	33	29	23	14																
		20	47	45	43	39	36	32	28	21	10																		
		30	45	42	39	35	32	27	19																				
		40	42	38	35	31	26	18																					
		50	38	34	30	25	16																						
		60	34	29	24	15																							
Shut-off PSI			97	88	79	71	62	53	45	36	27	19	10																
35GS20	2	0			50	48	46	44	42	39	37	34	30	26	20	12													
		20	49	47	45	43	41	38	36	33	29	24	17																
		30	47	45	43	40	38	35	32	28	23	16																	
		40	44	42	40	38	35	32	27	22	15																		
		50	42	40	37	34	31	27	21	14																			
		60	39	37	34	30	26	20	12																				
Shut-off PSI			123	114	105	97	88	79	71	62	53	45	36	27	19	10													
35GS30	3	0				50	48	47	45	44	42	41	39	38	36	34	31	28	25	21	16	10							
		20		49	48	46	45	43	42	40	39	37	35	33	30	27	24	19	14										
		30	49	47	46	45	43	42	40	39	37	35	33	30	27	23	18	13											
		40	47	46	44	43	41	40	38	37	35	32	30	26	22	18	12												
		50	46	44	43	41	40	38	36	34	32	29	26	22	17	11													
		60	44	42	41	39	38	36	34	31	29	25	21	16	10														
Shut-off PSI			176	168	159	150	142	133	124	116	107	98	90	81	72	64	55	46	38	29	20	12							

Horsepower Range 5-10, Recommended Range 10 – 50 GPM, 60 Hz, 3450 RPM

Pump Model	HP	PSI	Depth to Water in Feet/Ratings in GPM (Gallons per Minute)																										
			50	100	150	200	250	300	350	400	450	500	550	600	650	700	750	800	850	900	950	1000	1050	1100	1150	1200	1250	1300	1350
35GS50	5	0			50	48	46	43	41	38	35	31	26	19	11														
		20		50	48	46	44	41	38	35	31	26	20	12															
		30		49	47	45	42	40	37	33	29	24	16																
		40	50	48	46	44	41	38	35	31	27	20	12																
		50	49	47	45	43	40	37	34	29	24	17																	
			48	46	44	41	39	35	32	27	21	13																	
Shut-off PSI			280	259	237	215	194	172	150	129	107	85	64	42															
35GS75	7½	0					50	48	47	46	44	43	41	39	37	35	33	30	27	24	19	14							
		20				50	49	47	46	44	43	41	39	37	35	33	31	28	24	20	14								
		30			50	49	48	47	45	44	42	40	38	37	34	32	29	26	22	17	12								
		40			50	49	47	46	44	43	41	39	38	36	33	31	28	24	20	15									
		50		50	49	48	47	45	44	42	40	39	37	35	32	30	26	22	18	12									
				50	49	47	46	45	43	41	40	38	36	34	31	28	25	20	15										
Shut-off PSI			453	431	410	388	366	345	323	301	280	258	236	215	193	171	150	128	106	85	63	42							
35GS100	10	0							49	48	47	46	45	44	42	41	40	38	37	35	33	31	29	26	24	20	16	11	
		20						49	48	47	46	45	44	42	41	40	38	37	35	33	31	29	27	24	20	16	12		
		30						49	48	47	45	44	43	42	40	39	38	36	34	32	30	28	25	22	19	14			
		40					49	48	47	46	45	44	43	41	40	38	37	35	34	32	29	27	24	21	17	12			
		50					49	48	47	46	44	43	42	41	39	38	36	34	33	31	28	26	23	19	15	10			
						49	48	47	46	45	44	43	41	40	39	37	35	34	32	30	27	24	21	17	13				
Shut-off PSI			583	561	540	518	496	475	453	431	410	388	366	345	323	302	280	258	237	215	193	172	150	128	107	85	63	42	

MODEL 45GS

SELECTION CHART

Horsepower Range 1½ – 5, Recommended Range 20 – 65 GPM, 60 Hz, 3450 RPM

Pump Model	HP	PSI	Depth to Water in Feet/Ratings in GPM (Gallons per Minute)																									
			20	40	60	80	100	120	140	160	180	200	220	240	260	280	300	320	340	360	380	400	440	480	520	560	600	640
45GS15	1½	0	64	61	57	52	46	37	23																			
		20	55	50	44	34																						
		30	49	43	32																							
		40	41	30																								
		50	27																									
		60																										
Shut-off PSI			61	52	44	35	26	18	9																			
45GS20	2	0		62	60	57	53	49	45	40	32																	
		20	59	56	52	48	43	38	28																			
		30	55	51	47	43	36	26																				
		40	51	47	42	35	25																					
		50	46	41	34	22																						
		60	40	46	37	38	28	29																				
Shut-off PSI			88	80	71	63	54	45	37	28	19																	
45GS30	3	0		65	62	60	59	56	53	50	47	45	41	37	30	21												
		20	62	60	58	55	52	49	47	44	40	35	28															
		30	60	58	55	52	49	46	43	39	34	26																
		40	57	54	51	49	46	42	38	33	25																	
		50	54	51	48	45	42	38	32	23																		
		60	51	48	45	41	37	31	22																			
Shut-off PSI			130	121	113	104	95	87	78	69	61	52	43	35	26	17												
45GS50	5	0				65	63	62	61	60	59	58	56	55	53	51	50	48	46	44	42	39	32	22				
		20		64	63	61	60	59	58	57	56	54	53	51	49	47	46	43	41	38	35	31	20					
		30	64	62	61	60	59	58	57	55	54	52	51	49	47	45	43	41	38	34	30	25						
		40	62	61	60	59	58	57	55	54	52	50	49	47	45	43	40	37	33	29	24							
		50	61	60	59	58	56	55	53	52	50	48	47	45	42	40	37	33	28	23								
		60	60	59	58	56	55	53	52	50	48	46	44	42	39	36	32	28	22									
Shut-off PSI			228	220	211	202	194	185	176	168	159	150	142	133	124	116	107	98	90	81	72	64	46	29				

Horsepower Range 7½ – 10, Recommended Range 20-65 GPM, 3450 RPM

Pump Model	HP	PSI	Depth to Water in Feet/Ratings in GPM (Gallons per Minute)																									
			40	80	120	160	200	240	280	320	360	400	440	480	520	560	600	640	680	720	760	800	840	880	920	960	1000	1040
45GS75	7½	0					63	62	60	58	56	53	51	48	46	43	39	34	28	21								
		20				63	61	60	57	55	53	50	48	45	42	38	33	27	19									
		30			64	62	60	58	56	54	51	49	46	43	40	35	30	23										
		40		65	63	61	59	57	55	52	50	47	45	41	37	32	26											
		50		64	62	60	58	56	54	51	49	46	43	39	35	29	21											
		60	65	63	61	59	57	55	52	50	47	44	41	37	31	25												
Shut-off PSI			332	315	298	280	263	246	228	211	194	177	159	142	125	107	90	73	55	38								
45GS100	10	0				65	64	63	61	60	58	57	55	54	53	51	50	48	46	44	42	39	36	32	28	23		
		20			65	64	63	61	60	58	57	55	54	52	51	49	48	46	44	42	39	36	32	27	22			
		30		65	64	63	62	60	59	57	56	54	53	52	50	49	47	45	43	40	37	33	29	24				
		40		65	64	62	61	60	58	56	55	54	52	51	49	48	46	44	41	38	35	31	26	21				
		50	65	64	63	62	60	59	57	56	54	53	51	50	48	47	45	42	40	36	33	28	23					
		60	65	64	62	61	59	58	56	55	53	52	50	49	47	45	43	41	38	34	30	26	20					
Shut-off PSI			456	439	422	404	387	370	353	335	318	301	283	266	249	231	214	197	179	162	145	127	110	93	75	58		

MODEL 65GS

SELECTION CHART

Horsepower Range 1½ – 5, Recommended Range 30 – 80 GPM, 60 Hz, 3450 RPM

Pump Model	HP	PSI	Depth to Water in Feet/Ratings in GPM (Gallons per Minute)																					
			20	40	60	80	100	120	140	160	180	200	220	240	260	280	300	320	340	360	380	400	440	480
65GS15	**1½**	**0**		78	70	61	51	36																
		20	68	58	47	30																		
		30	57	45																				
		40	42																					
		50																						
		60																						
Shut-off PSI			55	46	38	29	20	12																
65GS20	**2**	**0**		81	74	67	59	48	35															
		20	72	64	56	45	30																	
		30	63	54	43																			
		40	53	41																				
		50	39																					
		60																						
Shut-off PSI			65	56	48	39	30	22	13															
65GS30	**3**	**0**			81	76	71	66	59	53	45	35												
		20	80	75	69	64	57	51	42	32														
		30	74	69	63	56	49	41	30															
		40	68	62	55	48	39																	
		50	61	54	47	38																		
		60	53	46	36																			
Shut-off PSI			96	87	79	70	61	53	44	35	27	18												
65GS50	**5**	**0**						80	77	73	70	67	63	59	55	50	45	39	32					
		20				79	76	72	69	66	62	58	54	49	44	37	30							
		30			78	75	72	69	65	61	57	53	48	43	36									
		40		78	75	71	68	64	61	57	52	47	42	35										
		50	77	74	71	67	64	60	56	52	47	41	34											
		60	74	70	67	63	59	55	51	46	40	33												
Shut-off PSI			164	155	147	138	129	121	112	103	95	86	77	69	60	51	43	34	26					

Horsepower Range 7½ – 10, Recommended Range 30 – 80 GPM, 60 Hz, 3450 RPM

Pump Model	HP	PSI	Depth to Water in Feet/Ratings in GPM (Gallons per Minute)																					
			40	80	120	160	200	240	280	320	360	400	440	480	520	560	600	640	680	720	760	800	840	880
65GS75	**7½**	**0**						78	74	70	66	61	56	50	44	35								
		20				80	77	73	69	65	60	55	50	42	33									
		30				79	75	71	67	62	57	52	46	38										
		40			80	77	73	69	64	60	54	49	41	32										
		50			78	75	70	66	62	57	51	45	36											
		60		79	76	72	68	64	59	54	48	40	30											
Shut-off PSI			268	251	233	216	199	181	164	147	129	112	95	77	60	43								
65GS100	**10**	**0**						80	78	75	72	69	66	62	58	54	50	45	39	31				
		20					80	78	75	72	69	65	62	58	54	49	44	37	30					
		30					79	76	73	70	67	63	59	55	51	46	40	33						
		40				80	77	74	71	68	65	61	57	53	48	43	36							
		50				78	76	73	69	66	63	59	55	50	45	39	32							
		60			79	77	74	71	68	64	60	57	52	48	42	35								
Shut-off PSI			339	322	305	288	270	253	236	218	201	184	166	149	132	114	97	80	62	45				

APPENDIX V

CLASSIC - SINGLE HEAD ADJUSTABLE SPECIFICATIONS

STENNER PUMPS®

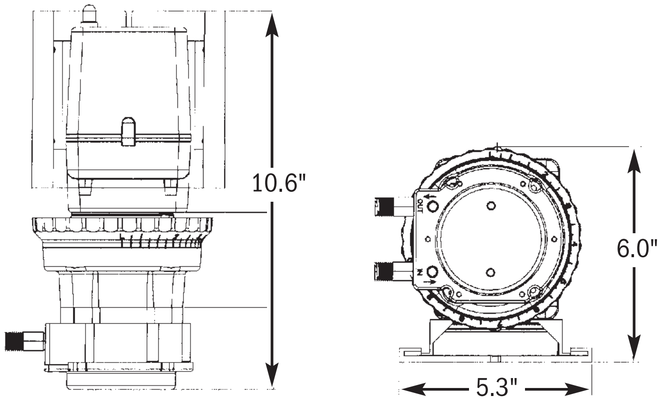

SHIPPING WEIGHT 9 lbs (4 kg)

METERING PUMP
LISTED
96FO

METERING PUMP
LR79585
C US

IPX4

THIS PUMP IS TESTED AND CERTIFIED BY WQA ACCORDING TO NSF/ANSI 61 FOR CONTACT WITH SODIUM HYPOCHLORITE AND WATER ONLY AND NSF/ANSI 372.
C USA

Intertek
94247
CONFORMS TO ANSI/NSF STD. 50
Equipment for swimming pools, spas, hot tubs and other recreational water facilities.

Agency listings vary by model. Contact factory for details.

FEATURES

- 3-point roller design assists in anti-siphon protection
- Pump head requires no valves, allows for easy maintenance
- Self-priming against maximum working pressure, foot valve not required
- Pump does not lose prime or vapor lock
- Pumps off-gassing solutions and can run dry
- Output volume is not affected by back pressure
- Injection check valve included with models rated 100 psi (6.9 bar) maximum
- Easy to change pump tube; lubrication is not required
- Pump tubes and pump heads interchange between models
- Models (Santoprene® only) tested by Water Quality Association to conform to ANSI/NSF STD 61
- Adjustable models (Santoprene® only) tested by ETL to conform to ANSI/NSF STD 50

CLASSIC - SINGLE HEAD ADJUSTABLE SPECIFICATIONS

STENNER PUMPS®

OUTPUT CONTROL

Adjustable models only, external dial ring adjustment from 5%-100% in 2.5% increments

MAXIMUM WORKING PRESSURE

100 psi (6.9 bar) 45MHP2, 45MHP10, 45MHP22, 85MHP5, 85MHP17, 85MHP40

25 psi (1.7 bar) 45M1, 45M2, 45M3, 45M4, 45M5, 85M1, 85M2, 85M3, 85M4, 85M5

MAXIMUM OPERATING TEMPERATURE

125° F (52° C)

MAXIMUM SUCTION LIFT

25 ft (7.6 m) vertical lift, based on water

MOTOR TYPE

1/30 HP, shaded pole, class B

APPROXIMATE GEAR MOTOR RPM

26

DUTY CYCLE

Continuous

MOTOR VOLTAGE (AMP DRAW)

120V 60Hz 1PH (1.7)
220V 60Hz 1PH (0.9)
230V 50Hz 1PH (0.9) *International*
250V 50Hz 1PH (0.9) *International*

POWER CORD TYPE

SJTOW

POWER CORD PLUG END

120V 60Hz NEMA 5/15
220V 60Hz NEMA 6/15
230V 50Hz CEE 7/VII
250V 50Hz CEE 7/VII

MATERIALS OF CONSTRUCTION

All Housings Polycarbonate

Pump Tube
Santoprene®[*], FDA approved or Versilon®[**]

Check Valve Duckbill
Santoprene®[*], FDA approved or Pellethane®[†]

Pump Head Rollers Polyethylene

Roller Bushings Oil impregnated bronze

Suction/Discharge Tubing, Ferrules
Polyethylene, FDA approved

Tube and Injection Fittings
PVC or Polypropylene, NSF listed

Check Valve Fittings
Type 1 Rigid PVC, NSF listed

Connecting Nuts PVC, NSF Listed

3/8" Adapter PVC or Polypropylene, NSF listed

Suction Line Strainer
PVC, NSF listed, with ceramic weight

All Fasteners Stainless steel

Pump Head Latches Polypropylene

ACCESSORY KIT SHIPPED WITH EACH PUMP

3 connecting nuts 1/4" or 3/8"
3 ferrules 1/4" or 6 mm *Europe*
1 injection check valve 100 psi (6.9 bar)
OR 1 injection fitting 25 psi (1.7 bar)
1 weighted suction line strainer
1/4", 3/8" or 6 mm *Europe*
1 20' roll suction/discharge tubing
1/4" or 3/8", white or UV black
OR 6 mm white *Europe*
1 additional pump tube
2 additional latches
1 mounting bracket
1 manual

[*] Santoprene® is a registered trademark of Exxon Mobil Corporation.

[**] Versilon® is a registered trademark of Saint-Gobain Performance Plastics.

[†] Pellethane® is a registered trademark of Lubrizol Advanced Materials, Inc.

45 Series – Adjustable Output Pump

			Approximate Output @ 60Hz						Approximate Output @ 50Hz		
Single Head Model	Maximum Pressure	Pump Tube Number	Gallons per Day	Liters per Day	Gallons per Hour	Liters per Hour	Ounces per Minute	Milliliters per Minute	Liters per Day	Liters per Hour	Milliliters per Minute
45MHP2[*] **45M1**	100 psi (6.9 bar) max. 25 psi (1.7 bar) max.	#1 #1	0.2 to 3.0	0.8 to 11.4	0.01 to 0.13	0.03 to 0.48	0.02 to 0.27	0.56 to 7.92	0.6 to 9.1	0.03 to 0.38	0.31 to 6.32
45MHP10[*] **45M2**	100 psi (6.9 bar) max. 25 psi (1.7 bar) max.	#2 #2	0.5 to 10.0	1.9 to 37.9	0.02 to 0.42	0.08 to 1.58	0.04 to 0.89	1.32 to 26.32	1.5 to 30.3	0.06 to 1.26	1.04 to 21.04
45MHP22[*] **45M3**	100 psi (6.9 bar) max. 25 psi (1.7 bar) max.	#7 #3	1.1 to 22.0	4.2 to 83.3	0.05 to 0.92	0.18 to 3.47	0.10 to 1.96	2.92 to 57.85	3.3 to 66.6	0.14 to 2.78	2.29 to 46.25
45M4	25 psi (1.7 bar) max.	#4	1.7 to 35.0	6.4 to 132.5	0.07 to 1.46	0.27 to 5.52	0.15 to 3.11	4.44 to 92.01	5.1 to 106.0	0.21 to 4.42	3.54 to 73.61
45M5	25 psi (1.7 bar) max.	#5	2.5 to 50.0	9.5 to 189.3	0.10 to 2.08	0.40 to 7.89	0.22 to 4.44	6.60 to 131.43	7.6 to 151.4	0.32 to 6.31	5.28 to 105.14

85 Series – Adjustable Output Pump

			Approximate Output @ 60Hz						Approximate Output @ 50Hz		
Single Head Model	Maximum Pressure	Pump Tube Number	Gallons per Day	Liters per Day	Gallons per Hour	Liters per Hour	Ounces per Minute	Milliliters per Minute	Liters per Day	Liters per Hour	Milliliters per Minute
85MHP5[*] **85M1**	100 psi (6.9 bar) max. 25 psi (1.7 bar) max.	#1 #1	0.3 to 5.0	1.1 to 18.9	0.01 to 0.21	0.05 to 0.79	0.03 to 0.44	0.76 to 13.13	0.9 to 15.1	0.04 to 0.63	0.52 to 10.49
85MHP17[*] **85M2**	100 psi (6.9 bar) max. 25 psi (1.7 bar) max.	#2 #2	0.8 to 17.0	3.0 to 64.4	0.03 to 0.71	0.13 to 2.68	0.07 to 1.51	2.08 to 44.65	2.4 to 51.5	0.10 to 2.15	1.67 to 35.76
85MHP40[*] **85M3**	100 psi (6.9 bar) max. 25 psi (1.7 bar) max.	#7 #3	2.0 to 40.0	7.6 to 151.4	0.08 to 1.67	0.32 to 6.31	0.18 to 3.55	5.27 to 105.14	6.1 to 121.1	0.25 to 5.05	4.24 to 84.10
85M4	25 psi (1.7 bar) max.	#4	3.0 to 60.0	11.4 to 227.1	0.13 to 2.50	0.48 to 9.46	0.27 to 5.33	7.92 to 157.71	9.1 to 181.7	0.38 to 7.57	6.32 to 126.18
85M5	25 psi (1.7 bar) max.	#5	4.3 to 85.0	16.3 to 321.8	0.18 to 3.54	0.68 to 13.40	0.38 to 7.55	11.32 to 223.40	13.0 to 257.4	0.54 to 10.73	9.03 to 178.75

[*]Injection check valve included with pumps rated 100 psi (6.9 bar) maximum.

NOTICE: The information within this chart is solely intended for use as a guide. The output data is an approximation based on pumping water under a controlled testing environment. Many variables can affect the output of the pump. Stenner Pump Company recommends that all metering pumps undergo field calibration by means of analytical testing to confirm their outputs. The information contained in this flyer is not intended for specific application purposes. Stenner Pump Company reserves the right to make changes to prices, products, and specifications at any time without prior notice.

PCM - SPECIFICATIONS

STENNER PUMPS®

Front

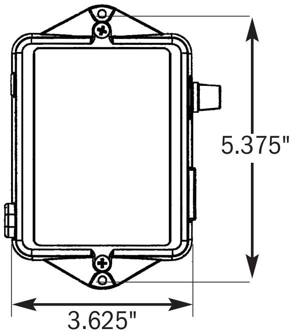

Top

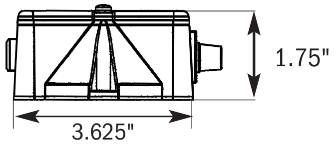

Side

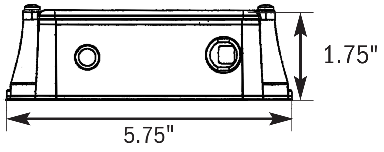

SHIPPING WEIGHT 2 lbs (0.9 kg)

The Pump Control Module (PCM) is a time adjusted controller that powers the pump. A pulsing flow meter sends a signal to the PCM which actuates the pump to deliver the desired dose based upon water volume. The PCM has a locking feature on the adjustment knob.

TIME RANGE IN SECONDS

PCM1: 0.1–1.0

PCM5: 0.5–5.0

PCM10: 1.0–10.0

PCM20: 2.0–20.0

NOTE: The time range can be changed by adjusting the internal jumper setting as indicated above.

INTERCHANGEABLE TIME RANGE SETTINGS

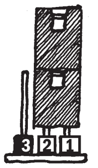

0.1–1 second
(Jumper 2 & 1)

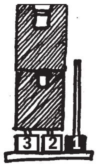

0.5–5 seconds
(Jumper 3 & 2)

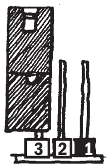

1–10 seconds
(Jumper 3)

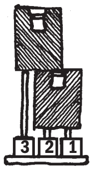

2–20 seconds
(Jumper 3 & 2, 2 & 1)

Timer Microcontroller with triac output

Turndown Ratio 10:1

Input Signal Non-voltage dry contact, water meter

Reset Time Immediate

Minimum Signal Durations 10 milliseconds

Input Electrical 120V 60Hz

No Load Current 0.45mA AC maximum

Output Electrical Maximum device load, 1.8 amp at 120V

Housing Material Polycarbonate plastic

BOX Dimensions L x W x H 8 x 8 x 6 in. (20.3 x 20.3 x 15.2 cm)

SSM® SERIES METERS

NSF / ANSI 372

SSM® METER

SSMRS® METER

The SSM® series have stainless steel meter bodies, tested and certified to NSF/ANSI 372 for lead free compliance and meet or exceed AWWA specifications. The SSM® Multi-Jet meter has a long meter life and good tolerance to contaminants. The series is well suited for industrial, commercial and residential applications. The dry sealed registers are easy to read and will retain their clear view display. The SSM® series meter is available in sizes from ⅝" x ½" to 2" with maximum flow rates up to 160 GPM and pressures up to 150 psi. Registrations are available in gallons, cubic feet, or liters/cubic meters.

The SSM® meter is a totalizing multi-jet meter for those applications that only need to read the totalized flow at the meter. The SSMRS® which is equipped with a reed switch for a dry contact electrical output.

CARLON METER

1710 EATON DRIVE • GRAND HAVEN, MICHIGAN 49417
PHONE (616) 842-0420 • FAX (616) 842-1265
E-MAIL CARLON@CARLONMETER.COM • WEBSITE WWW.CARLONMETER.COM

METER SELECTION CHART

METER / PIPE SIZE	MODEL	*CONTINUOUS FLOW	FLOW RANGE	WEIGHT	LENGTH	HEIGHT	WIDTH	CONNECTION LENGTH (X2)
⅝" X ½"	625SSM	8 GPM	¼ - 20 GPM	3.3 lbs.	7 ½"	4 ¼"	3 ⅝"	2"
⅝" X ¾"	6251SSM	10 GPM	¼ - 20 GPM	3.3 lbs.	7 ½"	4 ¼"	3 ⅝"	2"
¾" X ¾"	750SSM	15 GPM	½ - 30 GPM	3.4 lbs.	7 ½"	4 ⅝"	3 ⅞"	2"
1"	1000SSM	25 GPM	¾ - 50 GPM	5.7 lbs.	10 ¼"	4 ⅝"	3 ⅞"	2 ¼"
1½"	150SSM	50 GPM	2 - 100 GPM	10.6 lbs.	11 ⅞"	5 ½"	4 ⅞"	2 ½"
2"	200SSM	80 GPM	2 - 160 GPM	13 lbs.	11 ⅞"	5 ½"	4 ⅞"	2 ¾"

***Continuous Flow:** The size of meter selected should be based upon continuous flow, GPM, as opposed to pipe size. For example, if it is determined that continuous flow is 25 GPM, a 1" meter should be selected rather than a ¾" meter.

ORDERING INFORMATION: Select the meter model number from the Meter Selection Chart above.
Add a **G** for Gallon reading or a **C** for Cubic Feet reading or an **L** for Liters reading.
Example: 1½" Meter with Cubic Feet register = 150SSMC.

X = AVAILABLE CONTACT SETTINGS

(All contact settings are pre-set at the factory to your specification)

GPC = Gallons Per Contact • LPC = Liters Per Contact • CFPC = Cubic Feet Per Contact

METER / PIPE SIZE	MODEL	0.1 GPC	1 GPC	10 GPC	100 GPC	.01 CFPC	0.1 CFPC	1 CFPC	10 CFPC	1 LPC	10 LPC	100 LPC	1000 LPC
⅝" X ½"	625SSMRS	X	X	X	X	X	X	X	X	X	X	X	X
⅝" X ¾"	6251SSMRS	X	X	X	X	X	X	X	X	X	X	X	X
¾" X ¾"	750SSMRS	X	X	X	X	N/A	X	X	X	N/A	X	X	X
1"	1000SSMRS	X	X	X	X	N/A	X	X	X	N/A	X	X	X
1½"	150SSMRS	N/A	X	X	X	N/A	X	X	X	N/A	X	X	X
2"	200SSMRS	N/A	X	X	X	N/A	X	X	X	N/A	X	X	X

SSM® METER SPECIFICATIONS

Reed Switch:	Dry contact type, normally open, 24V, 100mA maximum
Pressure Rating:	Maximum 150 psi.
Temperature Range:	35° - 122°F. Protect the meter from freezing.
PH Level Range:	6.5 – 8.0
Accuracy:	+/- 1.5% of maximum flow when operating between minimum and maximum flow range.
Register Options:	U.S. Gallons, Cubic Feet, and Metric.

Installation Instructions:

1. Flush the line thoroughly after all plumbing changes to prevent contaminates from entering the meter.
2. Install horizontally with the register facing up and inlet port facing the water supply line.
3. For outdoor installation, protect meter from direct exposure to the elements.
4. Protect meter from backflow of water opposite of indicted flow direction.

Helpful Hints:

- Install a Carlon Slow-Closing Valve downstream of your water meter. This will eliminate possible meter damage from water hammer in your system.
- Install a Carlon Strainer upstream of your water meter to protect the meter and any other in-line process equipment from becoming jammed by particulate matter in your system.

Warranty: Carlon Meter, Inc. warrants its products to be free of defect in material or workmanship for a period of twelve months from the date of purchase. Contact us to obtain a copy of our complete statement of warranty.

Visit us online at www.carlonmeter.com for additional information

COUNTRY OF ORIGIN ★USA★

Snyder® Open-Top Tanks

- **Durable 1.9 specific gravity HDLPE for more aggressive chemicals**
- **Complies with FDA regulation 177.1520; NSF/ANSI 61 certified**

Snyder's extremely durable open-top tanks are made from 100% HDLPE, ensuring optimal rigidity and long life. They feature permanent gallon and liter indication marks that are molded into the surface.

Ordering info: Factory installed fittings can be ordered with your tank. Contact USABlueBook for more information.

Includes: tank lid. Optional tank stands are available.

Note: Contact USABlueBook if using with chemicals at 100°F or above. Chemical compatibility may vary.

Shipping: Ships motor freight.

Extremely durable open-top tanks are made from 100% HDLPE

Specific gravity:	1.9
Materials of construction	
Opaque (sodium hypochlorite):	high-density linear polyethylene (HDLPE) with #880059 resin
Translucent (sulfuric acid):	high-density linear polyethylene (HDLPE) with #880046 resin
Translucent (general purpose):	high-density linear polyethylene (HDLPE)

Certified to NSF/ANSI 61

SHIPS MOTOR FREIGHT

Selected sizes in stock and ready to ship!

Tanks suitable for use with:

Opaque (sodium hypochlorite): 16.5% sodium hypochlorite (indoor and outdoor storage); **Translucent (sulfuric acid):** 98% sulfuric acid; **Translucent (general purpose):** 6% aluminum sulfate (alum), 40% ammonium sulfate, 60% ferric sulfate, 26% fluoride, 37% hydrochloric acid, 50% hydrogen peroxide, methanol, 50% sodium hydroxide (caustic), 16.5% sodium hypochlorite (indoor storage only). **Call us with questions about compatibility with any chemicals not on this list!**

		OPAQUE TANKS (SODIUM HYPOCHLORITE)*		TRANSLUCENT TANKS (SULFURIC ACID)		TRANSLUCENT TANKS (GENERAL PURPOSE)	
CAPACITY (GALLONS)	DIMENSIONS (DIA x H)	STOCK #	EACH	STOCK #	EACH	STOCK #	EACH
30	22" x 31"	38745**	$	38746	$	38744	$
55	26" x 37"	41031**		26361		27932**	
90	34" x 36"	41032		26362		27933**	
120	34" x 47"	41033		26363		27934**	
150	34" x 57"	41034		26364		27935**	
200	40" x 53"	41035		26365		27936**	
250	40" x 65"	41036		26366		27937**	
275	47" x 53"	41037		26367		27938	
330	47" x 63"	41038		26368		27939	
360	53" x 53"	41039		26369		27940	
440	53" x 64"	41040		26370		27941	
500	53" x 72"	41041		26371		27942	

***Sodium Hypochlorite tanks not NSF/ANSI 61 certified.** ****These models are usually kept in stock at USABlueBook.**

Optional Tank Stands

Stands are made from heavy-duty corrosion-proof plastic. Choose from models that elevate tanks either 12" or 18" off the floor. Stands can be easily lifted with a forklift.

	12" HIGH		18" HIGH	
FIT TANK CAPACITY	STOCK #	EACH	STOCK #	EACH
30 & 55 Gallons	27086	$	27091	$
90, 120 & 150 Gallons	27087		27092	
200 & 250 Gallons	27088		27093	
275 & 330 Gallons	27089		27094	
360, 440 & 500 Gallons	27090		27095	

Optional Mixer Mount

Use with all tank stands listed above.

DESCRIPTION	STOCK #	EACH
Mixer Mount	27096	$

Tank stand shown with optional mixer mount.

Optional Tank Stands

APPENDIX VI

AQUASTORE®

Glass Tanks with a Heart of Steel™

Glass Tanks with a Heart of Steel™

Not All Liquid Storage Tanks Are Created Equal

CST Storage (CST) has a long and storied history of turning raw steel into the finest storage tanks available.

Our unique glass-fused-to-steel technology was introduced more than 50 years ago for dry bulk agricultural applications. Today, CST is dedicated to the design, fabrication and installation of glass-fused-to-steel sectional tanks. More than 100,000 glass-fused-to-steel tanks have been installed in over 70 countries around the world.

The glass-fused-to-steel technology was introduced to the liquid storage market in the mid-1970's as "Aquastore®." After more than 30 years of proven performance, Aquastore tanks have become the preferred choice for potable water storage and many other liquid applications. With tens of thousands of satisfied customers, Aquastore tanks are "engineered" to be the very best.

Glass-fused-to-steel has become the premium water and liquid storage technology leader. Aquastore owners choose glass-fused-to-steel technology over other tank designs for several reasons:

- **Lowest maintenance requirements over tank life**
- **Greater lifetime value versus welded or concrete tanks**
- **Faster construction – Easy assembly without cranes or special equipment**
- **Expandable to accommodate future requirements**
- **Available in diameters from 11 feet (3.3 m) to 204 feet (62.2 m) and capacity from 20,000 gallons (75 cu m) to over 6 million gallons (22,700 cu m)**
- **Specific tank designs, options and accessories to meet customer needs**

CST designs and manufactures a wide range of tanks in an ISO 9001:2000 certified facility to meet a wide range of standards, including AWWA D103 – Bolted Steel Water Storage Tanks, AISC, IBC, NBCC, FM and NFPA Standard 22.

An Aquastore tank means assurance.

Assurance you will receive the highest engineered quality, best service, **longest product life and greatest value** in liquid storage tanks.

▲ *Sludge stabilization and sludge storage facility.*

▲ *Multiple potable ground storage tank facility.*

Assurance

▲ *Holiday testing.*

Glass-Fused-to-Steel

Factory "Engineered" Technology

Glass-fused-to-steel is the premium technology in the tank market. Glass coating's physical properties are specially suited to municipal and industrial storage applications. The factory-applied silica glass coating on Aquastore tanks forms a hard, inert barrier for both the interior and exterior tank surfaces to guard against weather and corrosion. Glass-fused-to-steel is impermeable to liquids and vapors, controls undercutting caused by corrosion and offers excellent impact and abrasion resistance. The color won't fade or chalk and most graffiti can easily be removed. **It never needs painting!**

A multi-step process is the heart of the glass-fused-to-steel technology system

- Fabricated sheets are grit blasted to a uniform, near white surface
- Proprietary formulations of borosilicate, minerals, water and clays are blended into a sprayable slurry called "slip"
- After inspection, the slurry is fused to the steel sheets at temperatures above 1,500° F (815° C) to produce the distinctive glossy Aquastore glass finish
- The molten glass reacts with the profiled steel surface to form an inert, inorganic chemical and mechanical bond

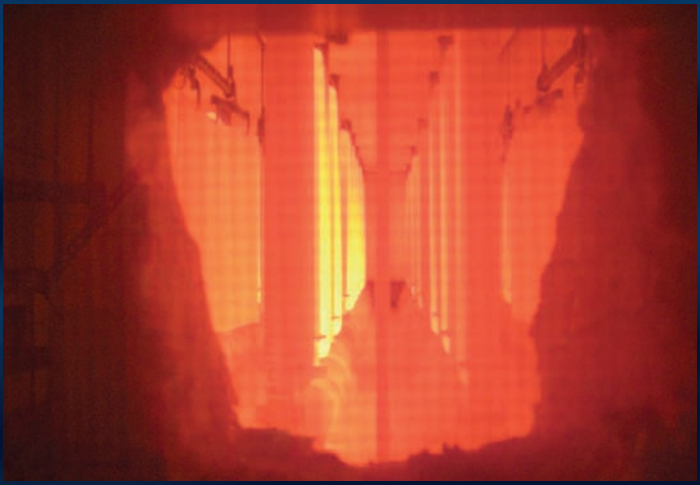

▲

State-of-the-art porcelain enameling furnace installed in 2006.

A new, state-of-the-art porcelain enameling furnace was installed at CST in 2006. The world's largest and highest efficiency porcelain enamel furnace, it improves quality, saves energy, increases production and speeds delivery of glass-fused-to-steel products to customers. In all, five advanced temperature control zones regulate the coating process to produce extremely high quality sheets every time.

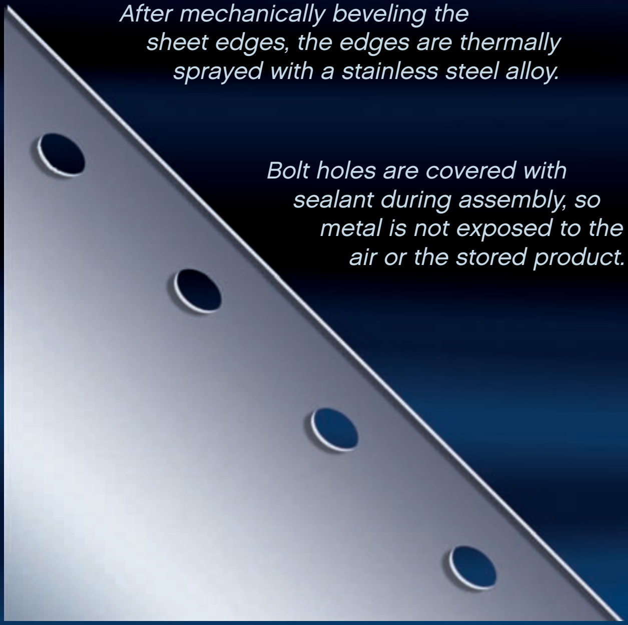

After mechanically beveling the sheet edges, the edges are thermally sprayed with a stainless steel alloy.

Bolt holes are covered with sealant during assembly, so metal is not exposed to the air or the stored product.

Edgecoat® Protection

CST's proprietary Edgecoat® process thermally sprays the sheet edge with a protective stainless steel alloy before the glass finish is applied to the entire sheet for maximum protection.

▲

Glass-fused-to-steel panels on the production line.

Peace of Mind

Vitrium Technology

CST's unending commitment to product improvement has resulted in the development of CST's newest glass innovation – Vitrium™. This coating combines the outstanding chemical and physical resistant properties of titanium-enhanced glass with a highly engineered, ultra-fine glass bubble structure. This process results in high performance glass-fused-to-steel technology. Vitrium features and benefits include:

- Tough TiO_2 glass formulations provide longer life
- Electrostatic base coat application ensures consistent quality
- Maximum coating effectiveness without requiring increased coating thickness
- Unique process technologies provide factory certified "holiday-free" sheets
- Process efficiencies lead to competitive pricing
- Ideal for both cold and hot climates

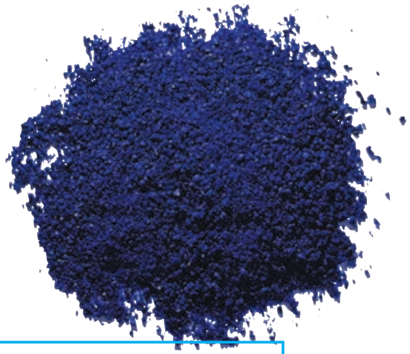

▶ *Glass frit is specially formulated to produce the distinctive cobalt blue Aquastore glass coating.*

Physical Properties – Glass-Fused-to-Steel Vitrium Technology

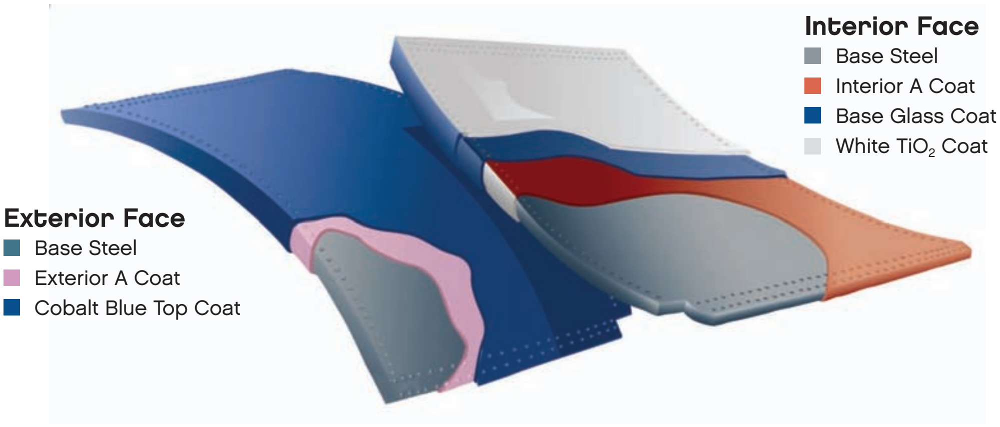

Inside Sheet Color	White
Outside Sheet Color	Cobalt Blue, Desert Tan, Forest Green, Sky Blue, White
Nominal Thickness	**Interior:** 10-18 mils, 260-460 microns **Exterior:** 7-15 mils, 180-380 microns
Service Range	140° F (60° C) @ 2-11 pH-subject to verification, depending on specific products stored
Abrasion Resistance	Taber-8 mg loss (CS-17, 100g, 100 cycles)
Elasticity	Young's Modulus 12 x 10^6
Permeability	Impermeable to gases and liquids within normal operating temperature ranges
Thermal Conductivity	20.4 BTU in/hr ft^2 °F
Cleanability	Smooth, inert, glossy, anti-stick
Hardness	6.0 Mohs
Adherence	Over 5,000 psi to base steel
Impact Resistance	24 inch-lb.
Corrosion Resistance ASTM B-117	Excellent, virtually unaffected by most waste waters, brines, sea water, sour crude, salt spray, organic and inorganic chemicals

From the Top Down, Faster Construction

Every Aquastore tank is factory engineered to customer specifications. Since all components are manufactured in the factory and easily assembled, Aquastore tanks can be installed in many types of weather conditions when field-welded steel and concrete tanks cannot. Tanks are assembled from the top down by factory trained building crews with a jacking system that progressively elevates the structure without the need for expensive cranes and extensive scaffolding. Erection crews can stay safely on the ground. This construction method enables rapid, logical progress for timely completion.

Floors

Aquastore floors can be glass-fused-to-steel or reinforced concrete. A flat steel floor is lined with Aquastore glass-fused-to-steel sheets. When using concrete, Aquastore walls are embedded in the foundation. Authorized Aquastore Dealers can provide site preparation and foundation installation.

Sidewalls

Sidewall erection is completed using a series of specially designed motorized jacks. Each glass-fused-to-steel panel is bolted and sealed into place. Upon completion, the motorized jacks raise the sidewall ring so subsequent rings can be erected. Erecting an Aquastore tank does not require heavy-load cranes or lifting equipment on-site. This unique installation process allows for construction in remote regions as well as metropolitan areas.

Roofs or Domes

All geodesic roofs or domes are free span (do not require columns to support) and are installed on the tanks in the initial phase of construction. Glass-fused-to-steel roofs are available up to 31' in diameter and aluminum geodesic domes are available in all sizes.

Glass-fused-to-steel roofs are manufactured with hard tooling and include radially sectioned steel panels. The roofs are assembled using the same sealant and bolting techniques as the sidewall panels.

Free span, aluminum geodesic domes are available for the complete range of Aquastore tanks. They are constructed with non-corrugated triangular aluminum panels interlocked by a truss system with wide flange extrusions. Domes can be designed to each individual customer's needs, taking into account wind, snow loadings, seismic and design codes.

Sealants

Aquastore tanks feature sealants specifically formulated for chemical resistance appropriate to the application. Each sealant is inspected on a batch-by-batch basis to ensure quality. The sealant is suitable for contact with potable water and is certified to meet ANSI/NSF Additives Standard 61 for indirect additives and is chlorine resistant. Sealants cure to a rubber-like consistency, have excellent adhesion to the glass coating, low shrinkage and are suitable for interior and exterior use.

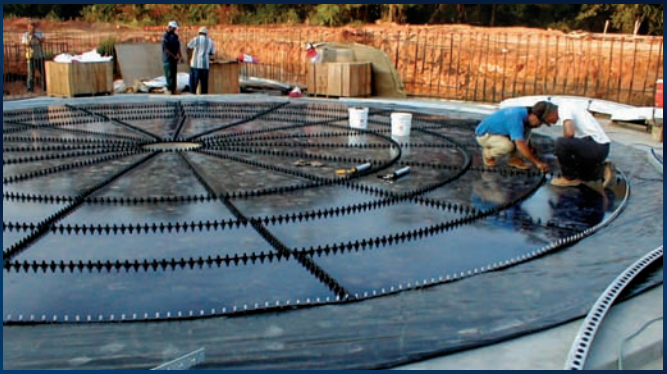

Tank Economics and Lifetime Value

All tanks are not created equal! The glass-fused-to-steel technology in an Aquastore tank delivers greater lifetime value than welded or concrete tanks. When you add up tank benefits over its life cycle, the advantages of Aquastore are hard to beat. It is simply the best quality, lowest maintenance and most flexible tank available.

Consider these advantages:

- **NEVER NEEDS PAINTING**
- Minimal maintenance required over tank life
- Will not corrode or rust
- A guaranteed tank performance warranty
- Turn-key services by an Authorized Aquastore Dealer from approval drawings to tank testing
- No need for cranes or other large equipment for erection
- Erect Aquastore in remote, secluded locations
- Minimize lost construction days due to weather delays or field-applied coatings
- Design Aquastore for future expansion or relocation
- Remove most graffiti easily

The biggest economic advantage is that an Aquastore tank never needs painting! The budgeted dollars that may be used to repair a concrete tank or repaint a welded tank every 8 – 12 years can be diverted to other municipal or industrial needs.

Concrete tanks are expensive, involve long construction periods, need lots of room to build and are not always “maintenance free”. Design specifications allow for a small level of leaking, and some level of cracking is basically expected. Concrete tanks usually take longer to construct than an Aquastore.

Welded tanks can have long lead and construction times. They are limited by external environmental factors when being erected and field-coated. Welded tanks can have high maintenance costs and must be painted multiple times over their life cycle. Their warranty is typically only one year after installation.

The biggest economic advantage is that an Aquastore tank never needs painting!

Low Maintenance

Tank Designs to Meet
Specific Application Needs


Ground Storage Tank


Composite Elevated


Standpipe


Leachate


Wastewater
Clarifier / Sludge / Storage / Mixing


Anaerobic Digestion

Authorized Aquastore Dealers

Authorized Aquastore Dealers offer a turn-key package to customers providing service, support and expertise from start to finish. In addition to selling and erecting an Aquastore tank, dealer sales and service specialists can offer the following:

- **Value engineering – total cost analysis**
- **Tank configuration and layout data**
- **Budgeting**
- **Product engineering specifications**
- **Design criteria assistance**
- **Tank layout drawings**
- **Approval drawings**
- **Certified drawings**
- **Site preparation and layout**
- **Tank construction scheduling**
- **Structural calculations**
- **Tank testing and commissioning**
- **Tank inspection and repair**
- **Maintenance services**
- **Relocation or expansion**
- **Concrete work**
- **Pipe work *(inlet, outlet, overflow, decant, etc.)***
- **Insulation *(spray foam, battens, etc.)***
- **Dome installations**
- **Turn-key tank construction**
- **After sale service**

An Aquastore tank requires minimal maintenance over its life cycle and CST Authorized Dealers can provide complete service packages tailored to your application needs. Most importantly, the glass-fused-to-steel technology experiences little environmental impact and never needs painting, saving hundreds of thousands of dollars over time.

Turn-key package from site preparation to completed and tested tank.

Commitment

AQUASTORE

Features & Accessories

The Aquastore basic system consists of:

- **Glass-fused-to-steel sidewalls**
- **Ladder, cage and platform**
- **Cathodic protection**
- **Gravity vent**
- **Glass-fused-to-steel roofs or aluminum geodesic domes**
- **Roof, dome and sidewall manways**
- **Overflow pipes**
- **Hardware and sealant required to assemble the tank**

① Cathodic Protection

An Aquastore tank's cathodic protection system uses sacrificial anodes to protect the reinforcing bars, mitigate corrosion and provide protection to internal submerged surfaces of the tank. It is incorporated into the Aquastore tank's warranty.

② Gravity Vent

Aquastore tank gravity vents are designed to allow for air exchange during filling and emptying. They are equipped with corrosion-resistant bird and insect screens.

③ Ladder, Cage and Platform

Aquastore tank ladders are constructed of aluminum rails and rungs with hot-dip galvanized cages and step off platforms. Ladders with locking safety cage doors are available.

④ Sidewall Manways

Aquastore tank manways are designed in accordance with AWWA D103 Standards. They are 24 inches (61 cm), 30 inches (76 cm) or 36 inches (91 cm) in diameter and are manufactured with hot-dip galvanized or stainless steel.

⑤ Hardware and Sealants

The hardware and sealants for Aquastore assembly are supplied with each order. Specific types, such as chlorine resistant sealants or hardware with protective covers, are made for the individual application. Heavy duty plastic bolt caps are also available for added protection.

Additional options and accessories.

Additional accessories are available to meet use and specification needs. Accessories include:

- Colors
- Caps and sealer
- Nozzles
- Baffles
- Roof walkways, railings and staircases
- Level indicators

Colors

Aquastore glass coatings are available in standard cobalt blue or four other exterior colors. Forest green, sky blue, desert tan or white colors are available. Inquire for custom colors. Interior color is always white.

Exterior Colors:

Cobalt Blue

Sky Blue

Tan

Forest Green

White

*Colors represented are not exact reproductions but are good representations of available colors.

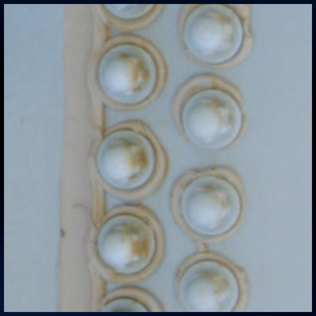

Caps and Sealer

Durable plastic bolt caps offer added protection against weather and corrosion. For specialized applications, sealer alternatives are available.

Nozzles and Baffles

Nozzles and baffles are available depending on tank use and specifications. Engineering flexibility allows these accessories to be incorporated into overall tank design.

Walkways, Railings and Staircases

An option to the standard ladder and cage is a walkway and staircase. Aquastore walkways are hot-dip galvanized steel and are appropriate for situations when regular overhead tank access is required. Both walkways and staircases are available from your local Authorized Dealer.

Level Indicators

Durable and functional, the liquid level indicator is a utilitarian option that can be installed as part of the assembly operation.

Service

“Best in Industry” Warranty

For more than 60 years, CST Storage has offered the most comprehensive manufacturer’s warranty in the industry. The field-proven performance history of Aquastore tanks is one more indication that our products are built to last.

Authorized Aquastore Dealers

CST delivers Aquastore tanks through a network of Authorized Aquastore Dealers. These organizations and their sales representatives are available to discuss project requirements from inception to completion. Experience in your region and application knowledge are valuable during all stages, from project development to specification to erection to the completed and tested tank.

Pricing, budget estimates, foundation layouts, project scheduling, approval drawings and foundation construction are just a few of the areas where Authorized Dealers can help. Our customers deal with one source from start to finish, including service after installation. Dealers are trained to provide superior customer service.

Find your nearest Aquastore dealer in the dealer locator section at **www.aquastore.com.**

AQUASTORE®

Glass Tanks with a Heart of Steel™

CST STORAGE

345 Harvestore Drive, DeKalb, Illinois 60115
Phone: 815-756-1551, Fax: 815-756-1659
www.aquastore.com
e-mail: **sales@aquastore.com**

AMTROL®

WELL-X-TROL®

Diaphragm Well Tanks: WX-400 Series Non-ASME

150 PSIG Working Pressure

Construction

Shell	Steel
Diaphragm	Heavy Duty Butyl
Liner	Antimicrobial Polypropylene w/ Anti-Legionella Protection
System Connection	Malleable Iron (NPTF)
Finish	Red Oxide Primer
Water Circulator	Turbulator™
Air Valve	Schrader Valve w/EPDM Seat
Factory Precharge	25 PSIG (1.7 bar)

Application

- For use in commercial well water and booster pump systems.
- Fixed diaphragm construction.
- Tested to JIS Z 2801 for reduction of Legionella, Staphylococcus and E. coli.
- Follows ASHRAE 188 Anti-Legionella guidelines.
- Sight glass and seismic restraint options available.

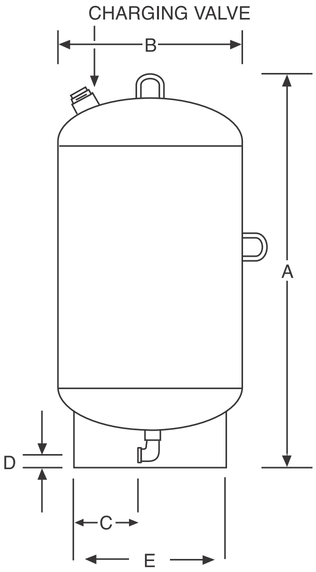

Performance

Maximum Operating Temperature	200°F (93°C)
Maximum Working Pressure	150 PSIG (10.3 bar)
Warranty	1-Year

Non-ASME Models

Model Number	Tank Volume		Max. Accept. Volume		A Tank Height		B Tank Diameter		C Sys. Conn. Inset		D Sys. Conn. Centerline		E Stand Diameter		System Conn. (NPTF)	Shipping Weight	
	Gal	Lit	Gal	Lit	In	mm	In	mm	In	mm	In	mm	In	mm	In	Lbs	Kg
WX-401	18	68	11	42	31	787	16	406	5	124	1½	38	12¾	324	1	96	44
WX-402	25	95	11	42	40	1016	16	406	5	124	1½	38	12¾	324	1	113	51
WX-403	34	129	11	42	49	1245	16	406	5	124	1½	38	12¾	324	1	120	54
WX-404	68	258	34	129	48	1219	24	610	6	159	1⅝	41	16	406	1¼	232	105
WX-405	90	341	34	129	59	1499	24	610	6	159	1⅝	41	16	406	1¼	255	116
WX-406	110	417	34	129	70	1778	24	610	6	159	1⅝	41	16	406	1¼	335	152
WX-407	132	500	46	175	57	1448	30	762	10	254	1¾	44	24	610	1¼	450	204

All dimensions and weights are approximate.

Job Name ______________________ Notes ______________________

Engineer ______________________ ______________________

Contractor ______________________ ______________________

P.O. No. ______________________ ______________________

Sales Rep. ______________________ ______________________

Model No. ______________________ ______________________

188 AntiLegionella

Antimicrobial

Turbulator

NSF CERTIFIED TO NSF/ANSI 61

ISO 9001:2015 CERTIFIED

MADE IN USA

LOW-LEAD IAPMO R&T

APPENDIX VII

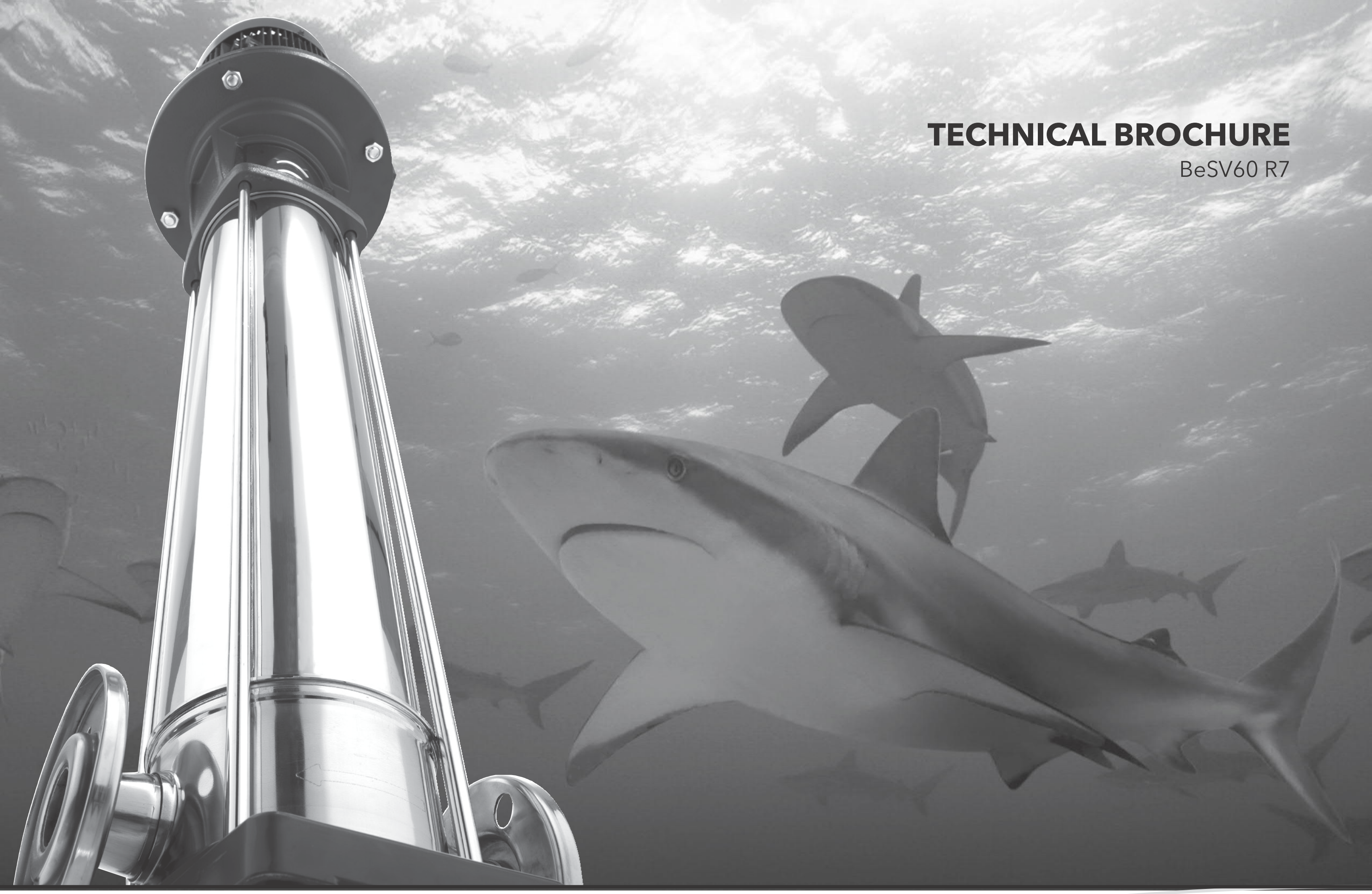

e-SV™ 60 Hz Technical Manual

E-SV SERIES VERTICAL MULTI-STAGE PUMPS

GOULDS
WATER TECHNOLOGY
a xylem brand

Contents

e-SV Rating Plate

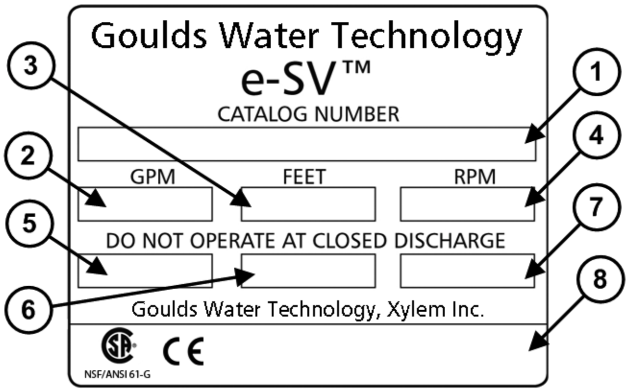

1	Goulds Water Technology Catalog Number
2	Capacity Range
3	TDH Range
4	Rated Speed
5	Rated Horsepower
6	Maximum Operating Pressure
7	Maximum Operating Temperature
8	Pump Serial Number

e-SV Coverage Curve

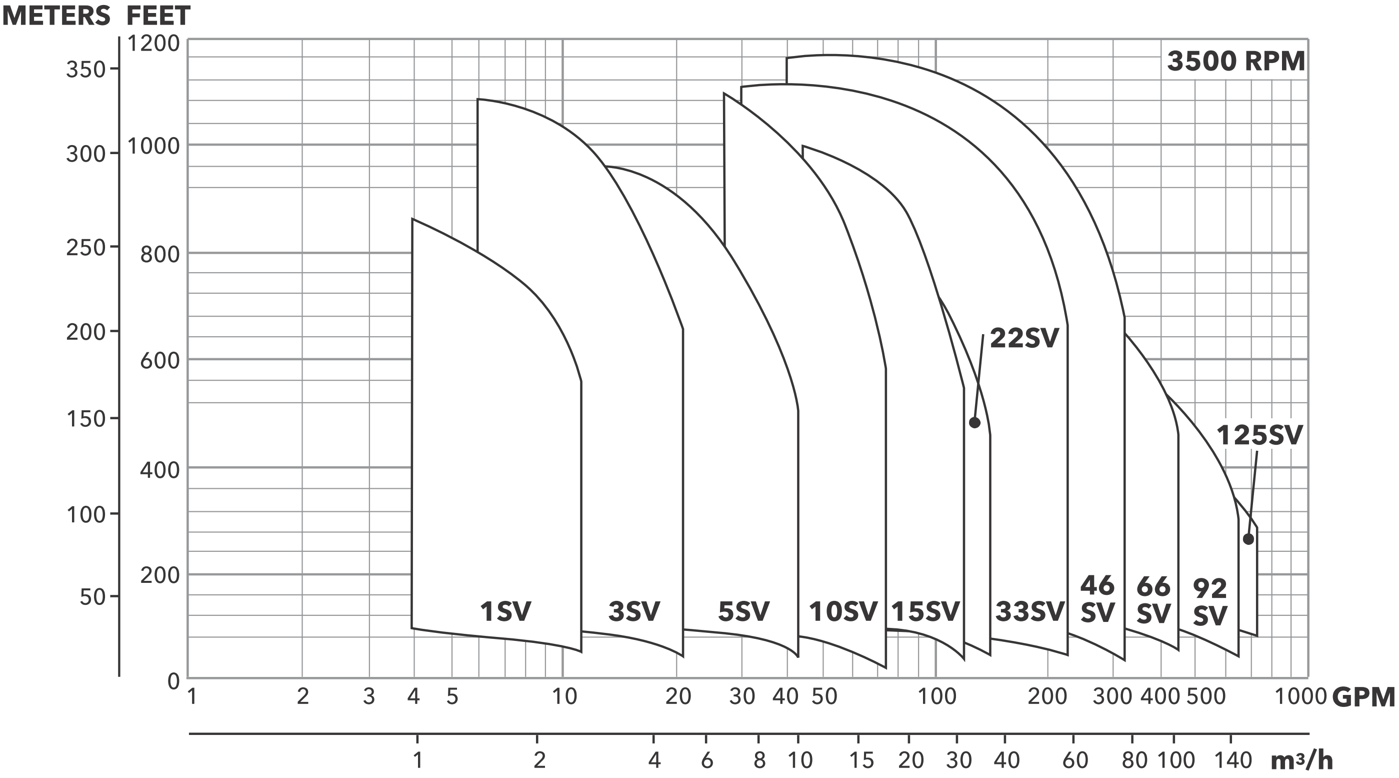

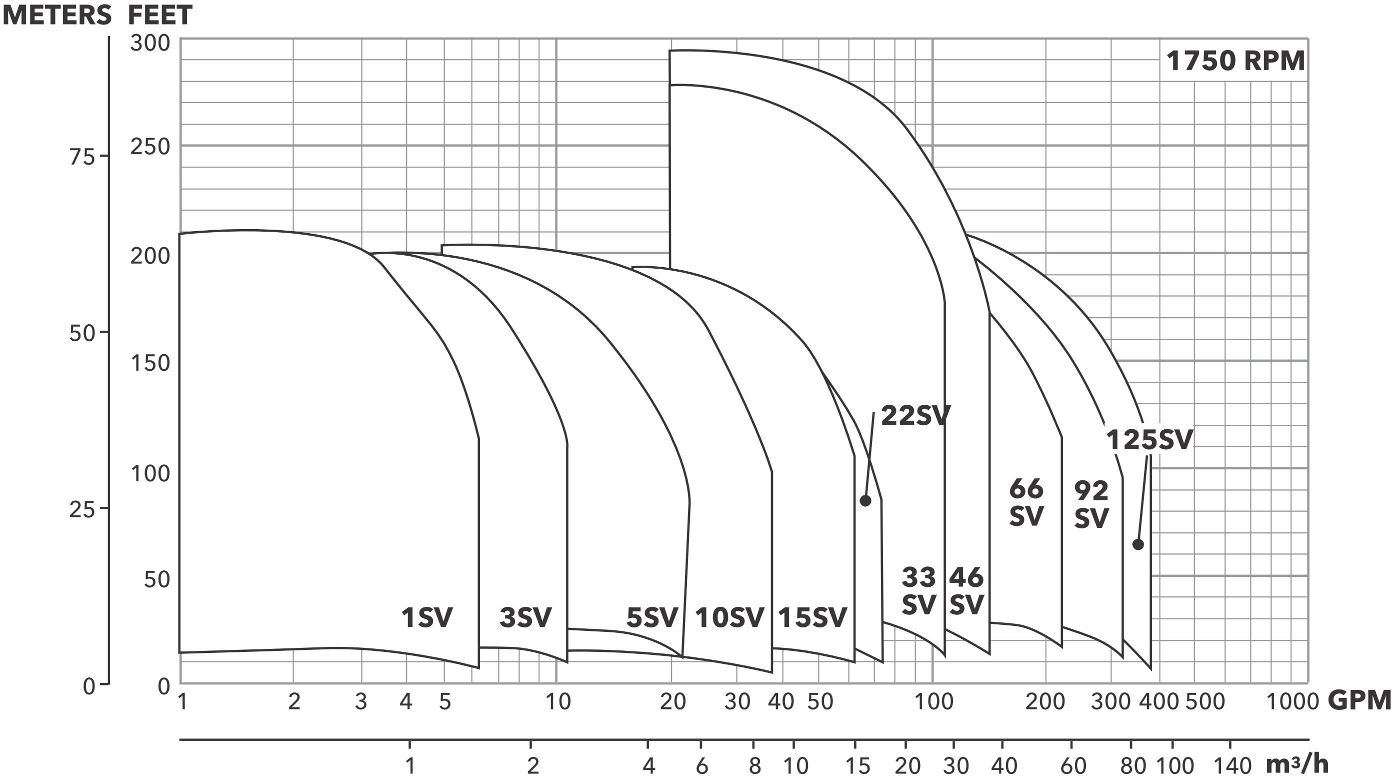

e-SV General Market Specifications

MUNICIPAL, AGRICULTURAL, LIGHT INDUSTRY,
WATER TREATMENT, HEATING AND AIR CONDITIONING

Applications

- Handling of water, free of suspended solids, in the municipal, industrial and agricultural markets
- Pressure boosting and water supply systems
- Fire fighting jockey pumps
- Irrigation systems
- Wash systems
- Water treatment plants: reverse osmosis
- Handling of moderately aggressive liquids, demineralized water, water and glycol, etc.
- Circulation of hot and cold water for heating, cooling and conditioning systems
- Boiler feed

Specifications

PUMP

The e-SV pump is a non-self priming vertical multistage pump coupled to a standard motor.
The liquid end, located between the upper cover and the pump casing, is held in place by tie rods. The pump casing is available with different configurations and connection types.

- Delivery: up to 725 GPM
- Head: up to 1200 feet
- Temperature of pumped liquid:
  -20°F to 250°F (-30°C to 120°C) standard version
- Optional temperature range up to 300°F (149°C) high temperature version
- Maximum operating pressure
  – SV1-22 with oval flanges: 230 PSI (16 bar)
  – SV1-22 with round flanges or Victaulic: 360 or 575 PSI (25 or 40 bar)
  – SV33, 46: 360 or 580 PSI (25 or 40 bar)*
  – SV 66, 92: 360 or 580 PSI (25 or 40 bar)*
  – SV 125: 360 or 580 PSI (25 or 40 bar)
- Direction of rotation: clockwise looking at the pump from the top down (marked with an arrow on the adapter and on the coupling).

MOTOR

- Standard NEMA TC Frame motors in open drip proof or totally enclosed fan cooled.
- 3500 RPM nominal
- Standard voltage:
  - Single phase version: 115-208/230 V, 60 Hz up to 3 HP or 208-230 V for 5 HP
  - Three phase version, 2 pole: 208-230/460 V, 60 Hz up 75 HP

* Based on pump staging

e-SV Characteristics

1SV, 3SV, 5SV, 10SV, 15SV, 22SV Series

- Vertical multistage centrifugal pump. All metal parts in contact with the pumped liquid are made of stainless steel.
- The following versions are available:

  F – ANSI flanges, in-line delivery and suction ports, AISI 304

  T – Oval flanges (NPT), in-line delivery and suction ports, AISI 304

  R – ANSI flanges, delivery port above the suction port, with four adjustable positions, AISI 304

  N – ANSI flanges, in-line delivery and suction ports, AISI 316

  P – Victaulic couplings, in-line delivery and suction ports, AISI 316

  G – ANSI flange, in-line delivery and suction ports, Class 35/40B cast iron.

  C – ISO clamp, AISI 316
- Innovative axial load compensation system on pumps with higher head. This ensures reduced axial thrusts and enables the use of standard NEMA TC motors that are easily found in the market.
- Seal housing chamber designed to prevent the accumulation of air in the critical area next to the mechanical seal
- Mechanical seal according to EN 12756 (ex DIN 24960) and ISO 3069
- Versions with ANSI flanges that can be coupled to ANSI raised face counter-flanges
- Threaded oval counter-flanges made of stainless steel are standard supply for the T versions
- Easy maintenance. No special tools required for assembly or disassembly
- Standard version for temperatures ranging from: -20°F to 250°F (30°C to 120°C)

33SV, 46SV, 66SV, 92SV, 125SV Series

- Vertical multistage centrifugal pump with impellers, diffusers and outer sleeve made entirely of stainless steel, and with pump casing and motor adapter made of cast iron in the standard version
- Rotating components made entirely of AISI 316 stainless steel
- High heads and capacities five sizes: 33SV, 46SV, 66SV, 92SV, 125SV
- Re-designed liquid end provides improved efficiency and energy savings
- Innovative axial load compensation system on pumps with higher head. This ensures reduced axial thrusts and enables the use of standard NEMA TC motors that are easily found in the market.
- Balanced mechanical seal according to EN 12756 (ex DIN 24960) and ISO 3069, which can be replaced without removing the motor from the pump
- Seal housing chamber designed to prevent the accumulation of air in the critical area next to the mechanical seal
- Standard version for temperature ranging from: -20°F to 250°F (-30°C to 120°C)
- Pump body fitted with taps for installing pressure gauges on both suction and delivery flanges
- In-line ports with ANSI flanges that can be coupled to counter-flanges, in compliance with ANSI raised face.
- Mechanical sturdiness and easy maintenance. No special tools required for assembly or disassembly.

Optional Features

- Horizontal version
- Special voltages, 50 Hz frequency
- Special materials for the mechanical seal, gaskets and elastomers
- Tropicalized motors
- Premium E and explosion proof motors
- 1750 RPM, 4 pole motors
- Passivation

General Characteristics – 2-pole

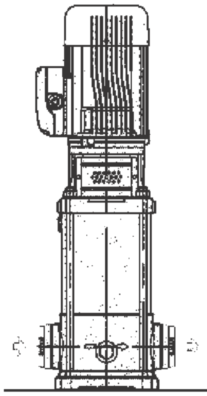

**SERIES SVT
1SV, 3SV, 5SV,
10SV, 15SV, 22SV**

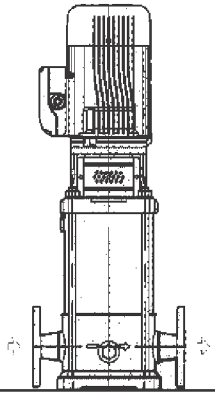

**SERIES SVF, SVN
1SV, 3SV, 5SV,
10SV, 15SV, 22SV**

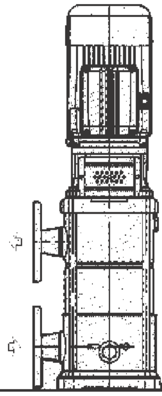

**SERIES SVR
1SV, 3SV, 5SV,
10SV, 15SV, 22SV**

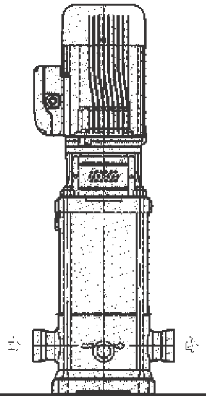

**SERIES SVP
VICTAULIC
1SV, 3SV, 5SV,
10SV, 15SV, 22SV**

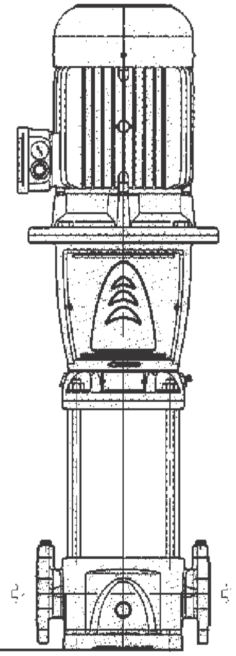

**SERIES SVG, SVN
33SV, 46SV, 66SV,
92SV, 125SV**

e-SV Product Range	**1SV**	**3SV**	**5SV**	**10SV**	**15SV**	**22SV**	**33SV**	**46SV**	**66SV**	**92SV**	**125SV**
Nominal Flow (GPM)	9	15	30	50	80	110	150	220	350	450	600
Flow Range(GPM)	2-12	3-22	7-45	9-75	18-125	21-150	30-195	45-285	70-420	90-580	120-700
Max. Head (Ft)	860	1085	975	1150	1060	880	1125	1210	850	715	570
Max. Working Pressure (PSIG)	580					360/580					
Temperature Range (°F)	Standard -20°F - 250°F (-30°C - 121°C)										
High Temp Option	up to 300°F (150°C)						–				
Motor Power [HP]	½ – 5 HP	½ – 7½	¾ – 10	¾ – 20	2 – 25	3 – 30	3 – 60	7½ – 75	10 – 75	15 – 75	20 – 75
Max Pump Efficiency	51%	60%	70%	70%	70%	71%	76%	78%	78%	80%	79%
Materials of Construction											
SVT	304 SS						–				
SVF	304 SS						–				
SVN	316L SS						Cast Stainless Steel / 316L SS				
SVR	304 SS						–				
SVP	316L SS						–				
SVC	316L SS						–				
SVG	ASTM Class 35/40B Cast Iron / 304 SS										
Connection Sizes											
SVT - Oval NPT	1¼"	1¼"	1¼"	2"	2"	2"	–				
SVF - Round ANSI Size/Class	1¼" 300#	1¼" 300#	1¼" 300#	2" 300#	2" 300#	2" 300#	–				
SVN - Round ANSI Size/Class	1¼" 300#	1¼" 300#	1¼" 300#	2" 300#	2" 300#	2" 300#	2½" 150/300#	3" 150/300#	4" 150/300#	4" 150/300#	5" 150/300#
SVR - Top/Bottom Round ANSI Size/Class	1¼" 300#	1¼" 300#	1¼" 300#	2" 300#	2" 300#	2" 300#	–				
SVP - Victaulic	1¼"	1¼"	1¼"	2"	2"	2"	–				
SVC - Clamp	1½"	1½"	1½"	2"	2"	2"	–				
SVG - Cast Iron Size/Class	1¼" 250#	1¼" 250#	1¼" 250#	2" 250#	2" 250#	2" 250#	2½" 125/250#	3" 125/250#	4" 125/ 250#	4" 125/ 250#	5" 125/250#

Typical Applications of e-SV Series Multi-Stage Pumps

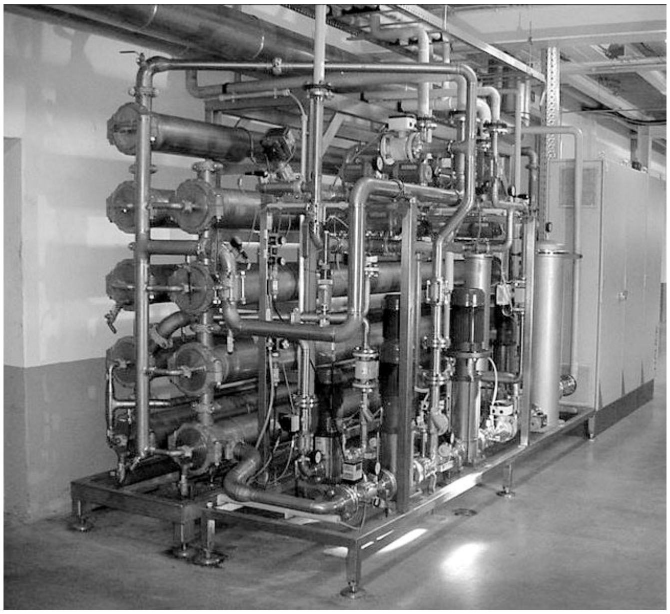

Water Supply and Pressure Boosting

- Pressure boosting in buildings, hotels, residential complexes
- Pressure booster stations, supply of water networks
- Booster packages

Water Treatment

- Ultra filtration systems
- Reverse osmosis systems
- Water softeners and de-mineralization
- Distillation systems
- Filtration

Light Industry

- Washing and cleaning plants (washing and degreasing of mechanical parts, car and truck wash tunnels, washing of electronic industry circuits)
- Commercial washers
- Fire fighting system pumps

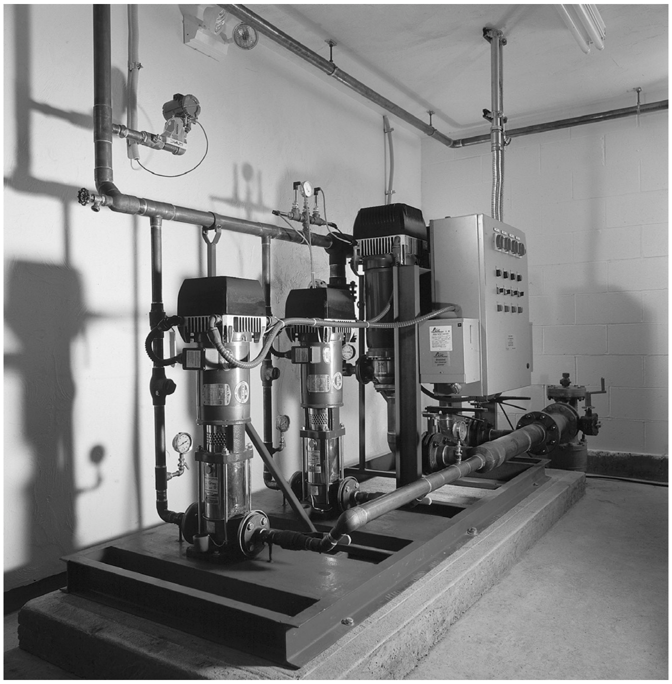

Irrigation and Agriculture

- Greenhouses
- Humidifiers
- Sprinkler irrigation

Heating, Ventilation and Air Conditioning (HVAC)

- Cooling towers and systems
- Temperature control systems
- Refrigerators
- Induction heating
- Heat exchangers
- Boilers
- Water recirculation and heating

e-SV Product Line
Numbering System for 1 – 22SV Liquid End Only

The various versions of the e-SV line are identified by a product code number on the pump label. This number is also the catalog number for the pump. The meaning of each digit in the product code number is shown below.
Note: Not all combinations are possible.

Example Product Code

22 SV 0 2 F E 3 0

Special Configurations (optional Characters)

A = Cooling Chamber only
B = Cooling Chamber + Passivation
C = Cooling Chamber + Low NPSH
F = Destaged - 1 stage
G = Destaged - 2 stage
H = Horizontal mount only
J = Horizontal mount + Passivation
K = Horizontal mount + Low NPSH
L = Horizontal mount + High Pressure
N = Low NPSH only
P = Passivation only
S = Customized Configuration
Z = High pressure only

Seal Material

0 = Carb-SilCar-Viton (Standard)
1 = Carb-SilCar-AFLAS (HighTemp)
2 = SilCar-SilCar-Viton
4 = SilCar-SilCar-EPR
6 = Carb-SilCar-EPR

Pole-Hz

1 = 2–50 3 = 2–60
2 = 4–50 4 = 4–60

Motor Frame (NEMA)

A = 56C D = 250TC
B = 180TC E = 280TC
C = 210TC

Configuration

C = Clamp-316 P = Victaulic-316
F = Round-304 (SVB) T = Oval-304 (SVA)
G = CI-304
N = Round-316 (SVD)

Top / Bottom
R = (SVC) 12Suct-12Disch
W = (SVC) 12Suct-03Disch
X = (SVC) 12Suct-06Disch
Y = (SVC) 12Suct-09Disch
Suction discharge location

Total Number of Impeller Stages (may be 1 or 2 characters)

Product Line:

SV – Stainless Vertical

Nominal Flow:

1 = 5 GPM 10 = 53 GPM
3 = 16 GPM 15 = 80 GPM
5 = 26 GPM 22 = 116 GPM

e-SV Product Line
Numbering System for 33 – 125SV Liquid End Only

The various versions of the e-SV line are identified by a product code number on the pump label. This number is also the catalog number for the pump. The meaning of each digit in the product code number is shown below.
Note: Not all combinations are possible.

Example Product Code

125 SV 8 1 2 B F E 2 0 _ _

Special Configurations (optional Characters)
H = Horizontal mount only
J = Horizontal mount + Passivation
K = Horizontal mount + Low NPSH (33, 46 and 66 only)
L = Horizontal mount + High Pressure
N = Low NPSH only (33, 46 and 66 only)
S = Customized Configuration
Z = High pressure (250/300# pump body)

Seal Material
0 = Carb-SilCar-Viton
2 = SilCar-SilCar-Viton
4 = SilCar-SilCar-EPR
6 = Carb-SilCar-EPR
7 = Carb-SilCar-Viton (Cart)
8 = SilCar-SilCar-EPR (Cart)

Pole-Hz
1 = 2–50 3 = 2–60
2 = 4–50 4 = 4–60

Motor Frame (NEMA)
B = 180TC E = 280TC
C = 210TC F = 320TSC
D = 250TC G = 360TSC

Configuration
G = Round-CI-304
N = Round-316

125SV ONLY
Reduced Trim Diameter A = 141 mm B = 136 mm C = 145 mm (full dia.)
Blank if 33-92SV

Number of Reduced Trim Impellers

Total Number of Impellers/Stages

Product Line: SV – Stainless Vertical

Nominal Flow:
33 = 175 GPM
46 = 240 GPM
66 = 350 GPM
92 = 485 GPM
125 = 660 GPM

e-SV Product Line
Numbering System for 1 – 22SV Pump & Motor Combination

The various versions of the e-SV line are identified by a product code number on the pump label. This number is also the catalog number for the pump. The meaning of each digit in the product code number is shown below.
Note: Not all combinations are possible.

Example Product Code

2 SV 2 2 F A 2 F 5 1 A H

Special Configurations (1 or 2 Characters)

A = Cooling Chamber only
B = Cooling Chamber + Passivation
C = Cooling Chamber + Low NPSH
F = Destaged - 1 stage
G = Destaged - 2 stage
H = Horizontal mount only
J = Horizontal mount + Passivation
K = Horizontal mount + Low NPSH
L = Horizontal mount + High Pressure
M = i-Alert
N = Low NPSH only
P = Passivation only
S = Customized Configuration
Z = High Press (250/300# pump body)

Seal Material

0 = Carb-SilCar-Viton
1 = Carb-SilCar-AFLAS (HighTemp)
2 = SilCar-SilCar-Viton
4 = SilCar-SilCar-EPR
6 = Carb-SilCar-EPR

Motor Enclosure

1 = ODP
2 = TEFC
3 = X-Proof
4 = WD - Tropical
5 = Prem-ODP
6 = Prem-TEFC
7 = Prem-XP
8 = Prem-WD
9 = Marine
A = Chem
B = Prem-Chem
C = Class 1 Div 2

Voltage

A = 115/230
B = 230
C = 230/460
D = 460
E = 575
F = 208-230/460
G = 200
H = 190/380
J = 115/208-230
K = 208
L = 208-230
M = 190-380/415
N = 380
P = 110/220
R = 220
S = 415
T = 220/380 WYE
U = 380-660 WYE
V = 208-230/460 WYE
W = 220/380/440

Pole-Hz-Phase

1 = 2-50-1
2 = 2-50-3
3 = 2-60-1
4 = 2-60-3
5 = 4-50-1
6 = 4-50-3
7 = 4-60-1
8 = 4-60-3

HP Rating

A = 0.50
B = 0.75
C = 1.00
D = 1.50
E = 2
F = 3
G = 5
H = 7.5
J = 10
K = 15
L = 20
M = 25
N = 30
P = 40
R = 50
S = 60
T = 75
U = 100

Configuration OPTION

C = Clamp-316
F = Round-304 (SVB)
G = CI-304
N = Round-316 (SVD)
P = Victaulic-316
T = Oval-304 (SVA)

Top / Bottom

R = (SVC) 12Suct-12Disch
W = (SVC) 12Suct-03Disch
X = (SVC) 12Suct-06Disch
Y = (SVC) 12Suct-09Disch

Suction discharge location

Total Number of Impeller Stages (may be 1 or 2 characters)

Product Line:

SV – Stainless Vertical

Nominal Flow:

1 = 5 GPM
3 = 16 GPM
5 = 26 GPM
10 = 53 GPM
15 = 80 GPM
22 = 116 GPM

e-SV Product Line
Numbering System for 33 – 125SV Pump & Motor Combination

The various versions of the e-SV line are identified by a product code number on the pump label. This number is also the catalog number for the pump. The meaning of each digit in the product code number is shown below.
Note: Not all combinations are possible.

Example Product Code

125 SV 8 2 A G K 3 F 2 0 _ _

Special Configurations (1 or 2 Characters)
H = Horizontal mount only
J = Horizontal mount + Passivation
K = Horizontal mount + Low NPSH
L = Horizontal mount + High Pressure
M = i-Alert
N = Low NPSH only (33, 46 and 66 only)
P = Passivation only
S = Customized Configuration
Z = High Press (250/300# pump body/Casing)

Seal Material
0 = Carb-SilCar-Viton
2 = SilCar-SilCar-Viton
4 = SilCar-SilCar-EPR
6 = Carb-SilCar-EPR
7 = Carb-SilCar-Viton (Cart)
8 = SilCar-SilCar-EPR (Cart)

Motor Enclosure
1 = ODP
2 = TEFC
3 = X-Proof
4 = WD - Tropical
5 = Prem-ODP
6 = Prem-TEFC
7 = Prem-XP
8 = Prem-WD
9 = Marine
A = Chem
B = Prem-Chem
C = Class 1 Div 2

Voltage
A = 115/230
B = 230
C = 230/460
D = 460
E = 575
F = 208-230/460
G = 200
H = 190/380
J = 115/208-230
K = 208
L = 208-230
M = 190-380/415
N = 380
P = 110/220
R = 220
S = 415
T = 220/380 WYE
U = 380-660 WYE
V = 208-230/460 WYE

Pole-Hz-Phase
1 = 2-50-1
2 = 2-50-3
3 = 2-60-1
4 = 2-60-3
5 = 4-50-1
6 = 4-50-3
7 = 4-60-1
8 = 4-60-3

HP Rating
F = 3
G = 5
H = 7.5
J = 10
K = 15
L = 20
M = 25
N = 30
P = 40
R = 50
S = 60
T = 75
U = 100

Configuration
G = Round-CI-304
N = Round-316

125SV ONLY
Reduced Trim Diameter A = 141 mm B = 136 mm C = 145 mm (full dia.)
Blank if 33-92SV

Number of Reduced Trin Impeller

Total Number of Impeller Stages (may be 1 or 2 characters)

Product Line:
SV – Stainless Vertical

Nominal Flow:
33 = 175 GPM
46 = 240 GPM
66 = 350 GPM
92 = 485 GPM
125 = 660 GPM

Base Models: 1-22SV — Major Components

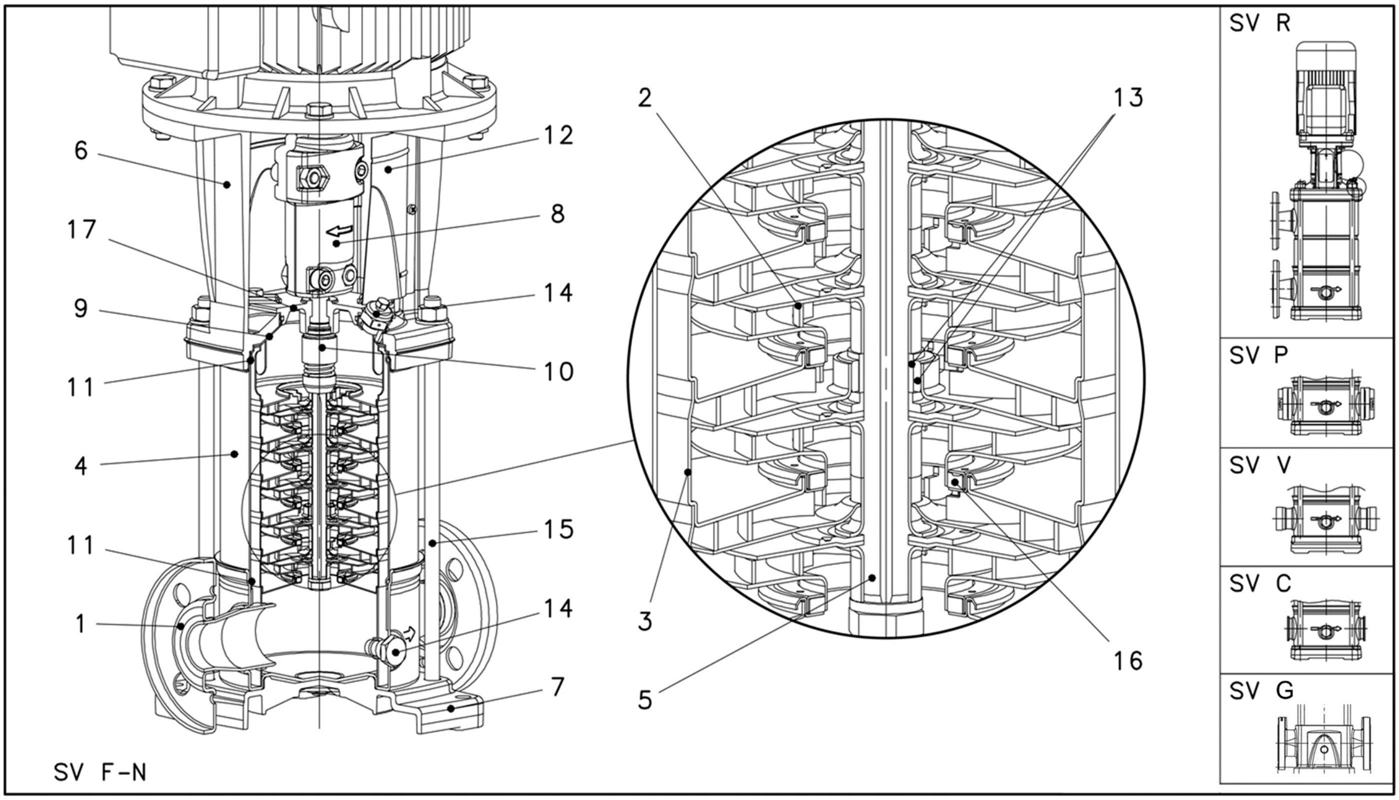

Base Models: 1-22SV – Major Components

F, G, P, R VERSIONS

Ref. No.	Name	Material	Reference Standards	
			USA	Europe
1	Pump Body	Stainless Steel (F, P, R)	AISI 304	EN 10088-1-X5-CrNi18-10 (1.4301)
		Cast Iron (G)	ASTM Class 35/40B	EN 1561 GJL 250 (JL1040)
2	Impeller	Stainless Steel	AISI 304	EN 10088-1-X5-CrNi18-10 (1.4301)
3	Diffuser	Stainless Steel	AISI 304	EN 10088-1-X5-CrNi18-10 (1.4301)
4	Casing	Stainless Steel	AISI 316L	EN 10088-1-X2-CrNiMo17-12-2 (1.4404)
5	Shaft	Stainless Steel	AISI 316	EN 10088-1-X2-CrNiMo17-12-2 (1.4401)
6	Adapter	Cast Iron	ASTM Class 35/40B	EN 1561-GJL-250 (JL1040)
7	Base	Aluminum (F, P, R)	A384.0-F	EN 1706-AC-AlSi11Cu2(Fe) (AC46100)
		N/A (G)	N/A	N/A
8	Coupling	Aluminum	A384.0-F	EN 1706-AC-AlSi11Cu2(Fe) (AC46100)
9	Seal Plate	Stainless Steel	AISI 316L	EN 10088-1-X2-CrNi17-12-2 (1.4404)
10	Mechanical Seal	Silicon Carbide / Carbon / Viton (opt. EPDM)		
11	Elastomers	Viton (opt. EPDM)		
12	Coupling Guard	Stainless Steel	AISI 304	EN 10088-1-X5-CrNi18-10 (1.4301)
13	Shaft Sleeve and Bushing	Tungsten Carbide		
14	Fill/Drain Plugs	Stainless Steel	AISI 316	EN 10088-1-X2-CrNiMo17-12-2 (1.4401)
15	Tie Rods	Carbon Steel / Zinc Plated	A29 Gr. 1045	EN 10277
16	Wear Ring	PPS		
17	Seal Gland	Stainless Steel	AISI 316	EN 10088-1-X2-CrNiMo17-12-2 (1.4401)

N, P, C VERSIONS

Ref. No.	Name	Material	Reference Standards	
			USA	Europe
1	Pump Body	Stainless Steel	AISI 316L	EN 10088-1-X2-CrNiMo17-12-2 (1.4404)
2	Impeller	Stainless Steel	AISI 316L	EN 10088-1-X2-CrNiMo17-12-2 (1.4404)
3	Diffuser	Stainless Steel	AISI 316L	EN 10088-1-X2-CrNiMo17-12-2 (1.4404)
4	Casing	Stainless Steel	AISI 316L	EN 10088-1-X2-CrNiMo17-12-2 (1.4404)
5	Shaft	Stainless Steel	AISI 316	EN 10088-1-X2-CrNiMo17-12-2 (1.4401)
6	Adapter	Cast Iron	ASTM Class 35/40B	EN 1561-GJL-250 (JL1040)
7	Base	Aluminum	A384.0-F	EN 1706-AC-AlSi11Cu2(Fe) (AC46100)
8	Coupling	Aluminum	A384.0-F	EN 1706-AC-AlSi11Cu2(Fe) (AC46100)
9	Seal Plate	Stainless Steel	AISI 316L	EN 10088-1-X2-CrNi17-12-2 (1.4404)
10	Mechanical Seal	Silicon Carbide / Carbon / Viton (opt. EPDM)		
11	Elastomers	Viton (opt. EPDM)		
12	Coupling Guard	Stainless Steel	AISI 304	EN 10088-1-X5-CrNi18-10 (1.4301)
13	Shaft Sleeve and Bushing	Tungsten Carbide		
14	Fill/Drain Plugs	Stainless Steel	AISI 316	EN 10088-1-X2-CrNiMo17-12-2 (1.4401)
15	Tie Rods	Carbon Steel / Zinc Plated	A29 Gr. 1045	EN 10277
16	Wear Ring	PPS		
17	Seal Gland	Stainless Steel	AISI 316	EN 10088-1-X2-CrNiMo17-12-2 (1.4401)

Base Model: 33SV, 46SV, 66SV and 92SV – Major Components

SV G-N

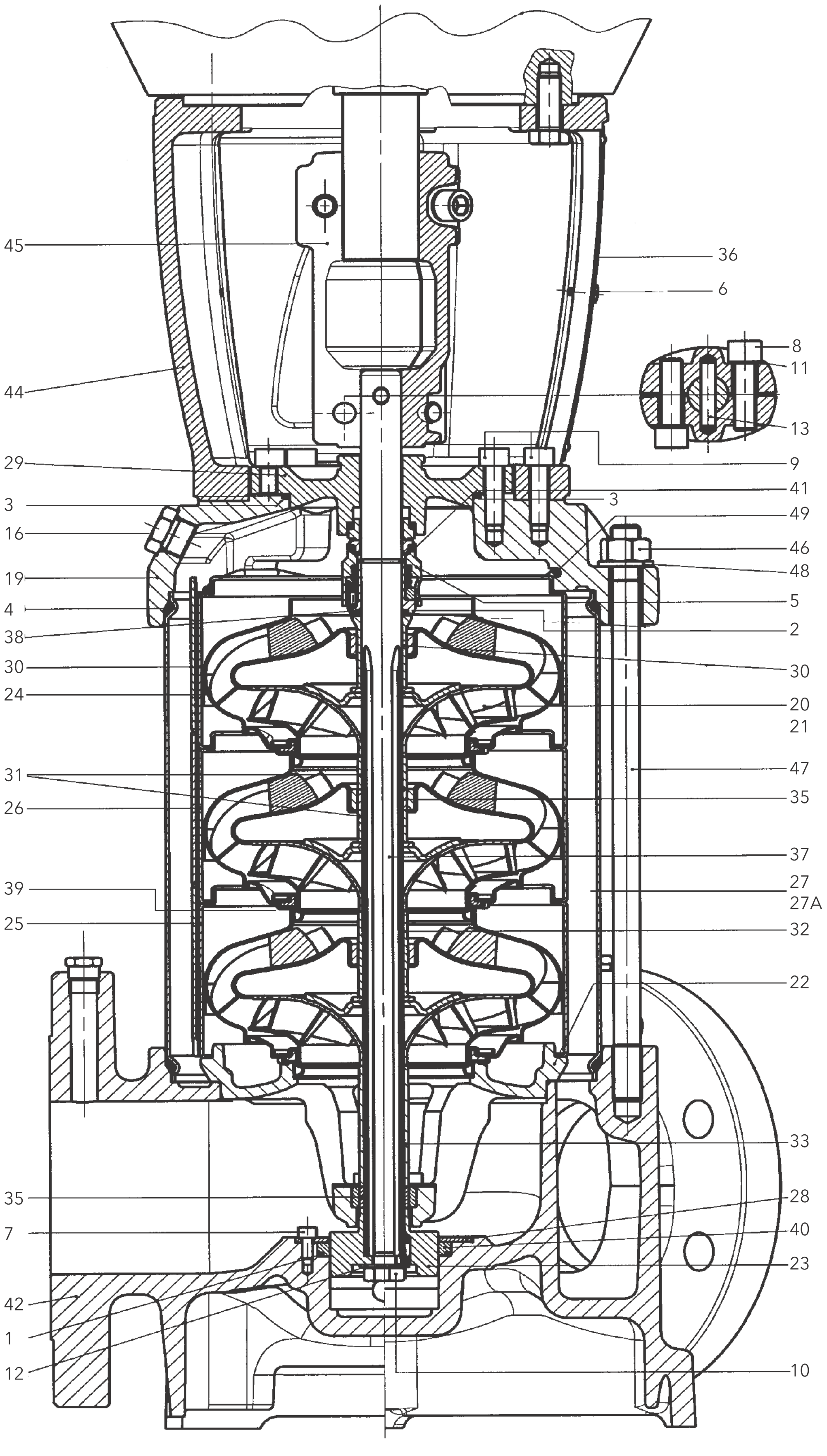

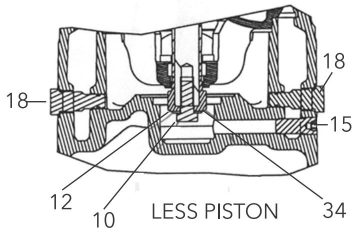

LESS PISTON

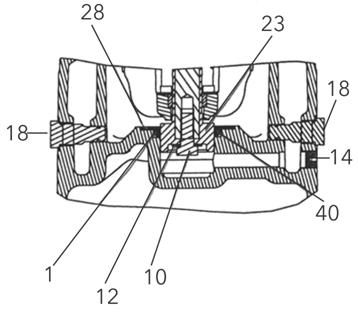

WITH PISTON

Base Model: 33SV, 46SV, 66SV and 92SV – Major Components

No.	Description	SVG (33 – 92SV)			SVN (33 – 92SV)		
		Material	ASTM	DIN	Material	ASTM	DIN
1	O-Ring, Piston Seal	Viton (std) EPDM (opt)			Viton (std) EPDM (opt)		
2	O-Ring, Mechanical Seal Sleeve	Viton (std) EPDM (opt)			Viton (std) EPDM (opt)		
3	O-Ring, Seal housing	Viton (std) EPDM (opt)			Viton (std) EPDM (opt)		
4	O-Ring, Sleeve	Viton (std) EPDM (opt)			Viton (std) EPDM (opt)		
5	Mechanical Seal	See Seal Materials Chart for Complete Detail			See Seal Materials Chart for Complete Details		
5A	Cartridge Seal (not shown)						
6	Screw, Guard	Stainless Steel	A193-304	1.4301	Stainless Steel	A193-304	1.4301
7	Screw, Piston Holding Disc	Stainless Steel	A193-316	1.4401	Stainless Steel	A193-316	1.4401
8	Screw, Coupling	Zinc Plated Steel	B363		Zinc Plated Steel	B633	
9	Screw, MA and Seal Housing	Zinc Plated Steel	B633		Zinc Plated Steel	B633	
10	Screw, Impeller	Stainless Steel	A193-316	1.4401	Stainless Steel	A193-316	1.4401
11	Washer, Coupling	Carbon Steel	A108		Carbon Steel	A108	
12	Washer, Impeller	Stainless Steel	A193-316	1.4401	Stainless Steel	A193-316	1.4401
13	Pin, Coupling	Carbon Steel	A108		Carbon Steel	A108	
14	Plug, with Piston	Stainless Steel	A193-316	1.4401	Stainless Steel	A193-316	1.4401
15	Plug, without Piston	Stainless Steel	A193-316	1.4401	Stainless Steel	A193-316	1.4401
16	Plug, Fill	Stainless Steel/O-Ring	A193-316	1.4401	Stainless Steel/O-Ring	A193-316	1.4401
17	Plug, Vent (not shown)	Stainless Steel/O-Ring	A193-316	1.4401	Stainless Steel/O-Ring	A193-316	1.4401
18	Plug, Drain	Stainless Steel/O-Ring	A193-316	1.4401	Stainless Steel/O-Ring	A193-316	1.4401
19	Pump Head	Cast Iron	A48 Class 35	JL1030	Stainless Steel	316 CF8M	1.4408
20	Impeller, Full Diameter	Stainless Steel	A193-316L	1.4404	Stainless Steel	A193-316L	1.4404
21	Impeller, Reduced Diameter	Stainless Steel	A193-316L	1.4404	Stainless Steel	A193-316L	1.4404
22	Lower Bearing Assembly	SS/Cast Iron	A193-316L/A48 Class 35	1.4404/JL1030	Stainless Steel	A193-316L/316 CF8M	1.4404/1.4408
23	Piston	Duplex SS	A182-F51	1.4462	Duplex SS	A182-F51	1.4462
24	Diffuser, Final	Stainless Steel	A193-316L	1.4404	Stainless Steel	A193-316L	1.4404
25	Diffuser with Carbon Bushing	Stainless Steel	A193-316L	1.4404	Stainless Steel	A193-316L	1.4404
26	Diffuser with Tungsten Bushing	Stainless Steel	A193-316L	1.4404	Stainless Steel	A193-316L	1.4404
27	Outer Sleeve, 25 Bar	Stainless Steel	A193-316L	1.4404	Stainless Steel	A193-316L	1.4404
27A	Outer Sleeve, 40 Bar	Stainless Steel	A193-316L	1.4404	Stainless Steel	A193-316L	1.4404
28	Holding Disc, Piston Seal	Stainless Steel	A193-316L	1.4404	Stainless Steel	A193-316L	1.4404
29	Seal Housing	Cast Iron	A48 Class 35	JL1030	Stainless Steel	316 CF8M	1.4408
30	Spacer, Impeller Final	Stainless Steel	A193-316	1.4401	Stainless Steel	A193-316	1.4401
31	Spacer, Shaft Bushing	Stainless Steel	A193-316	1.4401	Stainless Steel	A193-316	1.4401
32	Spacer, Impeller	Stainless Steel	A193-316	1.4401	Stainless Steel	A193-316	1.4401
33	Spacer, Impeller Lower (66-92SV)	Stainless Steel	A193-316	1.4401	Stainless Steel	A193-316	1.4401
34	Bushing, Non-Piston	Stainless Steel	A193-316	1.4401	Stainless Steel	A193-316	1.4401
35	Tungsten Carbide Bushing	Tungsten Carbide			Tungsten Carbide		
36	Coupling Guard	Stainless Steel	A193-304	1.4301	Stainless Steel	304	1.4301
37	Shaft	Duplex SS	A182-F51	1.4462	Duplex SS	A183-F51	1.4462
38	Mechanical Seal Shaft Sleeve	Stainless Steel	A193-316	1.4401	Stainless Steel	A193-316	1.4401
39	Wear Ring, Impeller	PPS Glass Filled			PPS Glass Filled		
40	Piston Seal	Impregnated Carbon			Impregnated Carbon		
41	Stop Ring, Impeller	Stainless Steel	A193-316	1.4401	Stainless Steel	A193-316	1.4401
42	Pump Body	Cast Iron	A48 Class 35	JL1030	Stainless Steel	316 CF8M	1.4408
43	Motor Adapter Plate (not shown)	Cast Iron	A48 Class 25	JL1030	Cast Iron	A48 Class 25	JL1030
44	Motor Adapter	Cast Iron	A48 Class 25	JL1030	Cast Iron	A48 Class 25	JL1030
45	Coupling, Half	Cast Iron	A48 Class 25	JL1030	Cast Iron	A48 Class 25	JL1030
46	Nut, Tie-Rod	Zinc Plated Steel	B633		Zinc Plated Steel	B633	
47	Tie-Rod	Zinc Plated Steel	B633		Zinc Plated Steel	B633	
48	Washer, Tie-Rod	Zinc Plated Steel	B633		Zinc Plated Steel	B633	
49	Spring, Final Diffuser	Stainless Steel	A193-316	1.4401	Stainless Steel	A193-316	1.4401

Base Models: 125SV – Major Components

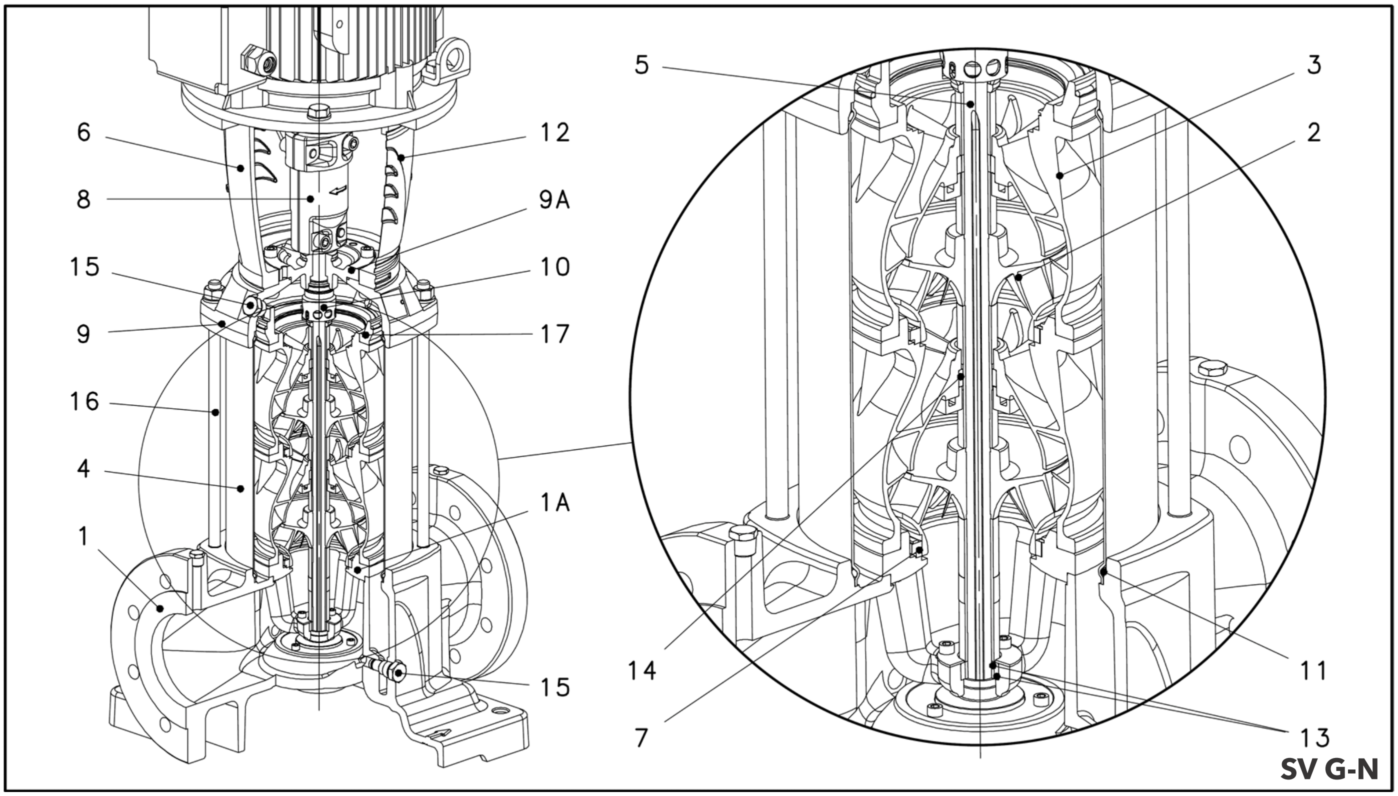

Base Models: 125SV – Major Components

G VERSIONS

Ref. No.	Name	Material	Reference Standards	
			USA	Europe
1	Pump Body	Cast Iron	ASTM Class 35/40B	EN 1561-GJL-250 (JL1040)
2	Impeller	Stainless Steel	AISI 304	EN 10088-1-X5-CrNi18-10 (1.4301)
3	Diffuser	Stainless Steel	AISI 304	EN 10088-1-X5-CrNi18-10 (1.4301)
4	Casing	Stainless Steel	AISI 316L	EN 10088-1-X2-CrNiMo17-12-2 (1.4404)
5	Shaft	Duplex Stainless Steel	UNS S 31803	EN 10088-1-X17-CrNiMoN22-5-3 (1.4507)
6	Adapter (up to 40HP)	Cast Iron	ASTM Class 25	EN 1561-GJL-200 (JL1040)
	Adapter (50HP and higher)		ASTM Class A536	EN 1561-GJL-500-7 (JS1050)
7	Wear Ring	PPS		
8	Coupling (up to 40HP)	Cast Iron	A384.0-F	EN 1706-AC-AlSi11Cu2(Fe) (AC46100)
	Coupling (50HP and higher)			
9-9A	Upper Head / Seal Housing	Cast Iron	ASTM Class 35/40B	EN 1561-GJL-250 (JL1040)
10	Mechanical Seal	Silicon Carbide / Carbon / Viton (opt. EPDM)		
11	Elastomers	Viton (opt. EPDM)		
12	Coupling Guard	Stainless Steel	AISI 304	EN 10088-1-X5-CrNi18-10 (1.4301)
13	Shaft Sleeve and Bushing	Tungsten Carbide		
14	Bushing for Diffuser	Carbon		
15	Fill/Drain Plugs	Stainless Steel	AISI 316	EN 10088-1-X2-CrNiMo17-12-2 (1.4401)
16	Tie Rods	Carbon Steel / Zinc Plated	A29 Gr. 1045	EN 10277
17	Adapter Ring	Stainless Steel	AISI 304	EN 10088-1-X5-CrNi18-10 (1.4301)

N VERSIONS

Ref. No.	Name	Material	Reference Standards	
			USA	Europe
1	Pump Body	Stainless Steel	AISI 316	EN 10088-1-X2-CrNiMo17-12-2 (1.4401)
2	Impeller	Stainless Steel	AISI 316	EN 10088-1-X2-CrNiMo17-12-2 (1.4401)
3	Diffuser	Stainless Steel	AISI 316	EN 10088-1-X2-CrNiMo17-12-2 (1.4401)
4	Casing	Stainless Steel	AISI 316L	EN 10088-1-X2-CrNiMo17-12-2 (1.4404)
5	Shaft	Duplex Stainless Steel	UNS S 31803	EN 10088-1-X17-CrNiMoN22-5-3 (1.4507)
6	Adapter (up to 40HP)	Cast Iron	ASTM Class 25	EN 1561-GJL-200 (JL1040)
	Adapter (50HP and higher)		ASTM Class A536	EN 1561-GJL-500-7 (JS1050)
7	Wear Ring	PPS		
8	Coupling (up to 40HP)	Cast Iron	A384.0-F	EN 1706-AC-AlSi11Cu2(Fe) (AC46100)
	Coupling (50HP and higher)			
9-9A	Upper Head / Seal Housing	Stainless Steel	AISI 316	EN 10088-1-X2-CrNiMo17-12-2 (1.4401)
10	Mechanical Seal	Silicon Carbide / Carbon / Viton (opt. EPDM)		
11	Elastomers	Viton (opt. EPDM)		
12	Coupling Guard	Stainless Steel	AISI 304	EN 10088-1-X5-CrNi18-10 (1.4301)
13	Shaft Sleeve and Bushing	Tungsten Carbide		
14	Bushing for Diffuser	Carbon		
15	Fill/Drain Plugs	Stainless Steel	AISI 316	EN 10088-1-X2-CrNiMo17-12-2 (1.4401)
16	Tie Rods	Carbon Steel / Zinc Plated	A29 Gr. 1045	EN 10277
17	Adapter Ring	Stainless Steel	AISI 304	EN 10088-1-X5-CrNi18-10 (1.4301)

e-SV Mechanical Seals

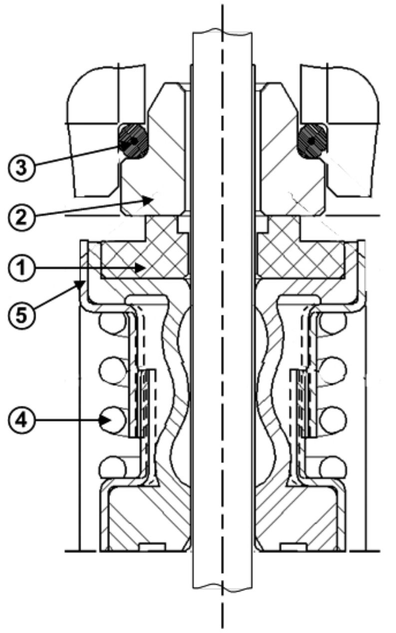

1 – 22SV

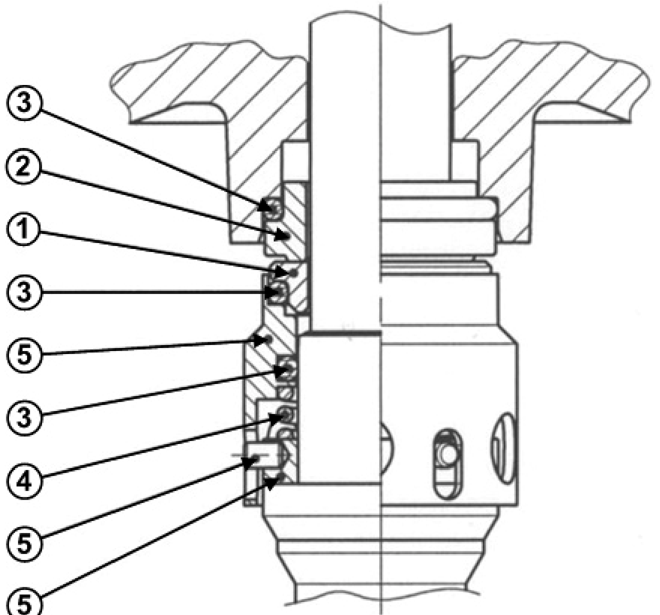

33 – 125SV

Pump	Code	Rotating Face 1	Stationary Face 2	Elastomers 3	Spring 4	Metal Components 5	Elastomer Temp Limits °F (°C)	Seal Temp Limits °F (°C)	Max. Working Pressure	Application
1SV thru 22SV	0	Carbon	Silicon Carbide Graphite Filled	Viton	316SS	316SS	-14 - 392°F (-10 - 200°C)	-22 - 250°F	580 psi (40 bar)	General Service
	2	Silicon Carbide Graphite Filled								Severe Duty
	4			EPR			-30 - 300°F (-34 - 150°C)			Severe Duty Boiler Feed
	6	Carbon								General Service Boiler Feed
	1	FDA Grade Carbon		AFLAS			-14 - 392°F (-10 - 200°C)	up to 300°F (149°C)	255 psi (17.6 bar)	Boiler Feed
33SV thru 125SV	0	Carbon	Silicon Carbide Graphite Filled	Viton	316SS	316SS	-14 - 392°F (-10 - 200°C)	-22 - 250°F (-30 - 120°C)	580 psi (40 bar)	General Service
	2	Silicon Carbide Graphite Filled								Severe Duty
	4			EPR			-22 - 250°F (-30 - 120°C)			Severe Duty Boiler Feed
	6	Carbon								General Service Boiler Feed

Pump	Rotating Face 1	Stationary Face 2	Elastomers 3	Spring 4	Sleeve 5	Set Screw 6	Locking Collar
33SV	Silicon Carbide	Carbon	Viton	316SS	316SS	300SS	316SS
46SV							
66SV		Silicon Carbide	EPR				
92SV							

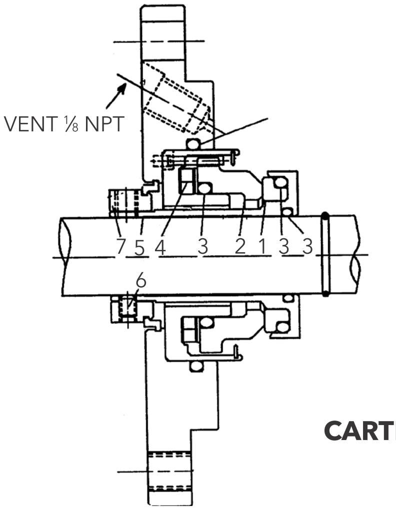

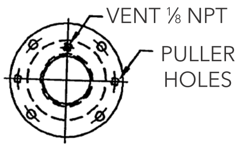

CARTRIDGE SEAL

Maximum Allowable Working Pressure Charts

1SV-22SV

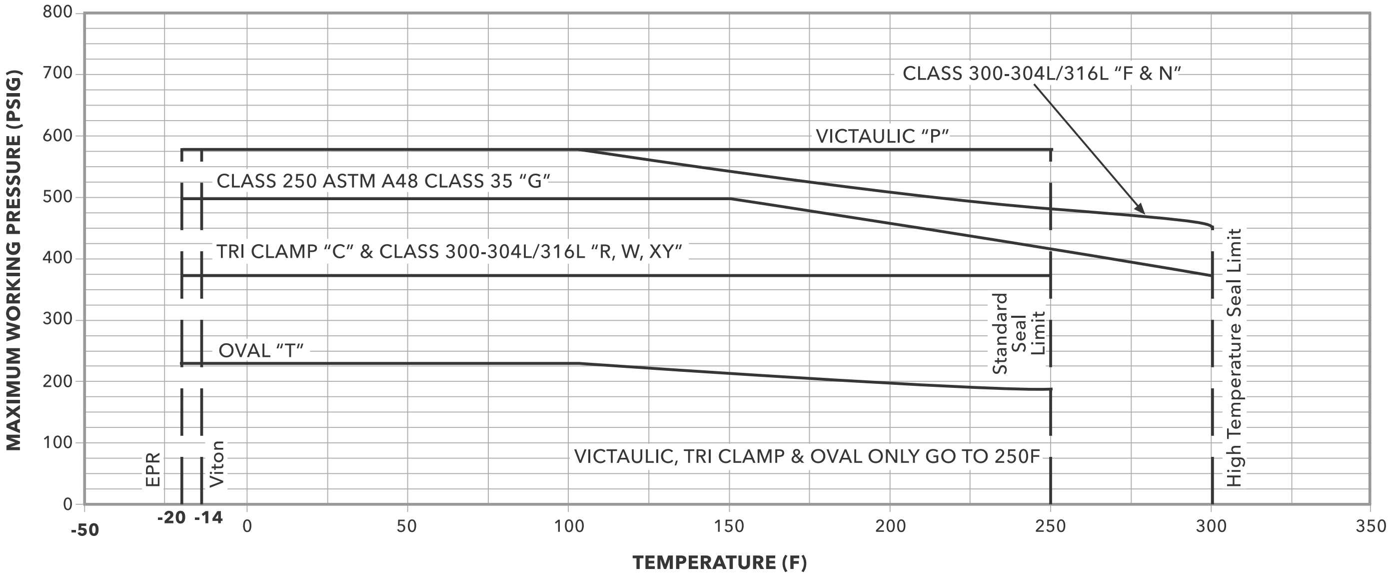

33SV-125SV

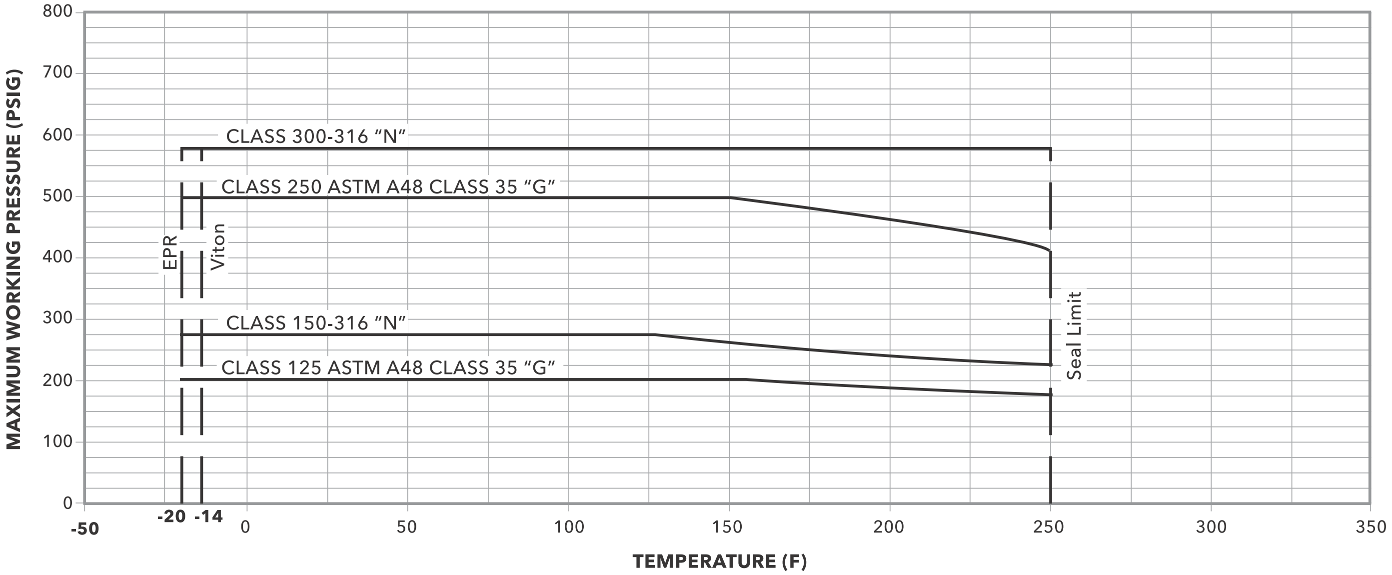

Maximum Inlet Pressure

The following table shows the maximum permissible inlet pressure. However, the actual inlet pressure + pressure against a closed valve must always be lower than the maximum permissible operating pressure.

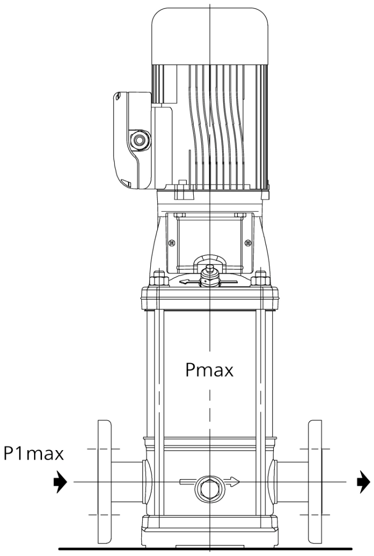

$p_{1max} \leq PN - pmax$

Having the following meaning of the symbols:

p_{max} = Maximum pressure delivered by the pump

p_{1max} = Maximum inlet pressure

PN = Maximum operating pressure

Motor Data – Starts per Hour / Minimum Run Time

HP	Maximum Starts per Hour*	Minimum run time between starts (seconds)
0.5	24	120
0.75	24	120
1	15	75
1.5	13	76
2	12	77
3	9	30
5	8	83
7.5	7	88
10	6	92
15	5	100
20	5	110
25	5	115
30	4	120
40	4	130
50	3	145
60	3	170
75	3	180

NOTE(S)

1) Recommended motor starts per hour and minimum run time calculated based on NEMA standards MG1-12.44 in accordance to manufacturers allowable tolerance for heat rise and insulation breakdown.
2) Applied voltage and frequency in accordance with NEMA MG1-12.44
3) Starts based on NEMA three phase design A and design B AC induction motors.
4) External load WK2 is equal to or less than the values listed in NEMA MG1-12.54
5) Applicable to all NEMA (JM, JP, T and TC frame) motors used for Goulds Water Technology products.
6) Applicable to three phase motors only.

Motor Data

3500 RPM, 60Hz

HP	Phase	Voltage	FLA	Enclosure	Order No.	SF	Frame Size
½	1	115/208-230	7/4.1-3.5	DP	V04721	1.25	56C
		115/208-230		TEFC	V04722	1.25	
	3	208-230/460	2.6-2/1	DP	V04A32E1BB3S	1.25	
		575	0.8		V04779	1.25	
		208-230/460	1.5/.75	DPE	V04A32E4BB2S	1.25	
		230/460	2.6-2/1	TEFC	V04A32F2BB3S	1.25	
		575	0.8		V04789	1.25	
		208-230/460	1.5/.75	TPE	V04A32E5BB3S	1.25	
		208-230/460	2.4-2.2/1.1	XP	V04A32E3BB1S	1.00	
¾	1	115/208-230	9.4/5.8-4.7	DP	V05721	1.25	
		115/208-230	9.6/6.1-4.8	TEFC	V05A12A2BB3S	1.25	
	3	230/460	2.7-2.6/1.3	DP	V05A32F1BB3S	1.25	
		575	0.96		V05779	1.25	
		208-230/460	2.7-2.6/1.3	DPE	V05A32E4BB2S	1.25	
		208-230/460		TEFC	V05A32E2BB3S	1.25	
		575	.96		V05789	1.25	
		208-230/460	2.5-2.2/1.1	TPE	V05A32E5BB3S	1.25	
		208-230/460	2.7-2.6/1.3	XP	V05A32E3BB1S	1.00	
1	1	115/208-230	15/7.9-7.5	DP	V06721	1.25	
		115/230	12/6	TEFC	V06A12B2BB3S	1.25	
	3	208-230/460	3.7-3.6/1.8	DP	V06A32E1BB3S	1.25	
		575	1.4		V06A32H1BB2S	1.25	
		208-230/460	3.7-3.6/1.8	DPE	V06A32E4BB2S	1.25	
		208-230/460		TEFC	V06A32E2BB3S	1.25	
		575	1.4		V06A32H2BB3S	1.25	
		230/460	2.8/1.4	TPE	V06A32F5BB3S	1.25	
		208-230/460	3.7-3.6/1.8	XP	V06A32E3BB1S	1.00	
1½	1	115/208-230	12.8/7-6.4	DP	V07721	1.15	
		115/208-230	16/8.4-8	TEFC	V07722	1.15	
	3	208-230/460	4.9-4.6/2.3	DP	V07A32E1BB2S	1.15	
		575	1.8		V07A32H1BB2S	1.15	
		208-230/460	4.5-4.2/2.1	DPE	V07741PE	1.15	
		208-230/460	4.9-4.6/2.3	TEFC	V07A32E2BB2S	1.15	
		575	1.8		V07789	1.15	
		208-230/460	4.3-4/2	TPE	V07742PE	1.15	
		208-230/460	5-4.6/2.3	XP	V07743	1.00	

Motor Data

3500 RPM, 60Hz

HP	Phase	Voltage	FLA	Enclosure	Order No.	SF	Frame Size
2	1	115/208-230	26/12.4-13	DP	V08721	1.15	56C
		115/208-230	23/12-11.5	TEFC	V08722	1.15	
		575	2.2		V08779	1.15	
		208-230/460	5.5-5/2.5	DPE	V08A32E4BB2S	1.15	
		208-230/460	6.2-5.8/2.9	TEFC	V08A32E2BB2S	1.15	
		575	2.2		V08A32H2BB2S	1.15	
		208-230/460	5.4-5/2.5	TPE	V08A32E5BB2S	1.15	
		208-230/460	5.7-5.4/2.7	XP	V08743	1.00	
3	1	208-230	13.9-13	DP	V09721	1.15	
		115/208-230	26/13.8-13	TEFC	V09A12A2BB2S	1.15	
		575	3.2		V09A32H1BB2S	1.15	
		230/460	8-7.4/3.7	DPE	V09A32F4BB2S	1.15	
		208-230/460	8.1-7.6/3.8	TEFC	V09A32E2BB2S	1.15	
		575	3		V09A32H2BB2S	1.15	
		208-230/460	7/3.5	TPE	V09A32E5BD2S	1.15	182TC
		208-230/460	7.8-7.4/3.7	XP	V09743	1.00	56C
5	1	208-230	24-23	DP	V10721A	1.15	184TC
		208-230	23.5-21.7	TEFC	V10A12D2BD2S	1.15	
	3	208-230/460	13.1-11.5/5.7	DP	V10A32E1BD2S	1.15	182TC
		575	4.8		V10A32H1BD2S	1.15	
		208-230/460	12.3-11.2/5.6	DPE	V10741APE	1.15	184TC
		208-230/460	13.2-12/6	TEFC	V10A32E2BD2S	1.15	
		575	4.8		V10A32H2BD2S	1.15	
		230/460	11.2/5.6	TPE	V10A32F5BD2S	1.15	
		208-230/460	13.2-12/6	XP	V10A32E3BD1S	1.00	
7½	1	230	29	DP	V11721	1.15	213TC
		230	33	TEFC *	V11722	1.15	
	3	208-230/460	19-18/9	DP	V11A32E1BD2S	1.15	184TC
		575	7.2		V11A32H1BB2S	1.15	
		208-230/460	18.5-16.8/8.4	DPE	V11741APE	1.15	
		208-230/460	18.5-17.4/8.7	TEFC	V11A32E2BD2S	1.15	
		575	7		V11A32H2BD2S	1.15	
		230/460	17.8/8.9	TPE	V11742APE	1.15	213TC
		230/460	17.6/8.8	XP	V11743A	1.00	184TC

Motor Data

3500 RPM, 60Hz

HP	Phase	Voltage	FLA	Enclosure	Order No.	SF	Frame Size
10	1	208-230	48-46	DP	V12A12C1BE2S	1.15	215TC
		208-230	42-40	TEFC *	V12722	1.15	
	3	208-230/460	25.6-23.2/11.6	DP	V12A32E1BE2S	1.15	213TC
		575	10		V12A32H1BE2S	1.15	
		208-230/460	24-23/11.5	DPE	V12A32E4BE2S	1.15	
		208-230/460	26.2-23.8/11.9	TEFC	V12A32E2BE2S	1.15	215TC
		575	9.6		V12789	1.15	
		230/460	23.8/11.9	TPE	V12A32F5BE2S	1.15	
		208-230/460	28-26/13	XP	V12743	1.00	
15		208-230/460	39-37/18.5	DP	V13A32E1BE2S	1.15	
		575	14.5		V13779	1.15	
		208-230/460	36.7-34/17	DPE	V13A32E4BE2S	1.15	
		208-230/460	38-35/17.5	TEFC	V13A32E2BK2S	1.15	254TC
		575	14		V13A32H2BK2S	1.15	
		208-230/460	37-34.4/17.2	TPE	V13A32E5BK2S	1.15	
		208-230/460	37-33.6/16.8	XP	V13A32E3BK2S	1.00	
20		230/460	46/23	DP	V14A32F1BK2S	1.15	
		575	18		V14A32H1BK2S	1.15	
		230/460	58/29	DPE	V14A32F4BK2S	1.15	
		208-230/460	50-46/23	TEFC	V14742	1.15	256TC
		575	18.5		V14A32H2BK2S	1.15	
		208-230/460	49-45/22.5	TPE	V14A32E5BK2S	1.15	
		208-230/460	49-45/22.5	XP	V14743	1.00	
25		208-230/460	65-60/30	DP	V15A32E1BK2S	1.15	254TC
		575	24		V15A32H1BK2S	1.15	
		230/460	58/29	DPE	V15A32F4BK2S	1.15	256TC
		208-230/460	61-57/28.5	TEFC	V15A32E2BL2S	1.15	284TC
		575	22.5		V15789	1.15	
		208-230/460	60-56/28	TPE	V15742PE	1.15	
		230/460	57/28.5	XP	V15743	1.15	
30		230/460	70/35	DP	V16741	1.15	
		575	27		V16A32H1BB2S	1.15	
		230/460	68/34	DPE	V16A32F4BL2S	1.15	286TC
		208-230/460	74-68/34	TEFC	V16742	1.15	
		575	27		V16A32H2BL2S	1.15	
		208-230/460	76-68/34	TPE	V16A32E5BL2S	1.15	284TC
		208-230/460	74-70/35	XP	V16743	1.15	286TC

Motor Data

3500 RPM, 60Hz

HP	Phase	Voltage	FLA	Enclosure	Order No.	SF	Frame Size
40		208-230/460	102-96/48	DP	V17741	1.15	286TC
		575	37		V17A32H1BL2S	1.15	
		230/460	90/45	DPE	V17A32F4BL2S	1.15	
		208-230/460	100-90/45	TEFC	V17A32E2BL2S	1.15	
		575	35		V17789	1.15	
		230/460	95.7-88/44	TPE	X17A32F5BM2S	1.15	324TSC
		208-230/460	100-90/45	XP	X17A32F3BM2S	1.15	
50	3	230/460	118/59	DP	V18741S	1.15	324TSC
		575	48		V18779S	1.15	
		230/460	110/55	DPE	V18741SPE	1.15	
		208-230/460	126-112/56	TEFC	X18A32E2BM2S	1.15	326TSC
		575	45		V18789S	1.15	
		208-230/460	119-108/54	TPE	X18A32E5BM2S	1.15	
		230/460	112/56	XP	X18A32F3BM2S	1.15	
60		208-230/460	148-136/68	DP	V19741S	1.15	
		575	55		V19779S	1.15	
		230/460	130/65	DPE	V19741SPE	1.15	
		230/460	138/69	TEFC	X19A32F2BP2S	1.15	364TSC
		575	56		V19789S	1.15	
		208-230/460	150-134/67	TPE	X19A32F5BP2S	1.15	
		230/460	134/67	XP	X19A32F3BP2S	1.15	
75		230/460	176/88	DP	V20741S	1.15	
		575	75		V20779S	1.15	
		230/460	174/87	DPE	X20A32F4BP2S	1.15	
		208-230/460	182-166/83	TEFC	X20A32F2BP2S	1.15	
		575	67		V20789S	1.15	
		230/460	166/83	TPE	X20A32F5BP2S	1.15	365TSC
		230/460		XP	X20A32F3BP2S	1.15	

NOTES:

* Standard DP and TE Motors have a 1.15 Service Factor except for 7.5 HP and 10 HP, single-phase, TE Motors which are 1.0 S.F.

EXPLOSION-PROOF (XP) Motors above have a 1.15 Service Factor, min. Class B insulation, and a UL Class 1, Div. 1, Group D rating.

For availability consult factory. Goulds Water Technology choice of vendor.

Dimensions and Weights 10SV Series 3500 RPM 60 Hz

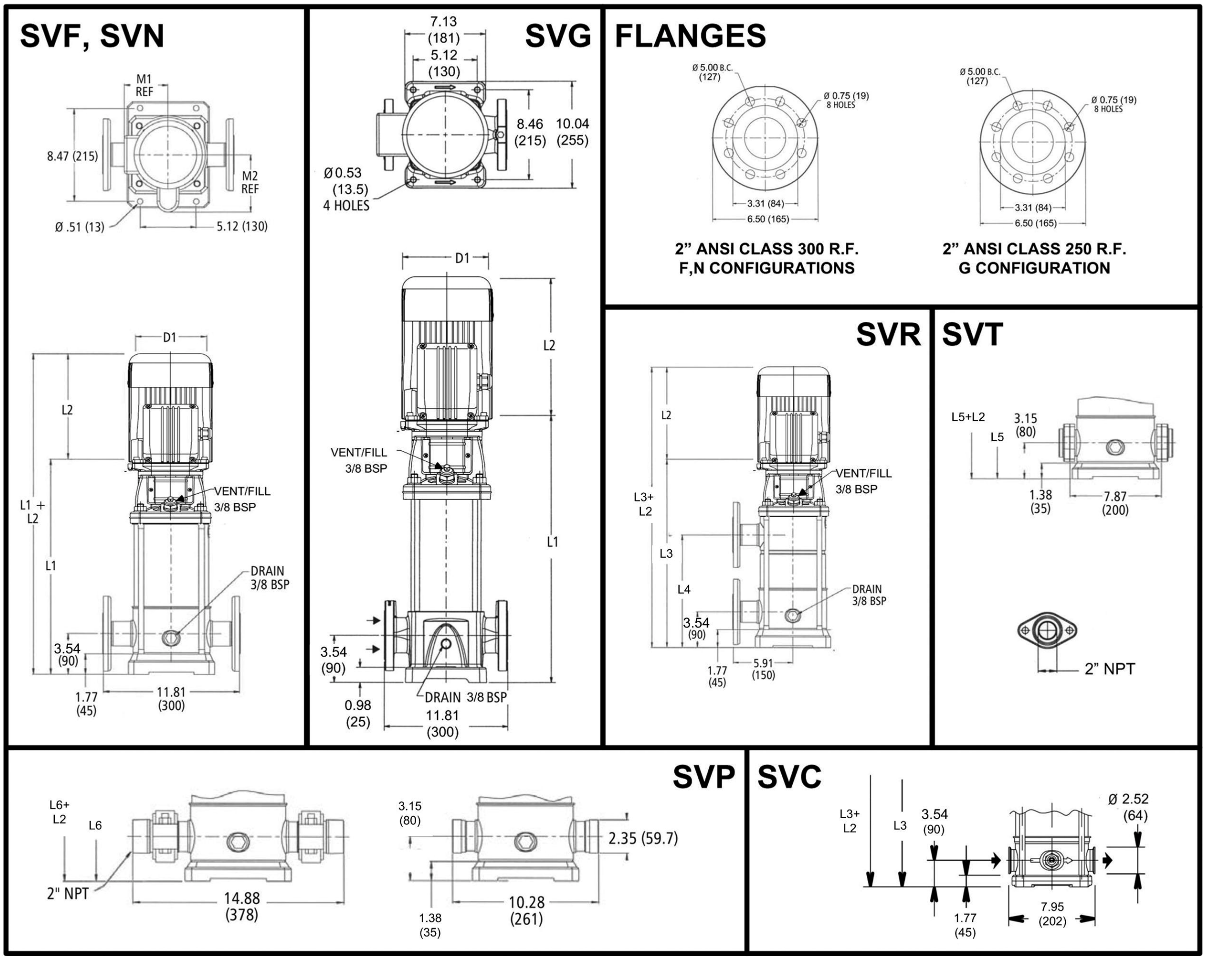

All dimensions are in inches (mm).

10SV SERIES – 60Hz, 3500 RPM ODP/TEFC Enclosures

Pump Type Stages	Motor					Dimensions (in)																Weight (lbs.)								
	HP	NEMA Frame				L1	L2				L3	L4	L5	L6	M (Ref.)	D1 (max.)				D2	Pump Only	Motor				Pump/Motor			
		ODP 1Ø	TEFC 1Ø	ODP 3Ø	TEFC 3Ø		ODP 1Ø	TEFC 1Ø	ODP 3Ø	TEFC 3Ø						ODP 1Ø	TEFC 1Ø	ODP 3Ø	TEFC 3Ø			ODP 1Ø	TEFC 1Ø	ODP 3Ø	TEFC 3Ø	ODP 1Ø	TEFC 1Ø	ODP 3Ø	TEFC 3Ø
10SV-01	0.75	56C				16.56	10.79	9.91	9.16	9.29	-	-	16.17	16.17	5.19	6.19	6.19	6.19	6.19	4.13	36	27	29	21	21	63	65	57	57
10SV-02	2					16.56	11.18	12.06	11.16	10.79	-	-	16.17	16.17	5.74	7.19	7.19	6.19	6.19	4.72	38	43	51	32	33	81	89	70	71
10SV-03	3					17.82	11.57	13.44	11.18	11.16	-	-	17.43	17.43	5.75	6.50	7.19	7.16	7.19	5.51	40	49	64	41	44	89	104	81	84
10SV-04	5	184TC		182TC	184TC	19.58	13.93	15.43	12.55	13.93	-	-	19.19	19.19	6.87	8.88	8.86	9.02	8.86	5.51	46	81	92	62	69	127	138	108	115
10SV-05						20.84	13.93	15.43	12.55	13.93	20.84	10.20	20.45	20.45	6.87	8.88	8.86	9.02	8.86	5.51	48	81	92	62	69	129	140	110	117
10SV-06						22.10	13.93	15.43	12.55	13.93	22.10	11.46	21.71	21.71	6.87	8.88	8.86	9.02	8.86	5.51	50	81	92	62	69	131	142	112	119
10SV-07	7.5	213TC		184TC		23.36	13.88	15.53	13.93	15.43	23.36	12.72	22.97	22.97	8.05	8.89	10.62	8.88	8.86	5.51	52	100	120	75	85	152	172	127	137
10SV-08						24.62	13.88	15.53	13.93	15.43	24.62	13.98	24.22	24.22	8.05	8.89	10.62	8.88	8.86	5.51	54	100	120	75	85	154	174	129	139
10SV-09						25.88	13.88	15.53	13.93	15.43	25.88	15.24	25.48	25.48	8.05	8.89	10.62	8.88	8.86	5.51	56	100	120	75	85	156	176	131	141
10SV-10	10	215TC		213TC	215TC	27.71	16.63	16.68	15.55	15.51	27.71	16.50	-	27.31	8.77	10.62	10.18	10.18	10.28	5.51	66	132	145	107	122	198	211	173	188
10SV-11						28.97	16.63	16.68	15.55	15.51	28.97	17.76	-	28.57	8.77	10.62	10.18	10.18	10.28	5.51	68	132	145	107	122	200	213	175	190
10SV-12						29.44	16.63	16.68	15.55	15.51	29.44	19.02	-	29.05	8.77	10.62	10.18	10.18	10.28	5.51	70	132	145	107	122	202	215	177	192
10SV-13						31.51	16.63	16.68	15.55	15.51	31.51	20.28	-	31.11	8.77	10.62	10.18	10.18	10.28	5.51	75	132	145	107	122	207	220	182	197
10SV-14						32.85	16.63	16.68	15.55	15.51	32.85	21.54	-	32.45	8.77	10.62	10.18	10.18	10.28	5.51	77	132	145	107	122	209	222	184	199
10SV-15	15	-		215TC	254TC	34.66	-	-	15.55	16.57	-	-	-	34.26	9.22	-	-	10.18	10.28	5.51	84	-	-	125	195	-	-	209	279
10SV-16						35.92	-	-	15.55	16.57	-	-	-	35.52	9.22	-	-	10.18	10.28	5.51	86	-	-	125	195	-	-	211	281
10SV-17						37.18	-	-	15.55	16.57	-	-	-	36.78	9.22	-	-	10.18	10.28	5.51	88	-	-	125	195	-	-	213	283
10SV-18						38.44	-	-	15.55	16.57	-	-	-	38.04	9.22	-	-	10.18	10.28	5.51	90	-	-	125	195	-	-	215	285
10SV-19						39.78	-	-	15.55	16.57	-	-	-	39.38	9.22	-	-	10.18	10.28	5.51	92	-	-	125	195	-	-	217	287
10SV-20	20			254TC	256TC	40.96	-	-	16.66	20.08	-	-	-	40.56	9.5	-	-	10.18	13.13	5.51	94	-	-	144	285	-	-	238	379

Performance Curve **10SV 3500 RPM** **60 Hz**

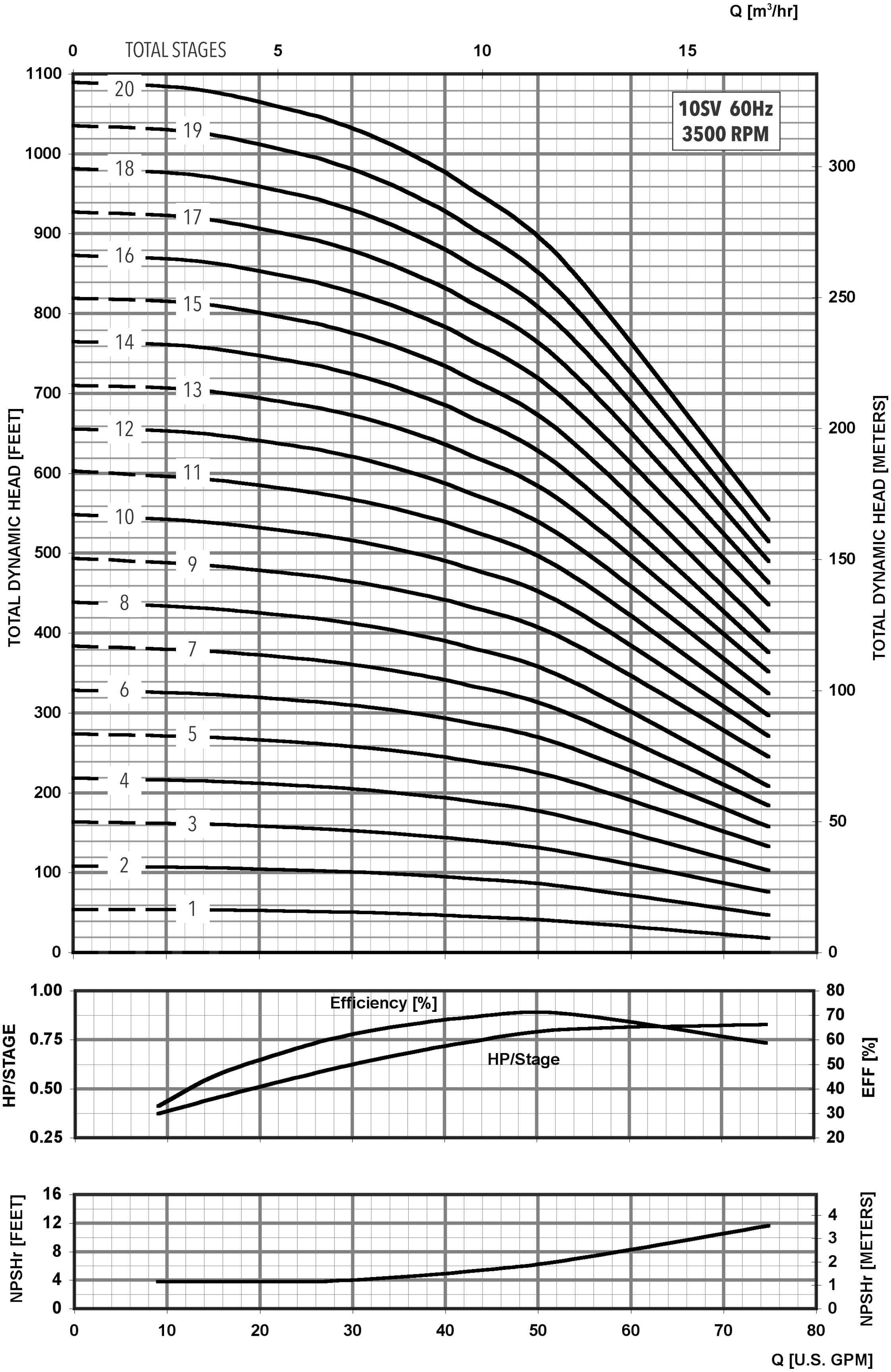

MINIMUM FLOW RATE: 9 GPM [2 m³/hr]

Dimensions and Weights — 33SV Series 3500 RPM — 60 Hz

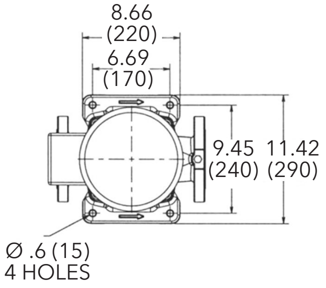

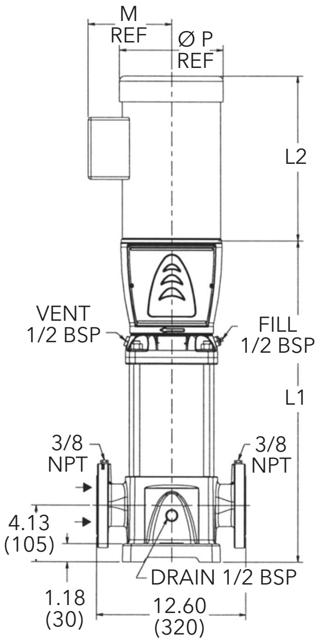

All dimensions are in inches (mm).

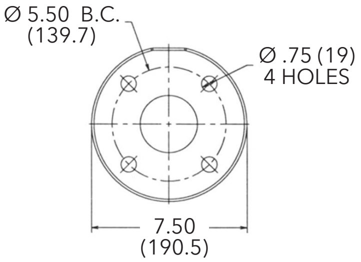

Cast Iron
2½" Class 125 F.F.

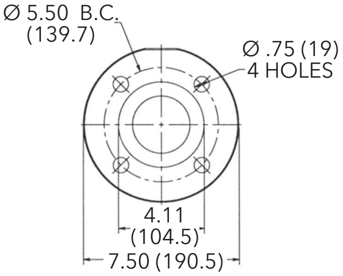

316SS
2½" Class 150 R.F.

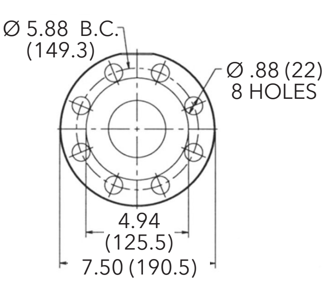

Cast Iron
2½" Class 250 R.F.

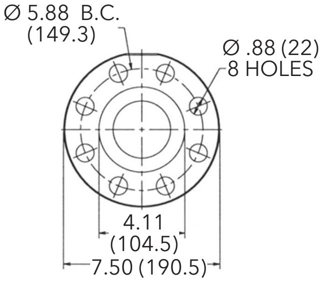

316SS
2½" Class 300 R.F.

33SV SERIES – 60Hz, 3500 RPM ODP/TEFC Enclosures

Pump Type Stages	Motor					Dimensions (in)											Weight (lbs.)								
	HP	NEMA Frame				L1	L2				M (Ref.)	D1 (max.)				D2	Pump Only	Motor				Pump/Motor			
		ODP 1Ø	TEFC 1Ø	ODP 3Ø	TEFC 3Ø		ODP 1Ø	TEFC 1Ø	ODP 3Ø	TEFC 3Ø		ODP 1Ø	TEFC 1Ø	ODP 3Ø	TEFC 3Ø			ODP 1Ø	TEFC 1Ø	ODP 3Ø	TEFC 3Ø	ODP 1Ø	TEFC 1Ø	ODP 3Ø	TEFC 3Ø
33SV-1	5	184TC		182TC	184TC	20.62	13.93	15.43	12.55	13.93	6.87	8.88	8.86	9.02	8.86	5.51	132	81	92	62	69	213	224	194	201
33SV-2/2	7.5	213TC		184TC		23.58	13.88	15.53	13.93	15.43	8.05	8.89	10.62	8.88	8.86	5.51	143	100	120	75	85	243	263	218	228
33SV-2/1	10	215TC		213TC	215TC	23.58	16.63	16.68	15.55	15.51	8.77	10.62	10.18	10.18	10.28	4.13	143	132	145	107	122	275	288	250	265
33SV-2						23.58	16.63	16.68	15.55	15.51	8.77	10.62	10.18	10.18	10.28	4.13	143	132	145	107	122	275	288	250	265
33SV-3/2	15	-	-	215TC	254TC	26.54	-	-	15.55	16.57	9.22	-	-	10.18	10.28	4.72	152	-	-	125	195	-	-	277	347
33SV-3/1		-	-			26.54	-	-	15.55	16.57	9.22	-	-	10.18	10.28	4.72	152	-	-	125	195	-	-	277	347
33SV-3		-	-			26.54	-	-	15.55	16.57	9.22	-	-	10.18	10.28	4.72	152	-	-	125	195	-	-	277	347
33SV-4/2	20	-	-	254TC	256TC	29.50	-	-	16.66	20.08	9.50	-	-	10.18	13.13	5.51	161	-	-	144	285	-	-	305	446
33SV-4/1		-	-			29.50	-	-	16.66	20.08	9.50	-	-	10.18	13.13	5.51	161	-	-	144	285	-	-	305	446
33SV-4		-	-			29.50	-	-	16.66	20.08	9.50	-	-	10.18	13.13	5.51	161	-	-	144	285	-	-	305	446
33SV-5/2	25	-	-	254TC	284TC	32.44	-	-	21.44	19.54	12.94	-	-	11.63	12.94	5.51	172	-	-	185	283	-	-	357	455
33SV-5/1		-	-			32.44	-	-	21.44	19.54	12.94	-	-	11.63	12.94	5.51	172	-	-	185	283	-	-	357	455
33SV-5		-	-			32.44	-	-	21.44	19.54	12.94	-	-	11.63	12.94	5.51	186	-	-	185	283	-	-	371	469
33SV-6/2	30	-	-	284TC	286TC	35.40	-	-	21.75	19.54	12.21	-	-	13.25	12.94	5.51	194	-	-	296	382	-	-	490	576
33SV-6/1		-	-			35.40	-	-	21.75	19.54	12.21	-	-	13.25	12.94	5.51	194	-	-	296	382	-	-	490	576
33SV-6		-	-			35.40	-	-	21.75	19.54	12.21	-	-	13.25	12.94	5.51	194	-	-	296	382	-	-	490	576
33SV-7/2	40	-	-	286TC		38.55	-	-	21.75	23.18	13.11	-	-	13.25	15.56	5.51	204	-	-	315	446	-	-	519	650
33SV-7/1		-	-			38.55	-	-	21.75	23.18	13.11	-	-	13.25	15.56	5.51	204	-	-	315	446	-	-	519	650
33SV-7		-	-			38.55	-	-	21.75	23.18	13.11	-	-	13.25	15.56	5.51	204	-	-	315	446	-	-	519	650
33SV-8/2		-	-			41.30	-	-	21.75	23.18	13.11	-	-	13.25	15.56	5.51	221	-	-	315	446	-	-	536	667
33SV-8/1		-	-			41.30	-	-	21.75	23.18	13.11	-	-	13.25	15.56	5.51	229	-	-	315	446	-	-	544	675
33SV-8		-	-			41.30	-	-	21.75	23.18	13.11	-	-	13.25	15.56	5.51	229	-	-	315	446	-	-	544	675
33SV-9/2	50	-	-	324TSC	326TSC	44.25	-	-	22.75	23.19	12.21	-	-	13.03	15.69	5.51	238	-	-	320	450	-	-	558	688
33SV-9/1		-	-			44.25	-	-	22.75	23.19	12.21	-	-	13.03	15.69	5.51	238	-	-	320	450	-	-	558	688
33SV-9		-	-			44.25	-	-	22.75	23.19	12.21	-	-	13.03	15.69	5.51	238	-	-	320	450	-	-	558	688
33SV-10/2		-	-			47.20	-	-	22.75	23.19	12.21	-	-	13.03	15.69	5.51	249	-	-	320	450	-	-	569	699
33SV-10/1		-	-			47.20	-	-	22.75	23.19	12.21	-	-	13.03	15.69	5.51	249	-	-	320	450	-	-	569	699
33SV-10		-	-			47.20	-	-	22.75	23.19	12.21	-	-	13.03	15.69	5.51	249	-	-	320	450	-	-	569	699

Performance Curve

33SV 3500 RPM

60 Hz

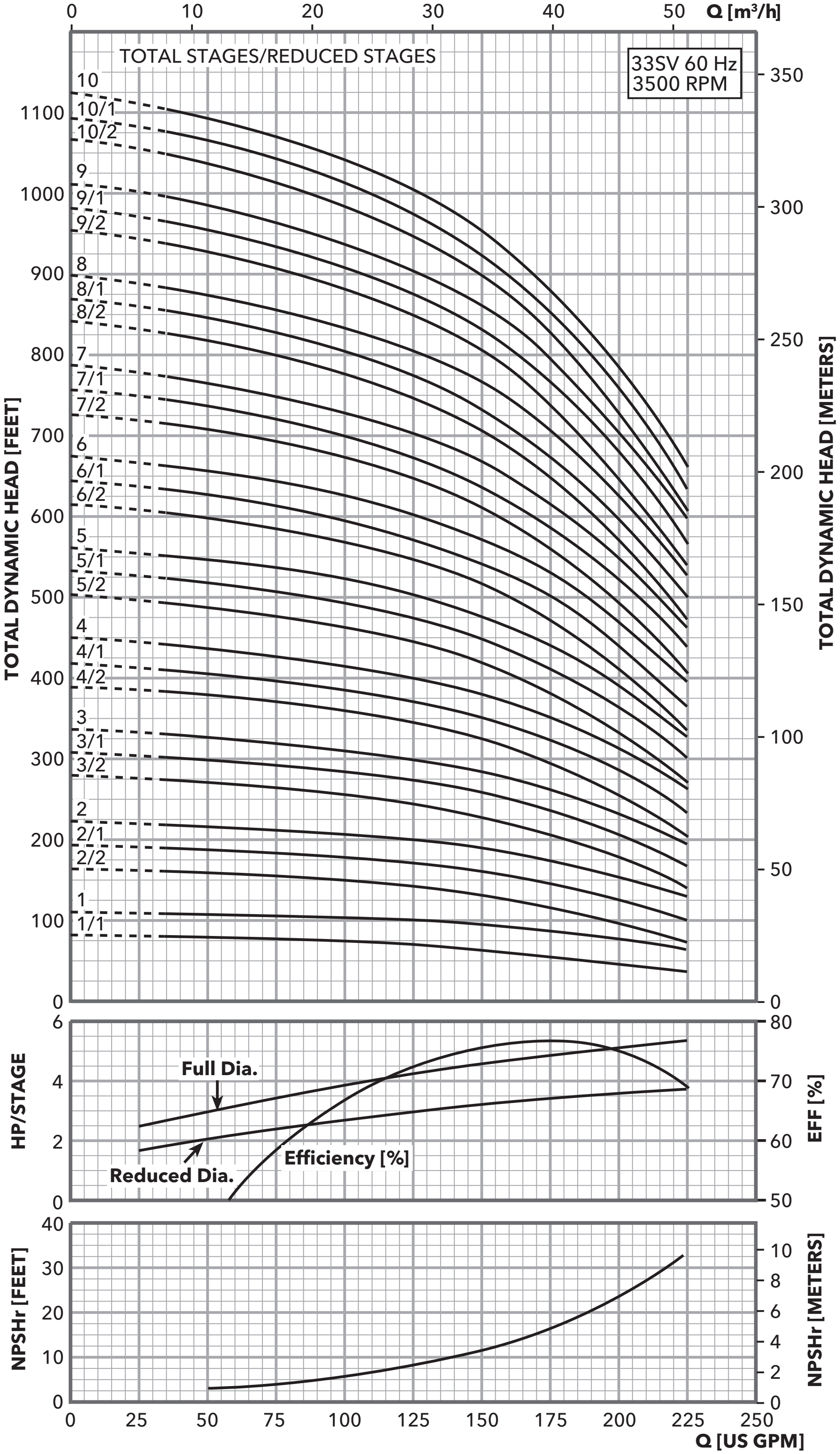

MINIMUM FLOW RATE: 35 GPM [8 m³/hr]

Dimensions and Weights

125SV Series 3500 RPM

60 Hz

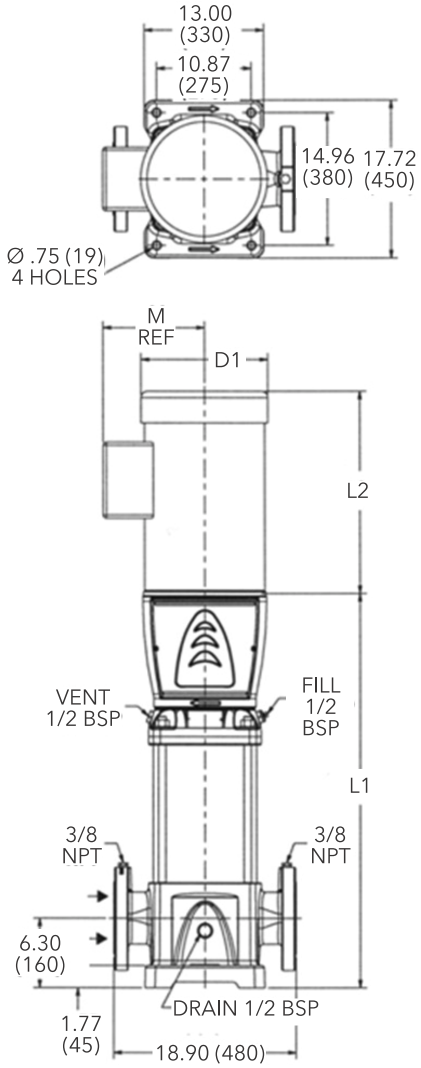

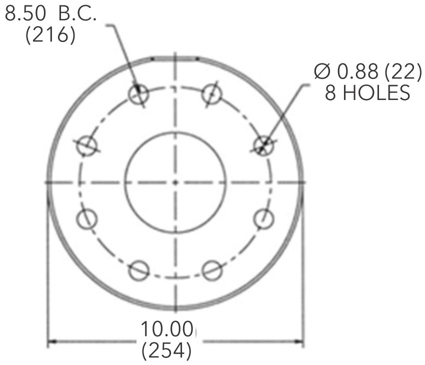

Cast Iron
5" Class 125 F.F.

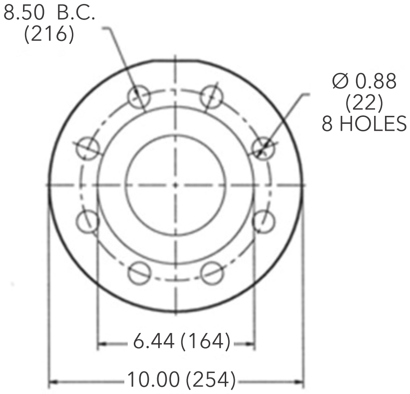

316SS
5" Class 150 R.F.

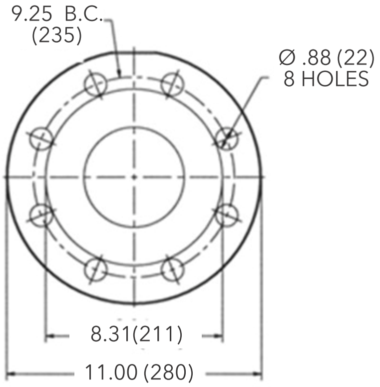

Cast Iron
5" Class 250 R.F.

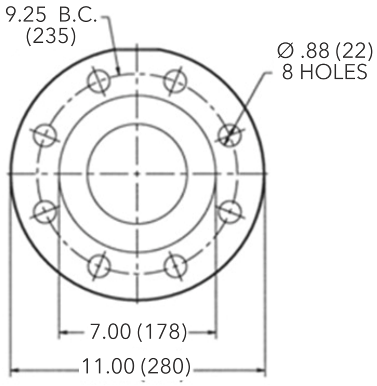

316SS
5" Class 300 R.F.

All dimensions are in inches (mm).

125SV SERIES – 60Hz, 3500 RPM ODP/TEFC Enclosures

Pump Type	Motor					Dimensions (in)														Weight (lbs.)								
	HP	NEMA Frame				L1	L2				L3	L4	L5	L6	M (Ref.)	D1 (max.)				D2	Pump	Motor				Pump/Motor			
		ODP 1Ø	TEFC 1Ø	ODP 3Ø	TEFC 3Ø		ODP 1Ø	TEFC 1Ø	ODP 3Ø	TEFC 3Ø						ODP 1Ø	TEFC 1Ø	ODP 3Ø	TEFC 3Ø			ODP 1Ø	TEFC 1Ø	ODP 3Ø	TEFC 3Ø	ODP 1Ø	TEFC 1Ø	ODP 3Ø	TEFC 3Ø
125SV-1/0C	15	-	-	215TC	254TC	27.30	-	-	15.55	16.57	-	-	-	-	9.22	-	-	10.18	10.28	4.72	256	-	-	125	195	-	-	381	451
125SV-2/0C	30	-	-	284TC	286TC	34.57	-	-	21.75	19.54	-	-	-	-	12.21	-	-	13.25	12.94	5.51	289	-	-	296	382	-	-	585	671
125SV-3/3A	40	-	-	286TC	286TC	40.47	-	-	21.75	23.18	-	-	-	-	13.11	-	-	13.25	15.56	5.51	315	-	-	315	446	-	-	630	761
125SV-4/3B	50	-	-	324TSC	326TSC	46.40	-	-	22.75	23.19	-	-	-	-	12.21	-	-	13.03	15.69	5.51	355	-	-	320	450	-	-	675	805
125SV-5/5B	60	-	-	324TSC	326TSC	52.30	-	-	22.75	30.69	-	-	-	-	14.95	-	-	13.03	19.25	5.51	379	-	-	372	689	-	-	751	1068
125SV-5/0C	75	-	-	364TSC	365TSC	52.28	-	-	24.38	30.69	-	-	-	-	14.95	-	-	15.13	19.25	5.51	379	-	-	447	747	-	-	826	1126

Performance Curve **125SV 3500 RPM** **60 Hz**

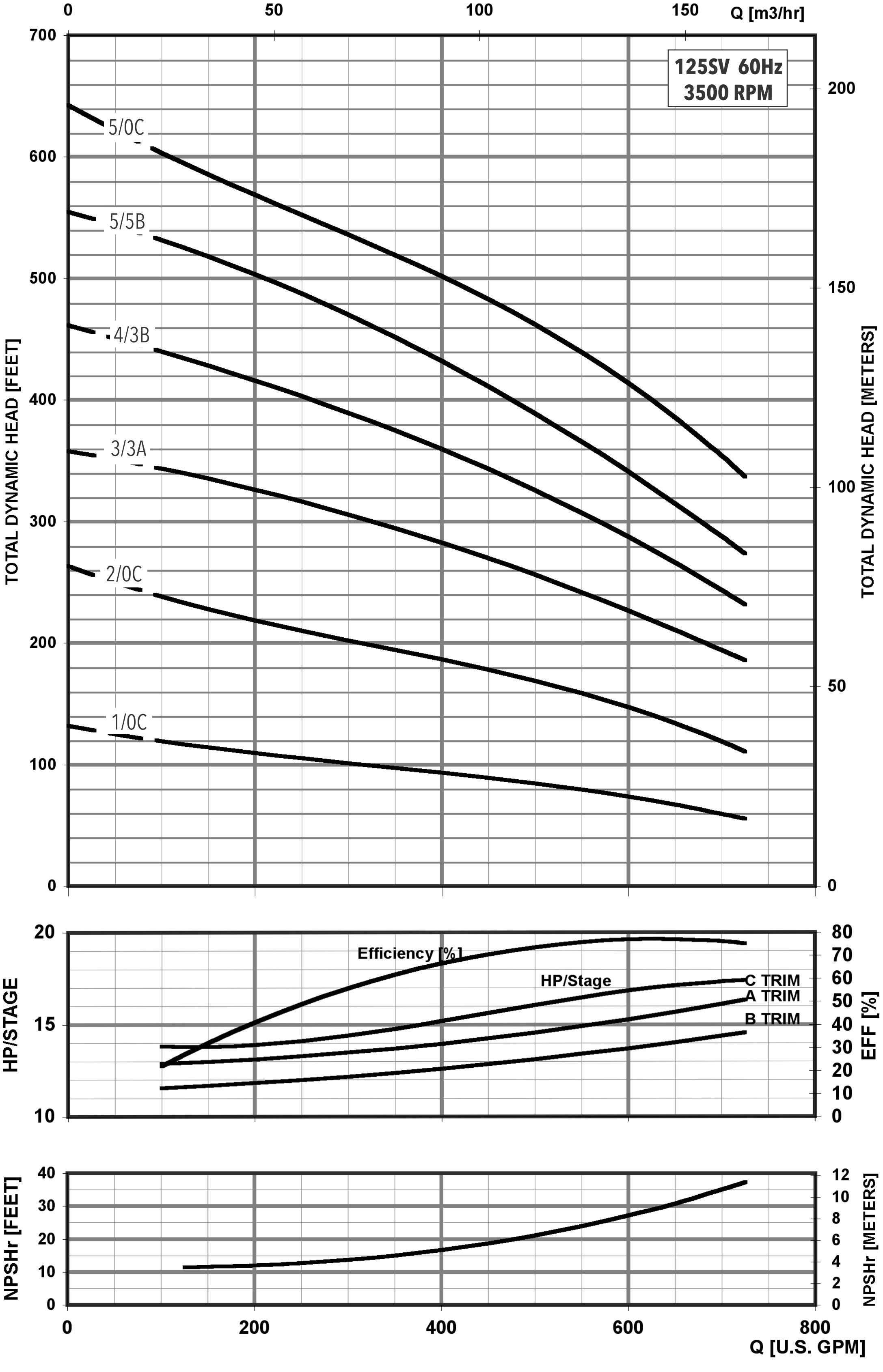

MINIMUM FLOW RATE: 100 GPM [20 m³/hr]

Dimensions and Weights

1SV Series 1750 RPM

60 Hz

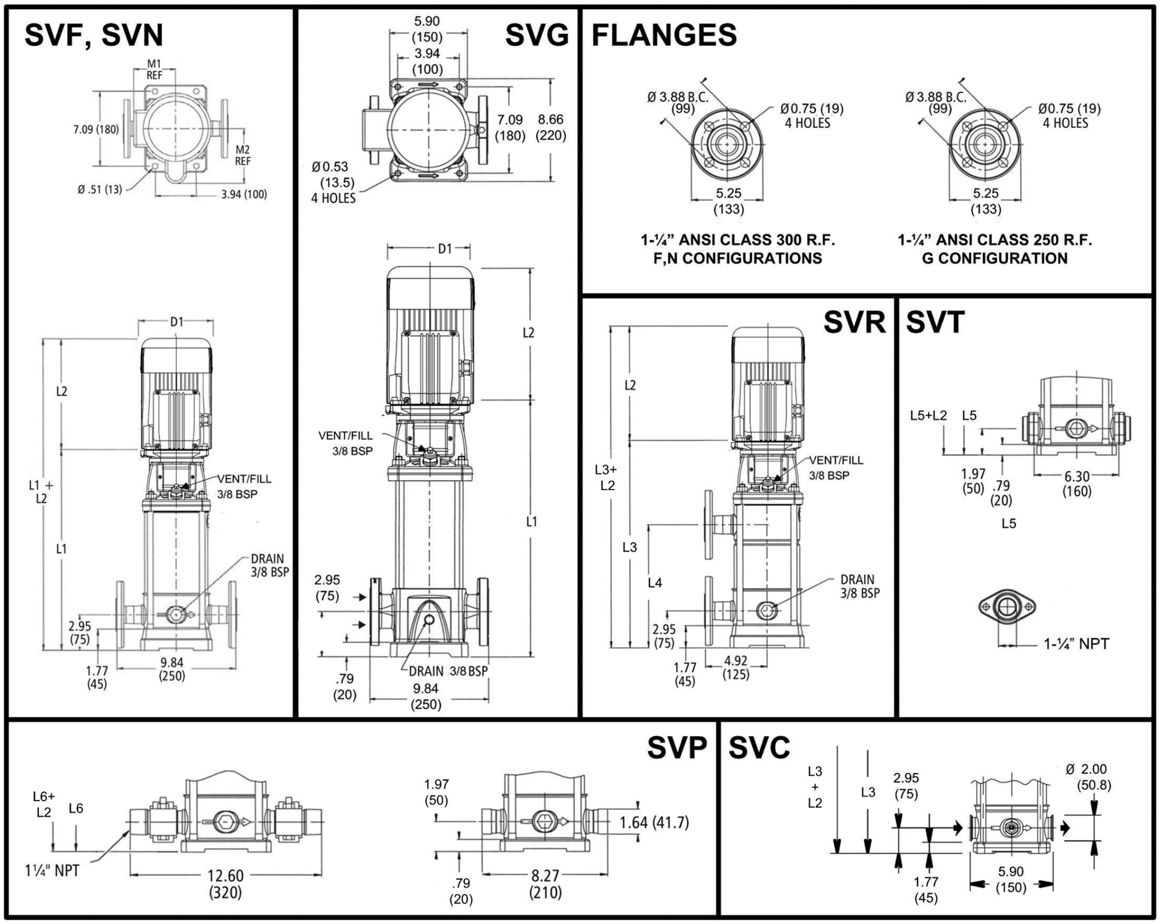

All dimensions are in inches (mm).

1SV SERIES – 60Hz, 1750 RPM ODP/TEFC Enclosures

Pump Type Stages	Motor					Dimensions (in)															Weight (lbs.)								
	HP	NEMA Frame				L1	L2				L3	L4	L5	L6	M (Ref.)	D1 (max.)				D2	Pump Only	Motor				Pump/Motor			
		ODP 1Ø	TEFC 1Ø	ODP 3Ø	TEFC 3Ø		ODP 1Ø	TEFC 1Ø	ODP 3Ø	TEFC 3Ø						ODP 1Ø	TEFC 1Ø	ODP 3Ø	TEFC 3Ø			ODP 1Ø	TEFC 1Ø	ODP 3Ø	TEFC 3Ø	ODP 1Ø	TEFC 1Ø	ODP 3Ø	TEFC 3Ø
1SV-02	0.5	56C				13.27	9.16	9.29	9.16	9.29	-	-	12.29	12.29	5.19	6.19	6.19	6.19	6.19	4.13	25	21	21	19	19	46	46	44	44
1SV-03						13.27	9.16	9.29	9.16	9.29	-	-	12.29	12.29	5.19	6.19	6.19	6.19	6.19	4.13	26	21	21	19	19	47	47	45	45
1SV-04						14.06	9.16	9.29	9.16	9.29	-	-	13.07	13.07	5.19	6.19	6.19	6.19	6.19	4.13	27	21	21	19	19	48	48	46	46
1SV-05						14.85	9.16	9.29	9.16	9.29	-	-	13.86	13.86	5.19	6.19	6.19	6.19	6.19	4.13	28	21	21	19	19	49	49	47	47
1SV-06						15.63	9.16	9.29	9.16	9.29	-	-	14.65	14.65	5.19	6.19	6.19	6.19	6.19	4.13	28	21	21	19	19	49	49	47	47
1SV-07						16.42	9.16	9.29	9.16	9.29	-	-	15.44	15.44	5.19	6.19	6.19	6.19	6.19	4.13	29	21	21	19	19	50	50	48	48
1SV-08						17.21	9.16	9.29	9.16	9.29	17.21	8.94	16.22	16.22	5.19	6.19	6.19	6.19	6.19	4.13	30	21	21	19	19	51	51	49	49
1SV-09						18.00	9.16	9.29	9.16	9.29	18.00	9.72	17.01	17.01	5.19	6.19	6.19	6.19	6.19	4.13	31	21	21	19	19	52	52	50	50
1SV-10						18.78	9.16	9.29	9.16	9.29	18.78	10.51	17.80	17.80	5.19	6.19	6.19	6.19	6.19	4.13	32	21	21	19	19	53	53	51	51
1SV-11						19.57	9.16	9.29	9.16	9.29	19.57	11.30	18.59	18.59	5.19	6.19	6.19	6.19	6.19	4.13	33	21	21	19	19	54	54	52	52
1SV-12						20.36	9.16	9.29	9.16	9.29	20.36	12.09	19.37	19.37	5.19	6.19	6.19	6.19	6.19	4.13	34	21	21	19	19	55	55	53	53
1SV-13						21.14	9.16	9.29	9.16	9.29	21.14	12.87	20.16	20.16	5.19	6.19	6.19	6.19	6.19	4.13	35	21	21	19	19	56	56	54	54
1SV-14						21.93	9.16	9.29	9.16	9.29	21.93	13.66	20.95	20.95	5.19	6.19	6.19	6.19	6.19	4.13	36	21	21	19	19	57	57	55	55
1SV-15						22.72	9.16	9.29	9.16	9.29	22.72	14.45	21.74	21.74	5.19	6.19	6.19	6.19	6.19	4.13	37	21	21	19	19	58	58	56	56
1SV-16						23.51	9.16	9.29	9.16	9.29	23.51	15.24	22.52	22.52	5.19	6.19	6.19	6.19	6.19	4.13	38	21	21	19	19	59	59	57	57
1SV-17						24.29	9.16	9.29	9.16	9.29	24.29	16.02	23.31	23.31	5.19	6.19	6.19	6.19	6.19	4.13	38	21	21	19	19	59	59	57	57
1SV-18						25.08	9.16	9.29	9.16	9.29	25.08	16.81	24.10	24.10	5.19	6.19	6.19	6.19	6.19	4.13	39	21	21	19	19	60	60	58	58
1SV-19						25.87	9.16	9.29	9.16	9.29	25.87	17.60	24.89	24.89	5.19	6.19	6.19	6.19	6.19	4.13	40	21	21	19	19	61	61	59	59
1SV-20						26.66	9.16	9.29	9.16	9.29	26.66	18.39	25.67	25.67	5.19	6.19	6.19	6.19	6.19	4.13	41	21	21	19	19	62	62	60	60
1SV-21						27.44	9.16	9.29	9.16	9.29	27.44	19.17	26.46	26.46	5.19	6.19	6.19	6.19	6.19	4.13	42	21	21	19	19	63	63	61	61
1SV-22						28.23	9.16	9.29	9.16	9.29	28.23	19.96	27.25	27.25	5.19	6.19	6.19	6.19	6.19	4.13	43	21	21	19	19	64	64	62	62
1SV-23						29.02	9.16	9.29	9.16	9.29	29.02	20.75	28.03	28.03	5.19	6.19	6.19	6.19	6.19	4.13	45	21	21	19	19	66	66	64	64
1SV-24						29.81	9.16	9.29	9.16	9.29	29.81	21.54	28.82	28.82	5.19	6.19	6.19	6.19	6.19	4.13	46	21	21	19	19	67	67	65	65
1SV-25						30.59	9.16	9.29	9.16	9.29	30.59	22.32	29.61	29.61	5.19	6.19	6.19	6.19	6.19	4.13	47	21	21	19	19	68	68	66	66
1SV-26						31.38	9.16	9.29	9.16	9.29	31.38	23.11	30.40	30.40	5.19	6.19	6.19	6.19	6.19	4.13	47	21	21	19	19	68	68	66	66
1SV-27						32.17	9.16	9.29	9.16	9.29	32.17	23.90	31.18	31.18	5.19	6.19	6.19	6.19	6.19	4.13	48	21	21	19	19	69	69	67	67
1SV-28						32.96	9.16	9.29	9.16	9.29	32.96	24.68	31.97	31.97	5.19	6.19	6.19	6.19	6.19	4.13	49	21	21	19	19	70	70	68	68
1SV-29						34.14	9.16	9.29	9.16	9.29	34.14	25.47	33.15	33.15	5.19	6.19	6.19	6.19	6.19	4.13	50	21	21	19	19	71	71	69	69
1SV-30						34.53	9.16	9.29	9.16	9.29	34.53	26.26	33.55	33.55	5.19	6.19	6.19	6.19	6.19	4.13	51	21	21	19	19	72	72	70	70

APPENDIX VIII

SUMMIT CLUB **Date: August 2022**
NORTH CASTLE, NY

CALCULATION OF TOTAL DYNAMIC HEAD - WELL 1

Calculated by: Michael Shortell
Reviewed by: Stephen Rupar

PROBLEM STATEMENT

Calculate the total dynamic head from Well 1 to the overflow of the atmospheric storage tank under a static water level condition.

PROCESS DESCRIPTION

The headloss for the pump in Well 1 is determined by summing the minor losses associated with flow through the piping and lift between the pump in the well to atmospheric storage tank.

ASSUMPTIONS

1. The maximum design pumping rate from the well is 37 gpm.
2. The land surface elevation at Well 1 is approximately 425 ft msl, the well is artesian therefore the static water level is 0 feet below land surface (425 feet msl).
3. The submersible well pump will convey groundwater from the water-supply well to the atmospheric storage tank. The overflow elevation for the atmospheric storage tank is approximately 589 ft msl.
4. Three-inch galvanized steel pipe will be used for the riser pipe, 4-inch HDPE pipe will be used from the well to the treatment building (below-grade), 4-inch ductile iron pipe will be used within the treatment building and 4-inch HDPE pipe will be used from the treatment building to the atmospheric storage tank.
5. The inside diameter of the 3-inch galvanized pipe, the 4-inch HDPE pipe and 4-inch ductile iron pipe and the 4-inch HDPE pipe is 3.068 inches, 3.633 inches, 4.026 inches and 3.633 inches, respectively.
6. The pump setting is 275 ft bg, the length of 3-inch piping between well and the treatment building is approximately 1,925 feet and the length of the 4-inch HDPE pipe between the treatment building and the atmospheric storage tank is approximately 50 feet.
7. Approximately 50 feet of 4-inch ductile iron pipe is used within the treatment building.

Acceleration due to gravity = 32.2 ft/sec^2
Elevation of the overflow for the tank = 589 ft msl
elevation at the well head = 425 ft msl
well pumping water elevation = 425 ft msl
Hazen Williams Roughness Coefficient (Steel), C = 100
Hazen Williams Roughness Coefficient (Plastic), C = 130
3-inch steel pipe length, L1 = 271 ft
4-inch HDPE pipe length, L2 = 1925 ft
4-inch ductile iron pipe length (within building), L3 = 50 ft
4-inch HDPE pipe length, L4 = 50 ft
3-inch steel pipe diameter, d1 = 3.068 in
4-inch HDPE pipe diameter, d2 = 3.633 in
4-inch ductile iron pipe diameter, d3 = 4.026 in
4-inch HDPE pipe diameter, d4 = 3.633 in
Flowrate, Q1 = 37 gpm
1 gpm = 0.00223 ft3/sec

CALCULATION

1. Flow Velocity - Continuity Equation

$$Q = V \times A$$

$$v = \frac{Q \times 0.00223}{[(3.1459/4) \times (d/12)^2]}$$

v(Q1, d1) = 1.605 ft/sec
v(Q1, d2) = 1.145 ft/sec
v(Q1, d3) = 0.932 ft/sec
v(Q1, d4) = 1.145 ft/sec

2. Calculate velocity head and entrance loss

Velocity head, VH = $\frac{v^2}{2 \times g}$

VH(v(Q1, d1)) = 0.0249

Entrance loss, EL = k x (v^2/2 x g) k=1

Entrance Loss = 0.0249

3. Calculate equivalent lengths

3-inch check valve = 25.50 ft
3-inch 90 degree elbow = 7.90 ft
Number of check valves = 1.00 ft
Number of 90 degree elbows = 1.00 ft

EQ1 (3-inch steel riser pipe) = 33.40 ft

4-inch 90 check valve = 11.00 ft
4-inch 90 degree elbow = 8.00 ft
Number of check valves = 2.00 ft
Number of 90 degree elbows = 8.00 ft

EQ2 (4-inch HDPE from well) = 86.00 ft

4-inch check valve = 17.00 ft
4-inch tee = 15.00 ft
4-inch gate valve = 4.00 ft
4-inch 90 degree elbow = 14.00 ft
Flow meter = 10.00 ft
Number of check valves = 2.00
Number of 4-inch tees = 3.00
Number of gate valves = 8.00
Number of 90 degree elbows = 20.00
Number of flow meters = 1.00

EQ3 (4-inch ductile iron) = 356.00

4-inch 90 degree elbow = 14.00 ft
Number of check valves = 2.00 ft 3.068
Number of 90 degree elbows = 8.00 ft

EQ4 (4-inch HDPE to tank) = 92.00 ft

4. Calculate the friction loss using the Hazen-Williams Equation

$$hf = \frac{10.44 \times L \times Q^{1.85}}{C^{1.85} \times d^{4.87}}$$

hf1 (3-inch steel pipe)= 2.15 ft
hf2 (4-inch HDPE pipe) = 3.84 ft
hf3 (4-inch ductile iron steel pipe) = 0.47 ft
hf4 (3-inch HDPE pipe) = 0.77 ft
Summation = 6.46 ft

5. Summation of lift

Lift at Well = Elevation at highest point in system - pumping water level

Lift at Well = 164 ft

Backpressure from 5-micron filter = 16 ft (7 psi)
Backpressure from LT2 filter = 16 ft (7 psi)
Backpressure from UV unit = 5 ft (2 psi)

Total Lift (including backpressure) = 201

6. Calculate total dynamic head

The total dynamic head is determined by summing all the losses associated with the operation of the pump with the total lift

Head =	207.51
Factor of safety (10% TDH) =	20.8
Total dynamic head =	228.26

CONCLUSION

The total dynamic head under a static water level condition that the pump in Well 1 will work against is 228 feet.

SUMMIT CLUB **Date: August 2022**
NORTH CASTLE, NY

CALCULATION OF TOTAL DYNAMIC HEAD - WELL 1

Calculated by: Michael Shortell
Reviewed by: Stephen Rupar

PROBLEM STATEMENT

Calculate the total dynamic head from Well 1 to the overflow of the atmospheric storage tank.

PROCESS DESCRIPTION

The headloss for the pump in Well 1 is determined by summing the minor losses associated with flow through the piping and lift between the pump in the well to atmospheric storage tank.

ASSUMPTIONS

1. The maximum design pumping rate from the well is 37 gpm.
2. The land surface elevation at Well 1 is approximately 425 ft msl, the pumping water level is 248 feet below land surface (177 feet msl).
3. The submersible well pump will convey groundwater from the water-supply well to the atmospheric storage tank. The overflow elevation for the atmospheric storage tank is approximately 589 ft msl.
4. Three-inch galvanized steel pipe will be used for the riser pipe, 4-inch HDPE pipe will be used from the well to the treatment building (below-grade), 4-inch ductile iron pipe will be used within the treatment building and 4-inch HDPE pipe will be used from the treatment building to the atmospheric storage tank.
5. The inside diameter of the 3-inch galvanized pipe, the 4-inch HDPE pipe and 4-inch ductile iron pipe and the 4-inch HDPE pipe is 3.068 inches, 3.633 inches, 4.026 inches and 3.633 inches, respectively.
6. The pump setting is 275 ft bg, the length of 3-inch piping between well and the treatment building is approximately 1,925 feet and the length of the 4-inch HDPE pipe between the treatment building and the atmospheric storage tank is approximately 50 feet.
7. Approximately 50 feet of 4-inch ductile iron pipe is used within the building.

Acceleration due to gravity = 32.2 ft/sec^2
Elevation of the overflow for the tank = 589 ft msl
elevation at the well head = 425 ft msl
well pumping water elevation = 177 ft msl
Hazen Williams Roughness Coefficient (Steel), C = 100
Hazen Williams Roughness Coefficient (Plastic), C = 130
3-inch steel pipe length, L1 = 271 ft
4-inch HDPE pipe length, L2 = 1925 ft
4-inch ductile iron pipe length (within building), L3 = 50 ft
4-inch HDPE pipe length, L4 = 50 ft
3-inch steel pipe diameter, d1 = 3.068 in
4-inch HDPE pipe diameter, d2 = 3.633 in
4-inch ductile iron pipe diameter, d3 = 4.026 in
4-inch HDPE pipe diameter, d4 = 3.633 in
Flowrate, Q1 = 37 gpm
1 gpm = 0.00223 ft3/sec

CALCULATION

1. Flow Velocity - Continuity Equation

$$Q = V \times A$$

$$v = \frac{Q \times 0.00223}{[(3.1459/4) \times (d/12)^2]}$$

v(Q1, d1) = 1.605 ft/sec
v(Q1, d2) = 1.145 ft/sec
v(Q1, d3) = 0.932 ft/sec
v(Q1, d4) = 1.145 ft/sec

2. Calculate velocity head and entrance loss

Velocity head, VH = $\frac{v^2}{2 \times g}$

VH(v(Q1, d1)) = 0.0249

Entrance loss, EL = k x (v^2/2 x g)   k=1

Entrance Loss = 0.0249

3. Calculate equivalent lengths

3-inch check valve = 25.50 ft
3-inch 90 degree elbow = 7.90 ft
Number of check valves = 1.00 ft
Number of 90 degree elbows = 1.00 ft

EQ1 (3-inch steel riser pipe) = 33.40 ft

4-inch 90 check valve = 11.00 ft
4-inch 90 degree elbow = 8.00 ft
Number of check valves = 2.00 ft
Number of 90 degree elbows = 8.00 ft

EQ2 (4-inch HDPE from well) = 86.00 ft

4-inch check valve = 17.00 ft
4-inch tee = 15.00 ft
4-inch gate valve = 4.00 ft
4-inch 90 degree elbow = 14.00 ft
Flow meter = 10.00 ft
Number of check valves = 2.00
Number of 4-inch tees = 3.00
Number of gate valves = 8.00
Number of 90 degree elbows = 20.00
Number of flow meters = 1.00

EQ3 (4-inch ductile iron) = 356.00

4-inch 90 degree elbow = 14.00 ft
Number of check valves = 2.00 ft   3.068
Number of 90 degree elbows = 8.00 ft

EQ4 (4-inch HDPE to tank) = 92.00 ft

4. Calculate the friction loss using the Hazen-Williams Equation

$$hf = \frac{10.44 \times L \times Q^{1.85}}{C^{1.85} \times d^{4.87}}$$

hf1 (3-inch steel pipe)= 2.15 ft
hf2 (4-inch HDPE pipe) = 3.84 ft
hf3 (4-inch ductile pipe) = 0.47 ft
hf4 (3-inch HDPE pipe) = 0.77 ft
Summation = 6.46 ft

5. Summation of lift

Lift at Well = Elevation at highest point in system - pumping water level

Lift at Well =	412	ft	
Backpressure from 5-micron filter =	16	ft	(7 psi)
Backpressure from LT2 filter =	16	ft	(7 psi)
Backpressure from UV unit =	5	ft	(2 psi)
Total Lift (including backpressure) =	449		

6. Calculate total dynamic head

The total dynamic head is determined by summing all the losses associated with the operation of the pump with the total lift

Head =	455.51
Factor of safety (10% TDH) =	45.6
Total dynamic head =	501.06

CONCLUSION

The total dynamic head that the pump in Well 1 will work against is 500 feet.

SUMMIT CLUB **Date: August 2022**
NORTH CASTLE, NY

CALCULATION OF TOTAL DYNAMIC HEAD - WELL 3

Calculated by: Michael Shortell
Reviewed by: Stephen Rupar

PROBLEM STATEMENT

Calculate the total dynamic head from Well 3 to the overflow of the atmospheric storage tank under a static water level condition.

PROCESS DESCRIPTION

The headloss for the pump in Well 3 is determined by summing the minor losses associated with flow through the piping and lift between the pump in the well to atmospheric storage tank.

ASSUMPTIONS

1. The maximum design pumping rate from the well is 33 gpm.
2. The land surface elevation at Well 3 is approximately 437 ft msl, the well is artesian; therefore, the static water level is 0 feet below land surface (437 feet msl).
3. The submersible well pump will convey groundwater from the water-supply well to the atmospheric storage tank. The overflow elevation for the atmospheric storage tank is approximately 589 ft msl.
4. Three-inch galvanized steel pipe will be used for the riser pipe, 4-inch HDPE pipe will be used from the well to the treatment building (below-grade), 4-inch ductile iron pipe will be used within the treatment building and 4-inch HDPE pipe will be used from the treatment building to the atmospheric storage tank.
5. The inside diameter of the 3-inch galvanized pipe, the 4-inch HDPE pipe and 4-inch ductile iron pipe and the 4-inch HDPE pipe is 3.068 inches, 3.633 inches, 4.026 inches and 3.633 inches, respectively.
6. The pump setting is 150 ft bg, the length of 3-inch piping between well and the treatment building is approximately 1,925 feet and the length of the 4-inch HDPE pipe between the treatment building and the atmospheric storage tank is approximately 50 feet.
7. Approximately 50 feet of 4-inch ductile iron pipe is used within the building.

Acceleration due to gravity =	32.2	ft/sec^2
Elevation of the overflow for the tank =	589	ft msl
elevation at the well head =	437	ft msl
well pumping water elevation =	437	ft msl
Hazen Williams Roughness Coefficient (Steel), C =	100	
Hazen Williams Roughness Coefficient (Plastic), C =	130	
3-inch steel pipe length, L1 =	146	ft
4-inch HDPE pipe length, L2 =	1000	ft
4-inch ductile iron pipe length (within building), L3 =	50	ft
4-inch HDPE pipe length, L4 =	50	ft
3-inch steel pipe diameter, d1 =	3.068	in
4-inch HDPE pipe diameter, d2 =	3.633	in
4-inch ductile iron pipe diameter, d3 =	4.026	in
4-inch HDPE pipe diameter, d4 =	3.633	in
Flowrate, Q1 =	33	gpm
1 gpm =	0.00223	ft3/sec

CALCULATION

1. Flow Velocity - Continuity Equation

$$Q = V \times A$$

$$v = \frac{Q \times 0.00223}{[(3.1459/4) \times (d/12)^2]}$$

v(Q1, d1) =	1.431	ft/sec
v(Q1, d2) =	1.021	ft/sec
v(Q1, d3) =	0.831	ft/sec
v(Q1, d4) =	1.021	ft/sec

2. Calculate velocity head and entrance loss

$$\text{Velocity head, VH} = \frac{v^2}{2 \text{ x } g}$$

VH(v(Q1, d1)) = 0.0222

Entrance loss, EL = $k \text{ x } (v^2/2 \text{ x } g)$ $k=1$

Entrance Loss = 0.0222

3. Calculate equivalent lengths

3-inch check valve = 25.50 ft
3-inch 90 degree elbow = 7.90 ft
Number of check valves = 1.00 ft
Number of 90 degree elbows = 1.00 ft

EQ1 (3-inch steel riser pipe) = 33.40 ft

4-inch 90 check valve = 11.00 ft
4-inch 90 degree elbow = 8.00 ft
Number of check valves = 2.00 ft
Number of 90 degree elbows = 8.00 ft

EQ2 (4-inch HDPE from well) = 86.00 ft

4-inch check valve = 17.00 ft
4-inch tee = 15.00 ft
4-inch gate valve = 4.00 ft
4-inch 90 degree elbow = 14.00 ft
Flow meter = 10.00 ft
Number of check valves = 2.00
Number of 4-inch tees = 3.00
Number of gate valves = 8.00
Number of 90 degree elbows = 20.00
Number of flow meters = 1.00

EQ3 (4-inch ductile iron) = 356.00

4-inch 90 degree elbow = 14.00 ft
Number of check valves = 2.00 ft 3.068
Number of 90 degree elbows = 8.00 ft

EQ4 (4-inch HDPE to tank) = 92.00 ft

4. Calculate the friction loss using the Hazen-Williams Equation

$$hf = \frac{10.44 \text{ x } L \text{ x } Q^{1.85}}{C^{1.85} \text{ x } d^{4.87}}$$

hf1 (3-inch steel pipe)= 1.03 ft
hf2 (4-inch HDPE pipe) = 1.68 ft
hf3 (4-inch ductile pipe) = 0.38 ft
hf4 (3-inch HDPE pipe) = 0.63 ft
Summation = 3.08 ft

5. Summation of lift

Lift at Well = Elevation at highest point in system - pumping water level

Lift at Well = 152 ft

Backpressure from 5-micron filter =	16	ft	(7 psi)
Backpressure from LT2 filter =	16	ft	(7 psi)
Backpressure from UV unit =	5	ft	(2 psi)

Total Lift (including backpressure) = 189

6. Calculate total dynamic head

The total dynamic head is determined by summing all the losses associated with the operation of the pump with the total lift

Head =	192.13
Factor of safety (10% TDH) =	19.2

Total dynamic head = 211.34

CONCLUSION

The total dynamic head under a static water level condition Well 3 will work against is 211 feet.

SUMMIT CLUB **Date: August 2022**
NORTH CASTLE, NY

CALCULATION OF TOTAL DYNAMIC HEAD - WELL 3

Calculated by: Michael Shortell
Reviewed by: Stephen Rupar

PROBLEM STATEMENT

Calculate the total dynamic head from Well 3 to the overflow of the atmospheric storage tank.

PROCESS DESCRIPTION

The headloss for the pump in Well 3 is determined by summing the minor losses associated with flow through the piping and lift between the pump in the well to atmospheric storage tank.

ASSUMPTIONS

1. The maximum design pumping rate from the well is 33 gpm.
2. The land surface elevation at Well 3 is approximately 437 ft msl, the pumping water level is 109 feet below land surface (328 feet msl).
3. The submersible well pump will convey groundwater from the water-supply well to the atmospheric storage tank. The overflow elevation for the atmospheric storage tank is approximately 589 ft msl.
4. Three-inch galvanized steel pipe will be used for the riser pipe, 4-inch HDPE pipe will be used from the well to the treatment building (below-grade), 4-inch ductile iron pipe will be used within the treatment building and 4-inch HDPE pipe will be used from the treatment building to the atmospheric storage tank.
5. The inside diameter of the 3-inch galvanized pipe, the 4-inch HDPE pipe and 4-inch ductile iron pipe and the 4-inch HDPE pipe is 3.068 inches, 3.633 inches, 4.026 inches and 3.633 inches, respectively.
6. The pump setting is 150 ft bg, the length of 3-inch piping between well and the treatment building is approximately 1,925 feet and the length of the 4-inch HDPE pipe between the treatment building and the atmospheric storage tank is approximately 50 feet.
7. Approximately 50 feet of 4-inch ductile iron pipe is used within the building.

Acceleration due to gravity =	32.2	ft/sec^2
Elevation of the overflow for the tank =	589	ft msl
elevation at the well head =	437	ft msl
well pumping water elevation =	328	ft msl
Hazen Williams Roughness Coefficient (Steel), C =	100	
Hazen Williams Roughness Coefficient (Plastic), C =	130	
3-inch steel pipe length, L1 =	146	ft
4-inch HDPE pipe length, L2 =	1000	ft
4-inch ductile pipe length (within building), L3 =	50	ft
4-inch HDPE pipe length, L4 =	50	ft
3-inch steel pipe diameter, d1 =	3.068	in
4-inch HDPE pipe diameter, d2 =	3.633	in
4-inch ductile pipe diameter, d3 =	4.026	in
4-inch HDPE pipe diameter, d4 =	3.633	in
Flowrate, Q1 =	33	gpm
1 gpm =	0.00223	ft3/sec

CALCULATION

1. Flow Velocity - Continuity Equation

$$Q = V \times A$$

$$v = \frac{Q \times 0.00223}{[(3.1459/4) \times (d/12)^2]}$$

v(Q1, d1) =	1.431	ft/sec
v(Q1, d2) =	1.021	ft/sec
v(Q1, d3) =	0.831	ft/sec
v(Q1, d4) =	1.021	ft/sec

2. Calculate velocity head and entrance loss

$$\text{Velocity head, VH} = \frac{v^2}{2 \times g}$$

VH(v(Q1, d1)) = 0.0222

Entrance loss, EL = $k \times (v^2/2 \times g)$ k=1

Entrance Loss = 0.0222

3. Calculate equivalent lengths

3-inch check valve = 25.50 ft
3-inch 90 degree elbow = 7.90 ft
Number of check valves = 1.00 ft
Number of 90 degree elbows = 1.00 ft

EQ1 (3-inch steel riser pipe) = 33.40 ft

4-inch 90 check valve = 11.00 ft
4-inch 90 degree elbow = 8.00 ft
Number of check valves = 2.00 ft
Number of 90 degree elbows = 8.00 ft

EQ2 (4-inch HDPE from well) = 86.00 ft

4-inch check valve = 17.00 ft
4-inch tee = 15.00 ft
4-inch gate valve = 4.00 ft
4-inch 90 degree elbow = 14.00 ft
Flow meter = 10.00 ft
Number of check valves = 2.00
Number of 4-inch tees = 3.00
Number of gate valves = 8.00
Number of 90 degree elbows = 20.00
Number of flow meters = 1.00

EQ3 (4-inch ductile) = 356.00

4-inch 90 degree elbow = 14.00 ft
Number of check valves = 2.00 ft 3.068
Number of 90 degree elbows = 8.00 ft

EQ4 (4-inch HDPE to tank) = 92.00 ft

4. Calculate the friction loss using the Hazen-Williams Equation

$$hf = \frac{10.44 \times L \times Q^{1.85}}{C^{1.85} \times d^{4.87}}$$

hf1 (3-inch steel pipe)= 1.03 ft
hf2 (4-inch HDPE pipe) = 1.68 ft
hf3 (4-inch ductile pipe) = 0.38 ft
hf4 (3-inch HDPE pipe) = 0.63 ft
Summation = 3.08 ft

5. Summation of lift

Lift at Well = Elevation at highest point in system - pumping water level

Lift at Well =	261	ft	
Backpressure from 5-micron filter =	16	ft	(7 psi)
Backpressure from LT2 filter =	16	ft	(7 psi)
Backpressure from UV unit =	5	ft	(2 psi)
Total Lift (including backpressure) =	298		

6. Calculate total dynamic head

The total dynamic head is determined by summing all the losses associated with the operation of the pump with the total lift

Head =	301.13
Factor of safety (10% TDH) =	30.1
Total dynamic head =	331.24

CONCLUSION

The total dynamic head that the pump in Well 3 will work against is 331 feet.

SUMMIT CLUB **Date: August 2022**
NORTH CASTLE, NY

CALCULATION OF TOTAL DYNAMIC HEAD - WELL 6A

Calculated by: Michael Shortell
Reviewed by: Stephen Rupar

PROBLEM STATEMENT

Calculate the total dynamic head from Well 6A to the overflow of the atmospheric storage tank under a static water level condition.

PROCESS DESCRIPTION

The headloss for the pump in Well 6A is determined by summing the minor losses associated with flow through the piping and lift between the pump in the well to atmospheric storage tank.

Well 6A
Static level, flowing artesian
Stabilized pumping rate 43 gpm
Pumping Water Level 109.3 ft btoc

ASSUMPTIONS

1. The maximum design pumping rate from the well is 43 gpm.
2. The land surface elevation at Well 1 is approximately 429 ft msl, the well is artesian; therefore, the static water level is 0 feet below land surface (429 feet msl).
3. The submersible well pump will convey groundwater from the water-supply well to the atmospheric storage tank. The overflow elevation for the atmospheric storage tank is approximately 589 ft msl.
4. Three-inch galvanized steel pipe will be used for the riser pipe, 4-inch HDPE pipe will be used from the well to the treatment building (below-grade), 4-inch ductile iron pipe will be used within the treatment building and 4-inch HDPE pipe will be used from the treatment building to the atmospheric storage tank.
5. The inside diameter of the 3-inch galvanized pipe, the 4-inch HDPE pipe and 4-inch ductile iron pipe and the 4-inch HDPE pipe is 3.068 inches, 3.633 inches, 4.026 inches and 3.633 inches, respectively.
6. The pump setting is 150 ft bg, the length of 3-inch piping between well and the treatment building is approximately 1,925 feet and the length of the 4-inch HDPE pipe between the treatment building and the atmospheric storage tank is approximately 50 feet.
7. Approximately 50 feet of 4-inch ductile iron pipe is used within the building.

Acceleration due to gravity =	32.2	ft/sec^2
Elevation of the overflow for the tank =	589	ft msl
elevation at the well head =	429	ft msl
well pumping water elevation =	429	ft msl
Hazen Williams Roughness Coefficient (Steel), C =	100	
Hazen Williams Roughness Coefficient (Plastic), C =	130	
3-inch steel pipe length, L1 =	146	ft
4-inch HDPE pipe length, L2 =	1925	ft
4-inch ductile pipe length (within building), L3 =	50	ft
4-inch HDPE pipe length, L4 =	50	ft
3-inch steel pipe diameter, d1 =	3.068	in
4-inch HDPE pipe diameter, d2 =	3.633	in
4-inch ductile pipe diameter, d3 =	4.026	in
4-inch HDPE pipe diameter, d4 =	3.633	in
Flowrate, Q1 =	43	gpm
1 gpm =	0.00223	ft3/sec

CALCULATION

1. Flow Velocity - Continuity Equation

$$Q = V \times A$$

$$v = \frac{Q \times 0.00223}{[(3.1459/4) \times (d/12)^2]}$$

v(Q1, d1) =	1.865	ft/sec
v(Q1, d2) =	1.330	ft/sec
v(Q1, d3) =	1.083	ft/sec
v(Q1, d4) =	1.330	ft/sec

2. Calculate velocity head and entrance loss

Velocity head, VH = $\dfrac{v^2}{2 \times g}$

VH(v(Q1, d1)) = 0.0290

Entrance loss, EL = k x ($v^2/2 \times g$) k=1

Entrance Loss = 0.0290

3. Calculate equivalent lengths

3-inch check valve = 25.50 ft
3-inch 90 degree elbow = 7.90 ft
Number of check valves = 1.00 ft
Number of 90 degree elbows = 1.00 ft

EQ1 (3-inch steel riser pipe) = 33.40 ft

4-inch 90 check valve = 11.00 ft
4-inch 90 degree elbow = 8.00 ft
Number of check valves = 2.00 ft
Number of 90 degree elbows = 8.00 ft

EQ2 (4-inch HDPE from well) = 86.00 ft

4-inch check valve = 17.00 ft
4-inch tee = 15.00 ft
4-inch gate valve = 4.00 ft
4-inch 90 degree elbow = 14.00 ft
Flow meter = 10.00 ft
Number of check valves = 2.00
Number of 4-inch tees = 3.00
Number of gate valves = 8.00
Number of 90 degree elbows = 20.00
Number of flow meters = 1.00

EQ3 (4-inch ductile iron) = 356.00

4-inch 90 degree elbow = 14.00 ft
Number of check valves = 2.00 ft 3.068
Number of 90 degree elbows = 8.00 ft

EQ4 (4-inch HDPE to tank) = 92.00 ft

4. Calculate the friction loss using the Hazen-Williams Equation

$$hf = \frac{10.44 \times L \times Q^{1.85}}{C^{1.85} \times d^{4.87}}$$

hf1 (3-inch steel pipe)= 1.67 ft
hf2 (4-inch HDPE pipe) = 5.07 ft
hf3 (4-inch ductile pipe) = 0.62 ft
hf4 (3-inch HDPE pipe) = 1.02 ft
Summation = 7.36 ft

5. Summation of lift

Lift at Well = Elevation at highest point in system - pumping water level
Lift at Well = 160 ft

Backpressure from 5-micron filter = 16 ft (7 psi)
Backpressure from LT2 filter = 16 ft (7 psi)
Backpressure from UV unit = 5 ft (2 psi)

Total Lift (including backpressure) = 197

6. Calculate total dynamic head

The total dynamic head is determined by summing all the losses associated with the operation of the pump with the total lift

Head =	204.42
Factor of safety (10% TDH) =	20.4
Total dynamic head =	224.86

CONCLUSION

The total dynamic head under a static water level condition that the pump in Well 1 will work against is 225 feet.

SUMMIT CLUB **Date: August 2022**
NORTH CASTLE, NY

CALCULATION OF TOTAL DYNAMIC HEAD - WELL 6A

Calculated by: Michael Shortell
Reviewed by: Stephen Rupar

PROBLEM STATEMENT

Calculate the total dynamic head from Well 6A to the overflow of the atmospheric storage tank.

PROCESS DESCRIPTION

The headloss for the pump in Well 6A is determined by summing the minor losses associated with flow through the piping and lift between the pump in the well to atmospheric storage tank.

Well 6A
Static level, flowing artesian
Stabilized pumping rate 43 gpm
Pumping Water Level 109.3 ft btoc

ASSUMPTIONS

1. The maximum design pumping rate from the well is 43 gpm.
2. The land surface elevation at Well 1 is approximately 429 ft msl, the pumping water level is 109 feet below land surface (320 feet msl).
3. The submersible well pump will convey groundwater from the water-supply well to the atmospheric storage tank. The overflow elevation for the atmospheric storage tank is approximately 589 ft msl.
4. Three-inch galvanized steel pipe will be used for the riser pipe, 4-inch HDPE pipe will be used from the well to the treatment building (below-grade), 4-inch ductile iron pipe will be used within the treatment building and 4-inch HDPE pipe will be used from the treatment building to the atmospheric storage tank.
5. The inside diameter of the 3-inch galvanized pipe, the 4-inch HDPE pipe and 4-inch ductile iron pipe and the 4-inch HDPE pipe is 3.068 inches, 3.633 inches, 4.026 inches and 3.633 inches, respectively.
6. The pump setting is 150 ft bg, the length of 3-inch piping between well and the treatment building is approximately 1,925 feet and the length of the 4-inch HDPE pipe between the treatment building and the atmospheric storage tank is approximately 50 feet.
7. Approximately 50 feet of 4-inch ductile iron pipe is used within the building.

Acceleration due to gravity = 32.2 ft/sec^2
Elevation of the overflow for the tank = 589 ft msl
elevation at the well head = 429 ft msl
well pumping water elevation = 320 ft msl
Hazen Williams Roughness Coefficient (Steel), C = 100
Hazen Williams Roughness Coefficient (Plastic), C = 130
3-inch steel pipe length, L1 = 146 ft
4-inch HDPE pipe length, L2 = 1925 ft
4-inch ductile pipe length (within building), L3 = 50 ft
4-inch HDPE pipe length, L4 = 50 ft
3-inch steel pipe diameter, d1 = 3.068 in
4-inch HDPE pipe diameter, d2 = 3.633 in
4-inch ductile pipe diameter, d3 = 4.026 in
4-inch HDPE pipe diameter, d4 = 3.633 in
Flowrate, Q1 = 43 gpm
1 gpm = 0.00223 ft3/sec

CALCULATION

1. Flow Velocity - Continuity Equation

$$Q = V \times A$$

$$v = \frac{Q \times 0.00223}{[(3.1459/4) \times (d/12)^2]}$$

v(Q1, d1) = 1.865 ft/sec
v(Q1, d2) = 1.330 ft/sec
v(Q1, d3) = 1.083 ft/sec
v(Q1, d4) = 1.330 ft/sec

2. Calculate velocity head and entrance loss

$$\text{Velocity head, VH} = \frac{v^2}{2 \times g}$$

VH(v(Q1, d1)) = 0.0290

Entrance loss, EL = $k \times (v^2/2 \times g)$ k=1

Entrance Loss = 0.0290

3. Calculate equivalent lengths

3-inch check valve = 25.50 ft
3-inch 90 degree elbow = 7.90 ft
Number of check valves = 1.00 ft
Number of 90 degree elbows = 1.00 ft

EQ1 (3-inch steel riser pipe) = 33.40 ft

4-inch 90 check valve = 11.00 ft
4-inch 90 degree elbow = 8.00 ft
Number of check valves = 2.00 ft
Number of 90 degree elbows = 8.00 ft

EQ2 (4-inch HDPE from well) = 86.00 ft

4-inch check valve = 17.00 ft
4-inch tee = 15.00 ft
4-inch gate valve = 4.00 ft
4-inch 90 degree elbow = 14.00 ft
Flow meter = 10.00 ft
Number of check valves = 2.00
Number of -inch tees = 3.00
Number of gate valves = 8.00
Number of 90 degree elbows = 20.00
Number of flow meters = 1.00

EQ3 (4-inch ductile iron) = 356.00

4-inch 90 degree elbow = 14.00 ft
Number of check valves = 2.00 ft 3.068
Number of 90 degree elbows = 8.00 ft

EQ4 (4-inch HDPE to tank) = 92.00 ft

4. Calculate the friction loss using the Hazen-Williams Equation

$$hf = \frac{10.44 \times L \times Q^{1.85}}{C^{1.85} \times d^{4.87}}$$

hf1 (3-inch steel pipe)= 1.67 ft
hf2 (4-inch HDPE pipe) = 5.07 ft
hf3 (4-inch ductile pipe) = 0.62 ft
hf4 (3-inch HDPE pipe) = 1.02 ft
Summation = 7.36 ft

5. Summation of lift

Lift at Well = Elevation at highest point in system - pumping water level

Lift at Well = 269 ft

Backpressure from 5-micron filter = 16 ft (7 psi)
Backpressure from LT2 filter = 16 ft (7 psi)
Backpressure from UV unit = 5 ft (2 psi)

Total Lift (including backpressure) = 306

6. Calculate total dynamic head

The total dynamic head is determined by summing all the losses associated with the operation of the pump with the total lift

Head = 313.42
Factor of safety (10% TDH) = 31.3

Total dynamic head = 344.76

CONCLUSION

The total dynamic head that the pump in Well 1 will work against is 345 feet.

APPENDIX IX

HARMSCO® MUNICIPAL

Filtration Systems

Meet your EPA LT2 requirements today

Harmsco's Cost-effective Solutions for LT2 Compliance

FACTS

What is Long Term 2 Enhanced Surface Water Treatment Rule (LT2 Rule)?

The EPA has developed the LT2 ESWTR (LT2 Rule) to improve your drinking water quality and provide additional protection from disease-causing microorganisms and contaminants.

Why is the EPA concerned about *Cryptosporidium*?

Cryptosporidium is a significant concern in drinking water because it contaminates most drinking water sources, it is resistant to chlorine and other disinfectants, and has caused waterborne disease outbreaks. Consuming water with ***Cryptosporidium*** can cause gastrointestinal illness which may be severe and sometimes fatal for people with weakened immune systems including infants and the elderly. The EPA estimates that full compliance with LT2 ESWTR will reduce the incidence of cryptosporidiosis by 89,000 to 1,459,000 cases per year, with an associated reduction of 20 to 314 premature deaths.

Who does this rule apply to?

The LT2 ESWTR applies to all public water systems that use surface water, or ground water under the direct influence of surface water. This includes about 14,000 systems serving approximately 180 million people.

LT2 ESWTR Toolbox Manual (April, 2010)

COMPLIANCE

- All components used in drinking water treatment process should be evaluated for contaminant leaching and Certified under **ANSI/NSF Standard 61**.

- The **filter housing and cartridge** must be challenge tested per **LT2 ESWTR Toolbox Guidance Manual** with specific instructions regarding:
  - Full scale filter testing, challenge particulate, test solution concentration, challenge test duration, water quality of test solution, maximum design flow rate, challenge particulate seeding method and concentration, sampling procedures and calculation of log removal.

- Testing is product specific, not site specific, meaning it does not have to be tested at every water system seeking removal credit. Instead, a manufacturer or independent third party would challenge test each of its products in order to obtain a 2.0- or 2.5-log Cryptosporidium removal rating:
  - Up to 2.0-log removal for individual cartridge filters showing a minimum of 3.0-log removal in challenge testing.
  - Up to 2.5-log removal for cartridge filters in series showing a minimum of 3.0-log removal in challenge testing.

- A minimum of two (2) bag or cartridge filter housings should be provided to ensure continuous water treatment in the event of failure in the filter operation and to allow for filter maintenance and replacement.

For more information, please visit: http://water.epa.gov/lawsregs/rulesregs/sdwa/lt2/basicinformation.cfm

Harmsco® LT2 Cartridges for Cyst-free Drinking Water

Harmsco® LT2 cartridges and housings exceed the three-log (99.9%) removal requirement described in LT2 ESWTR Toolbox Guidance Manual 8.4.1. for cyst-sized particles. For this reason, Harmsco® LT2 filter cartridge elements are ideal to control cryptosporidium, giardia cysts and other harmful microorganisms to help ensure safe drinking water.

Independent Lab Validated

To verify the performance of the Harmsco® LT2 cartridge and NSF filter housing, Pace/IBR, highly respected independent testing facilities, were selected to conduct challenge tests as outlined in the LT2 ESWTR Toolbox Guidance Manual 8.4.1. This defines the maximum challenge particulate based on detection limit and acceptable cryptosporidium surrogate…2 microns in these tests. The “terminal” pressure drop was determined by Harmsco® to be 30 psi. The Harmsco® LT2 cartridges were tested via single pass protocol per the EPA at 3 separate points: 1.) after initial flushing (clean cartridge), 2.) at 50% of terminal pressure drop (15 psid) and 3.) after terminal pressure loss has been reached (30 psid).

Results of Challenge Test Conducted by IBR

Cartridge Tested	Filter Housing	Tested Flow Rate	Sample Point	Minimum Log Removal
HC/170-LT2	MUNI-1-2FL-304	100 GPM	Initial Efficiency	3.6
			50% Terminal Pressure Drop: 15 psi	3.8
			100% Terminal Pressure Drop: 30 psi	3.7

Features & Benefits

- NSF-61 Listed cartridge filter system removes cyst-sized particles providing safe drinking water
- Pleated microfiber media provides exceptional surface area for longer filter life and increased particle removal
- Patented Dual Durometer end caps ensure positive end cap sealing
- End caps, center tubes and media are thermally bonded as one integral component for added strength while providing superior sealing
- 120 sq. ft. media (surface area) in a single cartridge design
- FDA Listed Materials: Manufactured from materials which are listed for food contact applications in Title 21 of the U.S. Code of Federal Regulations

LT2 Cartridge
Length and O.D.

Low Pressure Drop

Initial pressure drop using HC/170-LT2 cartridges is exceptionally low due to our pleated design and increased surface area. Pressure drop data is shown below, calculated for new cartridges in clear water.

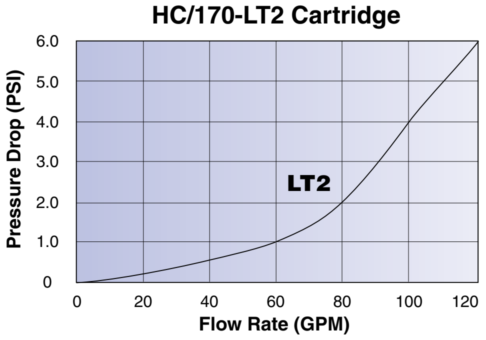
HC/170-LT2 Cartridge

Specifications

- **Filter Media:** FDA borosilicate microglass with acrylic binder
- **Support Media:** spun-bonded polyester laminated on both upstream and downstream sides
- **Center Tubes:** rigid PVC with perforations
- **End Caps:** plastisol (pliable PVC)
- **Heat-seal Bags:** standard on HC/170-LT2 cartridge
- **Flow Rate:** 100 GPM (recommended) per HC/170-LT2 cartridge; > 3.6 Log removal
- **Temperature:** 140˚F (60˚C) max*

* Temperature limits vary and depend on pressure and time under load.

- **Maximum Change Out:** 30 PSI (2.07 Bar) ΔP
- **Surface Area:** 120 sq. ft. (HC/170-LT2)
- **Dimensions:** 7-3/4” O.D.; 4” I.D.; 30-3/4” L.
- **pH:** 3 to 11

HARMSCO® MUNICIPAL Filtration Systems

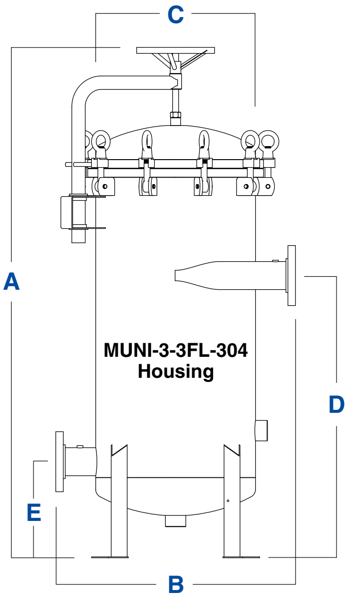

Certified to
ANSI-NSF 61

Certified: NSF/ANSI Standard 61

**Drinking Water System Components -
Health Effects**


MUNI-1-2FL-304


MUNI-3-3FL-304


MUNI-5-4FL-304


MUNI-8-6FL-304

Filter Model	A Filter Height	B Width	C Diameter	D Inlet	E Outlet	Pipe Size I/O NPS	Drain Size NPT	Floor Space	Service Height	Shipping Wt. (lbs.)
MUNI-1-2FL-304	48”	15-1/2”	11”	23-5/8”	9-3/4”	2” Flange	3/4”	1.6 ft^2	77”	150
MUNI-3-3FL-304	64”	30”	20”	35-1/4”	12”	3” Flange	1-1/2”	4.5 ft^2	98-1/2”	420
MUNI-5-4FL-304	74”	37-1/2”	30”	38”	14-1/8”	4” Flange	1-1/2”	8.5 ft^2	98-1/2”	1,100
MUNI-8-6FL-304	84”	45-1/4”	35-3/8”	44-1/4”	20-1/2”	6” Flange	1-1/2”	14 ft^2	104-1/2”	1,600

Design Recommendations

Pre-filtration is always recommended due to potential changes in environmental conditions. Turbidity must not exceed 1-NTU prior to final filtration stage (HC/170-LT2 cartridge). For more information please contact Harmsco Filtration Products.

Pre-Filtration

Filter Model	NO. of Cartridges	Pleated Media Area (sq.ft.)	Max Flow Rate (GPM)	Max Flow Rate (LPM)	Max Flow Rate (M^3/HR)
MUNI-1-2FL-304	1	170	150	568	34
MUNI-3-3FL-304	3	510	450	1,703	102
MUNI-5-4FL-304	5	850	750	2,839	170
MUNI-8-6FL-304	8	1,360	1,200	4,542	272

Final Stage

Filter Model	NO. of Cartridges	Pleated Media Area (sq.ft.)	Max Flow Rate (GPM)	Max Flow Rate (LPM)	Max Flow Rate (M^3/HR)
MUNI-1-2FL-304	1	120	100	378	23
MUNI-3-3FL-304	3	360	300	1,135	68
MUNI-5-4FL-304	5	600	500	1,892	113
MUNI-8-6FL-304	8	960	800	3,028	181

Filter Specifications

- 304L or 316L stainless steel, electropolished
- Built to ASME design standards (not code stamped)
- Standpipe - 304L or 316L stainless steel
- Inlet/Outlet - flanged connections
- NSF 61 Listed Ball Valves (2) - 316 stainless steel
- O-ring housing seal, swing bolt closure
- NSF 61 Listed Pressure Gauges (2) - 316 stainless steel
- Pressure - 150 psi (10 bar) max.
- Temperature* - up to 140˚F (60˚C) with standard cartridges

* Temperature ratings based on pressure and time under load.

Note: This publication is to be used as a guide. The data within has been obtained from many sources and is considered to be accurate. Harmsco does not assume liability for the accuracy and/or completeness of this data. Changes to the data can be made without notification. Temperature, Pressure, Flow Rates, Differential Pressures, Chemical Combinations and other unknown factors can affect performance in unknown ways. **Limited Warranty:** Harmsco warrants their products to be free of material and workmanship defects. Determination of suitability of Harmsco products for uses and applications contemplated by Buyer shall be the sole responsibility of Buyer. The end user/installer/buyer shall be liable for the product's performance and suitability regarding their specific intended applications. End users should perform their own tests to determine suitability for each application.

HARMSCO® MUNICIPAL Filtration Systems
www.harmsco.com
P.O. Box 14066, North Palm Beach, FL 33408
(561) 848-9628 • Toll-free: (800) 327-3248 • Fax: (561) 845-2474 • E-mail: sales@harmsco.com
Made in USA

80A MUNI 19 8/12

APPENDIX X

ETS-UV
an evoqua brand

BUDGET PROPOSAL
ETS - UV SYSTEM

Project Name:	Summit Club
Project Location:	Armonk, NY
Proposal No.:	22 UV 026 MS0
Proposal Date:	2-Dec-2021
Proposal Expires:	2-Mar-2022
Applications Engineer:	Martin Smith
Sales Manager:	Joe Ciurlino
Manufacturers Rep:	Carlsen Systems
Contact:	Tim Bezler
Phone:	(203) 731-4318
email:	tbezler@carlsensystems.com
Consultant:	WSP
Contact:	Michael Shortell
Phone:	203 929 8555

SCOPE OF SUPPLY

Qty	Description
	DESIGN CONSIDERATIONS
	Flowrate: 210 gpm
	Transmittance (1 cm light cell): 85%
	Dose: 40 mJ/cm2
	Configuration: 2 x WF-225-8 (100% redundancy)
	WF-225-8
	UV Chamber
2	ETS-UV WF-225-8 UV systems complete with:
	8" ANSI flange connections, 316L SS
	(2) 2.5 kW Medium pressure UV lamps pependicular to flow
	(2) Quartz sleeve
	Temperature sensor
	Automatic/Mechanical cleaning
	(1) UV intensity sensor
	(1) Operation and maintenance manual
	Power/Control Cabinet
2	Wall mounted power/control cabinets, epoxy coated painted steel, complete with:
	Spectra 3, 7" touch screen
	Electronic ballast
	Dimensions: H 32 x W 24 x D 12-in
	Power supply: 380 - 480V, 3ø, 3-wire + GND, 50/60Hz
	NEMA-12 enclosure
	Cable - UV chamber to power/control cabinet
4	50 ft molded lamp cables
2	50 ft cable kits (sensors / motor)
	Spares
2	UV lamps
1	Electronic ballast
2	Quartz sleeves
2	O Ring seals
2	Wiper rings for quartz sleeve
1	Wiper flap for UV intensity monitor

SCOPE OF ENGINEERING

The following documentation shall be provided by Evoqua:

- Shop Drawing Submittal
  - Detailed Scope of Supply
  - Comments & Clarifications
  - Project Schedule
  - Technical Information / Equipment / Drawings
    Catalog Cutsheets
    Dimensional Drawings / General Assembly Drawings
    Functional Schematics / Piping and Instrumentation Diagrams (when applicable)
    Electrical Schematics (when applicable)
    Control Panel Layouts, Ladder Logic Diagrams (when applicable)
  - Receiving, Handling and Storage
  - Warranty Statement
- Operation and Maintenance Manuals
  - Ordering Information
  - Warranty Statement
  - Introduction
  - Safety Precautions
  - Preventive Maintenance General Information
  - Maintenance Record Card
  - Regional Offices
  - Technical Data
  - Installation
  - Operation
  - Service
  - Illustrations
  - Preventive Maintenance Kits and Spare Parts List
  - Additional Literature

NOTE - In an effort to be environmentally responsible, one (1) hard copy of the submittal and O+M will be supplied and up to eight (8) copies will be supplied on flash drive(s). Additional hardcopies of the submittal and O+M can be supplied at a cost of $50.00 each.

CLARIFICATIONS & EXCEPTIONS

Section	Part	Description
NOTICE		The scope of supply and pricing are based on Evoqua's standard equipment selection, standard terms of sale and warranty terms. Any variations from these standards may affect this quotation.

Variations from Evoqua's standard Terms and Conditions of Sale and the Clarifications/Exceptions identified above can be negotiated on an individual, as needed basis prior to award of contract. However, please note that this proposal is expressly conditioned upon: (i) acceptance by the Owner or Contractor of the Terms and Conditions of Sale and the Clarifications/Exceptions as described within this proposal, without modification or addition, or a mutually agreed upon set of commercial and technical terms; and (ii) Evoqua's satisfactory completion of an anti-corruption due diligence review of the purchaser.

ITEMS NOT INCLUDED IN SCOPE

- Mechanical and electrical installation labor
- Civil work including supply of anchor bolts
- Interconnecting piping
- Interconnecting wiring (unless detailed above)
- Valves, fittings, appurtenances not specifically listed above
- Installation supervision
- All taxes, fees, lien waivers, certificates, bonds and licenses
- Room ventilation, air conditioning, or lighting
- Videotaping (unless a videotape agreement is signed)

COMMERCIAL OFFERING

Payment Terms: 30% Due on Approval of Submittals
60% Due on Shipment of Equipment
10% Due on Startup (not to exceed 90 days after Equipment Shipment
All payments are due 30 days from date of invoice and are not subject to retention.
FOB: Factory
Freight to Job Site: Included
Submittal: 4-6 weeks after receipt and approval of purchase order
Shipment: 12-14 weeks after receipt of full information and approved drawings (when required)
Startup: 3 On-site day(s) included over 2 Trip(s)
Training: Concurrent with startup
Extended Warranty: Not Included
Price: **$82,584**

Other Conditions:

1) Evoqua Water Technolgies, LLC (Evoqua) proposes to furnish materials, and/or equipment for the project identified at the beginning of this proposal. Any items not shown above as detailed under (i) 'SCOPE OF SUPPLY', (ii) 'SCOPE OF ENGINEERING', or (iii) other attachments to this proposal, are EXCLUDED. In addition:
   a. Evoqua' price will be held valid for a period of 90 days from the date of this proposal ("Proposal Date"); provided, however, in the event (A) Evoqua receives an order from Buyer within 90 days from the Proposal Date and the percentage change in the U.S. Department of Labor Consumer's Price Index (all items) (the "Index") as it existed two months prior to the Proposal Date and the Index as it existed two months preceding the month in which Evoqua receives Buyer's order is greater than 10%, then Evoqua shall have the right to reprice this proposal or (B) Buyer's order is received more than 90 days
   specifications) (the "Information") is confidential and/or proprietary and has been prepared for your use solely in evaluating the purchase of the equipment and/or services described herein. Transmission of all or any part of the Information to others, or use by you for any purpose other than such evaluation, is expressly prohibited without Evoqua' prior written consent.

4) Please address & send your purchase order to:

Neptune Benson Inc.
Warwick, RI 02886-1286
Attn: Martin Smith
ph: 401.262.4731
fax: 401.821.7129
email: martin.smith@evoqua.com

Standard Terms & Conditions of Sale

1-May-15

1. Applicable Terms. These terms govern the purchase and sale of equipment, products, related services, leased products, and media goods if any (collectively herein "Work"), referred to in Seller's proposal ("Seller's Documentation"). Whether these terms are included in an offer or an acceptance by Seller, such offer or acceptance is expressly conditioned on Buyer's assent to these terms. Seller rejects all additional or different terms in any of Buyer's forms or documents.

2. Payment. Buyer shall pay Seller the full purchase price as set forth in Seller's Documentation. Unless Seller's Documentation specifically provides otherwise, freight, storage, insurance and all taxes, levies, duties, tariffs, permits or license fees or other governmental charges relating to the Work or any incremental increases thereto shall be paid by Buyer. If Seller is required to pay any such charges, Buyer shall immediately reimburse Seller. If Buyer claims a tax or other exemption or direct payment permit, it shall provide Seller with a valid exemption certificate or permit and indemnify, defend and hold Seller harmless from any taxes, costs and penalties arising out of same. All payments are due within 30 days after receipt of invoice. Buyer shall be charged the lower of 1 ½% interest per month or the maximum legal rate on all amounts not received by the due date and shall pay all of Seller's reasonable costs (including attorneys' fees) of collecting amounts due but unpaid. All orders are subject to credit approval by Seller. Back charges without Seller's prior written approval shall not be accepted.

3. Delivery. Delivery of the Work shall be in material compliance with the schedule in Seller's Documentation. Unless Seller's Documentation provides otherwise, delivery terms are ExWorks Seller's factory (Incoterms 2010). Title to all Work shall pass upon receipt of payment for the Work under the respective invoice. Unless otherwise agreed to in writing by Seller, shipping dates are approximate only and Seller shall not be liable for any loss or expense (consequential or otherwise) incurred by Buyer or Buyer's customer if Seller fails to meet the specified delivery schedule.

4. Ownership of Materials and Licenses. All devices, designs (including drawings, plans and specifications), estimates, prices, notes, electronic data, software and other documents or information prepared or disclosed by Seller, and all related intellectual property rights, shall remain Seller's property. Seller grants Buyer a non-exclusive, non-transferable license to use any such material solely for Buyer's use of the Work. Buyer shall not disclose any such material to third parties without Seller's prior written consent. Buyer grants Seller a non-exclusive, non-transferable license to use Buyer's name and logo for marketing purposes, including but not limited to, press releases, marketing and promotional materials, and web site content.

5. Changes. Neither party shall implement any changes in the scope of Work described in Seller's Documentation without a mutually agreed upon change order. Any change to the scope of the Work, delivery schedule for the Work, any Force Majeure Event, any law, rule, regulation, order, code, standard or requirement which requires any change hereunder shall entitle Seller to an equitable adjustment in the price and time of performance.

6. Force Majeure Event. Neither Buyer nor Seller shall have any liability for any breach or delay (except for breach of payment obligations) caused by a Force Majeure Event. If a Force Majeure Event exceeds six (6) months in duration, the Seller shall have the right to terminate the Agreement without liability, upon fifteen (15) days written notice to Buyer, and shall be entitled to payment for work performed prior to the date of termination. "Force Majeure Event" shall mean events or circumstances that are beyond the affected party's control and could not reasonably have been easily avoided or overcome by the affected party and are not substantially attributable to the other party. Force Majeure Event may include, but is not limited to, the following circumstances or events: war, act of foreign enemies, terrorism, riot, strike, or lockout by persons other than by Seller or its sub-suppliers, natural catastrophes or (with respect to on-site work), unusual weather conditions.

7. Warranty. Subject to the following sentence, Seller warrants to Buyer that the (i) Work shall materially conform to the description in Seller's Documentation and shall be free from defects in material and workmanship and (ii) the Services shall be performed in a timely and workmanlike manner. Determination of suitability of treated water for any use by Buyer shall be the sole and exclusive responsibility of Buyer. The foregoing warranty shall not apply to any Work that is specified or otherwise demanded by Buyer and is not manufactured or selected by Seller, as to which (i) Seller hereby assigns to Buyer, to the extent assignable, any warranties made to Seller and (ii) Seller shall have no other liability to Buyer under warranty, tort or any other legal theory. The Seller warrants the Work, or any components thereof, through the earlier of (i) eighteen (18) months from delivery of the Work or (ii) twelve (12) months from initial operation of the Work or ninety (90) days from the performance of services (the "Warranty Period"). If Buyer gives Seller prompt written notice of breach of this warranty within the Warranty Period, Seller shall, at its sole option and as Buyer's sole and exclusive remedy, repair or replace the subject parts, re-perform the Service or refund the purchase price. Unless otherwise agreed to in writing by Seller, (i) Buyer shall be responsible for any labor required to gain access to the Work so that Seller can assess the available remedies and (ii) Buyer shall be responsible for all costs of installation of repaired or replaced Work. If Seller determines that any claimed breach is not, in fact, covered by this warranty, Buyer shall pay Seller its then customary charges for any repair or replacement made by Seller. Seller's warranty is conditioned on Buyer's (a) operating and maintaining the Work in accordance with Seller's instructions, (b) not making any unauthorized repairs or alterations, and (c) not being in default of any payment obligation to Seller. Seller's warranty does not cover (i) damage caused by chemical action or abrasive material, misuse or improper installation (unless installed by Seller) and (ii) media goods (such as, but not limited to, resin, membranes, or granular activated carbon media) once media goods are installed. THE WARRANTIES SET FORTH IN THIS SECTION 7 ARE THE SELLER'S SOLE AND EXCLUSIVE WARRANTIES AND ARE SUBJECT TO THE LIMITATION OF LIABILITY PROVISION BELOW. SELLER MAKES NO OTHER WARRANTIES OF ANY KIND, EXPRESS OR IMPLIED, INCLUDING WITHOUT LIMITATION, ANY WARRANTY OF MERCHANTABILITY OR FITNESS FOR PURPOSE.

8. Indemnity. Seller shall indemnify, defend and hold Buyer harmless from any claim, cause of action or liability incurred by Buyer as a result of third party claims for personal injury, death or damage to tangible property, to the extent caused by Seller's negligence. Seller shall have the sole authority to direct the defense of and settle any indemnified claim. Seller's indemnification is conditioned on Buyer (a) promptly, within the Warranty Period, notifying Seller of any claim, and (b) providing reasonable cooperation in the defense of any claim.

9. Assignment. Neither party may assign this Agreement, in whole or in part, nor any rights or obligations hereunder without the prior written consent of the other party; provided, however, the Seller may assign its rights and obligations under these terms to its affiliates or in connection with the sale or transfer of the Seller's business and Seller may grant a security interest in the Agreement and/or assign proceeds of the agreement without Buyer's consent.

10. Termination. Either party may terminate this agreement, upon issuance of a written notice of breach and a thirty (30) day cure period, for a material breach (including but not limited to, filing of bankruptcy, or failure to fulfill the material obligations of this agreement). If Buyer suspends an order without a change order for ninety (90) or more days, Seller may thereafter terminate this Agreement without liability, upon fifteen (15) days written notice to Buyer, and shall be entitled to payment for work performed, whether delivered or undelivered, prior to the date of termination.

11. Dispute Resolution. Seller and Buyer shall negotiate in good faith to resolve any dispute relating hereto. If, despite good faith efforts, the parties are unable to resolve a dispute or claim arising out of or relating to this Agreement or its breach, termination, enforcement, interpretation or validity, the parties will first seek to agree on a forum for mediation to be held in a mutually agreeable site. If the parties are unable to resolve the dispute through mediation, then any dispute, claim or controversy arising out of or relating to this Agreement or the breach, termination, enforcement, interpretation or validity thereof, including the determination of the scope or applicability of this agreement to arbitrate, shall be determined by arbitration in Pittsburgh, Pennsylvania before three arbitrators who are lawyers experienced in the discipline that is the subject of the dispute and shall be jointly selected by Seller and Buyer. The arbitration shall be administered by JAMS pursuant to its Comprehensive Arbitration Rules and Procedures. The Arbitrators shall issue a reasoned decision of a majority of the arbitrators, which shall be the decision of the panel. Judgment may be entered upon the arbitrators' decision in any court of competent jurisdiction. The substantially prevailing party as determined by the arbitrators shall be reimbursed by the other party for all costs, expenses and charges, including without limitation reasonable attorneys' fees, incurred by the prevailing party in connection with the arbitration. For any order shipped outside of the United States, any dispute shall be referred to and finally determined by the International Center for Dispute Resolution in accordance with the provisions of its International Arbitration Rules, enforceable under the New York Convention (Convention on the Recognition and Enforcement of Foreign Arbitral Awards) and the governing language shall be English.

12. Export Compliance. Buyer acknowledges that Seller is required to comply with applicable export laws and regulations relating to the sale, exportation, transfer, assignment, disposal and usage of the Work provided under this Agreement, including any export license requirements. Buyer agrees that such Work shall not at any time directly or indirectly be used, exported, sold, transferred, assigned or otherwise disposed of in a manner which will result in non-compliance with such applicable export laws and regulations. It shall be a condition of the continuing performance by Seller of its obligations hereunder that compliance with such export laws and regulations be maintained at all times. BUYER AGREES TO INDEMNIFY AND HOLD SELLER HARMLESS FROM ANY AND ALL COSTS, LIABILITIES, PENALTIES, SANCTIONS AND FINES RELATED TO NON-COMPLIANCE WITH APPLICABLE EXPORT LAWS AND REGULATIONS.

13. LIMITATION OF LIABILITY. NOTWITHSTANDING ANYTHING ELSE TO THE CONTRARY, SELLER SHALL NOT BE LIABLE FOR ANY CONSEQUENTIAL, INCIDENTAL, SPECIAL, PUNITIVE OR OTHER INDIRECT DAMAGES, AND SELLER'S TOTAL LIABILITY ARISING AT ANY TIME FROM THE SALE OR USE OF THE WORK, INCLUDING WITHOUT LIMITATION ANY LIABILITY FOR MECHANICAL WARRANTY CLAIMS OR FOR ANY BREACH OR FAILURE TO PERFORM ANY OBLIGATION UNDER THE CONTRACT, SHALL NOT EXCEED THE PURCHASE PRICE PAID FOR THE WORK. THESE LIMITATIONS APPLY WHETHER THE LIABILITY IS BASED ON CONTRACT, TORT, STRICT LIABILITY OR ANY OTHER THEORY.

14. Rental Equipment / Services. Any leased or rented equipment ("Leased Equipment") provided by Seller shall at all times be the property of Seller with the exception of certain miscellaneous installation materials purchased by the Buyer, and no right or property interest is transferred to the Buyer, except the right to use any such Leased Equipment as provided herein. Buyer agrees that it shall not pledge, lend, or create a security interest in, part with possession of, or relocate the Leased Equipment. Buyer shall be responsible to maintain the Leased Equipment in good and efficient working order. At the end of the initial term specified in the order, the terms shall automatically renew for the identical period unless canceled in writing by Buyer or Seller not sooner than three (3) months nor later than one (1) month from termination of the initial order or any renewal terms. Upon any renewal, Seller shall have the right to issue notice of increased pricing which shall be effective for any renewed terms unless Buyer objects in writing within fifteen (15) days of issuance of said notice. If Buyer timely cancels service in writing prior to the end of the initial or any renewal term this shall not relieve Buyer of its obligations under the order for the monthly rental service charge which shall continue to be due and owing. Upon the expiration or termination of this Agreement, Buyer shall promptly make any Leased Equipment available to Seller for removal. Buyer hereby agrees that it shall grant Seller access to the Leased Equipment location and shall permit Seller to take possession of and remove the Leased Equipment without resort to legal process and hereby releases Seller from any claim or right of action for trespass or damages caused by reason of such entry and removal.

15. Miscellaneous. These terms, together with any Contract Documents issued or signed by the Seller, comprise the complete and exclusive statement of the agreement between the parties (the "Agreement") and supersede any terms contained in Buyer's documents, unless separately signed by Seller. No part of the Agreement may be changed or cancelled except by a written document signed by Seller and Buyer. No course of dealing or performance, usage of trade or failure to enforce any term shall be used to modify the Agreement. To the extent the Agreement is considered a subcontract under Buyer's prime contract with an agency of the United States government, in case of Federal Acquisition Regulations (FARs) flow down terms, Seller will be in compliance with Section 44.403 of the FAR relating to commercial items and those additional clauses as specifically listed in 52.244-6, Subcontracts for Commercial Items (OCT 2014). If any of these terms is unenforceable, such term shall be limited only to the extent necessary to make it enforceable, and all other terms shall remain in full force and effect. The Agreement shall be governed by the laws of the Commonwealth of Pennsylvania without regard to its conflict of laws provisions. Both Buyer and Seller reject the applicability of the United Nations Convention on Contracts for the international sales of goods to the relationship between the parties and to all transactions arising from said relationship.

Technical Data Sheet
Wafer UV Disinfection system
DS-WF-EN-US-DS-0921

NAM

Certification/Approvals: USEPA UVDGM, NSF61, CE Marked, MET UL Certified, NSF 50 - 3 Log Crypto, NVI

Common Option Features

Features	Standard Chamber Specification	Options
Lamp Life	9,000 Hours	
Lamp design	TWISTLOK™ Quick Release, Enhanced Safety - Medium Pressure	
Lamp and Wiper Access	Single Ended Access	
Design Pressure	150 psi Design (225 psi test)	
Number of Sensors	1-off (2-off for model WF-430-12)	
Variable Power	100% to 30% Power (automatic dose pacing)	
Connection Type	ANSI 150	
Generator Material	316L Stainless Steel	Superduplex (25Cr) Stainless Steel
Internal / External Finish	Electropolished	
Internal Surface Finish	125 Ra	
Quartz Type	High Purity Quartz	TiO2 Doped quartz
Mounting	Fixed Brackets	
Cleaning system	Automatic Wiper System	
Temperature Probe	AT-487 (PT-100)	
Vent Port	1/2" NPT (air release valve supplied for horizontal installations)	
Drain Port	1/4" NPT	
Sacrificial Anode - COMPONENT EXTRA	Included (aquatics applications only)	
Installation	Horizontal or Vertical (lamps must be horizontal)	

Common Option Features (continued)

Features	Standard Cabinet Specification	Options
Material	Epoxy Coated Mild steel - RAL 7035	Stainless Steel (304)
Control Type	Spectra 3 Microprocessor	
Power supply	Electronic Ballast	
Protection	NEMA12	NEMA4X
Ventilation	Forced Air (fan)	
Interface	Spectra Touch	Spectra Membrane
Communication	Modbus (RS-422 / RS-485)	Profibus DP, Modbus TCP, Ethernet IP
Protection	Door Locked MCCB Isolator	
Operating Temperature	Max Working Ambient 113°F	
Digital Inputs	3-off selectable	Additional 3-off selectable
Digital Outputs	3-off selectable	Additional 3-off selectable
Analogue Inputs	1-off selectable	Additional 1-off selectable
Analogue Outputs	1-off selectable	Additional 1-off selectable

Unique Features

UV System	WF-115-3-N	WF-115-4-N	WF-125-6-N	WF-215-6-N	WF-215-8-N	WF-225-8-N	WF-230-10-N	WF-430-12-N
Number of Lamps	1	1	1	2	2	2	2	4
Connection Size (inch/mm)	ANSI/DN 3/80	ANSI/DN 4/100	ANSI/DN 6/150	ANSI/DN 6/150	ANSI/8/2 6/150	ANSI/DN 8/200	ANSI/DN 10/250	ANSI/DN 12/300
Power Consumption (variable)	0.7 - 1.6 kW	0.7 - 1.6 kW	1.1 - 2.7 kW	1.3 - 3.3 kW	1.3 - 3.3 kW	2.0 - 5.5 kW	2.6 - 6.6 kW	4.0 - 13.0 kW
200v - 50/60hz	Standard	Standard	Standard	Standard	Standard	N/A	N/A	N/A
208 - 240v 50/60hz	Standard	Standard	Standard	Standard	Standard	Standard	N/A	N/A
380v - 480v 50/60hz	N/A	N/A	N/A	N/A	N/A	Option	Standard	Standard
Cable length								
30 feet	Standard	Standard	Standard	Standard	Standard	Standard	Standard	Standard
45 feet	Option	Option	Option	Option	Option	Option	Option	Option
90 feet	Option	Option	Option	Requires local JB	Requires local JB	Option	Option	Option

Dimensions

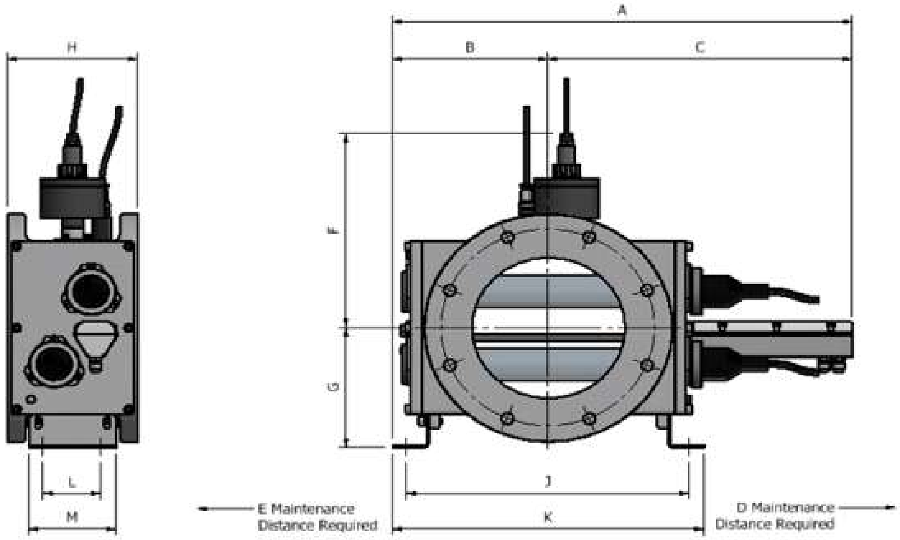

UV System	WF-115-3-N	WF115-4-N	WF-125-6-N	WF-215-6-N	WF-215-8-N	WF-225-8-N	WF-230-10-N	WF-430-12-N
Chamber Dimensions								
A (mm / inches)	520 / 20.3	520 / 20.3	635 / 24.8	635 / 24.8	635 / 24.8	635 / 24.8	795 / 31.0	795 / 31.0
B (mm / inches)	158 / 6.2	158 / 6.2	215 / 8.4	215 / 8.4	215 / 8.4	215 / 8.4	305 / 11.9	305 / 11.9
C (mm / inches)	362 / 14.1	362 / 14.1	420 / 16.4	420 / 16.4	420 / 16.4	420 / 16.4	490 / 19.1	490 / 19.1
D (mm / inches)	370 / 14.4	370 / 14.4	485 / 18.9	485 / 18.9	485 / 18.9	485 / 18.9	625 / 24.4	625 / 24.4
E (mm / inches)	250 / 9.8	250 / 9.8	250 / 9.8	250 / 9.8	250 / 9.8	250 / 9.8	250 / 9.8	250 / 9.8
F (mm / inches)	167 / 6.5	167 / 6.5	226 / 8.8	226 / 8.8	226 / 8.8	226 / 8.8	242 / 9.4	267 / 10.4
G (mm / inches)	122 / 4.8	122 / 4.8	180 / 7.0	180 / 7.0	180 / 7.0	180 / 7.0	233 / 9.1	258 / 10.1
H (mm / inches)	160 / 6.2	160 / 6.2	180 / 7.0	180 / 7.0	180 / 7.0	180 / 7.0	190 / 7.4	190 / 7.4
J (mm / inches)	275 / 10.7	275 / 10.7	390 / 15.2	390 / 15.2	390 / 15.2	390 / 15.2	560 / 21.8	560 / 21.8
K (mm / inches)	315 / 12.3	315 / 12.3	430 / 16.8	430 / 16.8	430 / 16.8	430 / 16.8	610 / 23.8	610 / 23.8
L (mm / inches)	80 / 3.1	80 / 3.1	80 / 3.1	80 / 3.1	80 / 3.1	80 / 3.1	140 / 5.5	140 / 5.5
M (mm / inches)	120 / 4.7	120 / 4.7	120 / 4.7	120 / 4.7	120 / 4.7	120 / 4.7	180 / 7.0	180 / 7.0
Dry Weight (kg / lbs)	27 / 60	26 / 57	57 / 126	58 / 128	53 / 117	53 / 117	78 / 172	88 / 194
Wet Weight (kg / lbs)	30 / 66	28 / 62	67 / 148	68 / 150	64 / 141	64 / 141	99 / 218	112 / 247
Cabinet Dimensions (NEMA12)								
Width (mm / inches)	500 / 20	500 / 20	600 / 24	600 / 24	600 / 24	600 / 24	600 / 24	600 / 24
Height (mm / inches)	500 / 20	500 / 20	800 / 32	800 / 32	800 / 32	800 / 32	800 / 32	1200 / 48
Depth (mm / inches)	250 / 10	250 / 10	300 / 12	300 / 12	300 / 12	300 / 12	300 / 12	300 / 12
Weight (kg / lbs)	30 / 66	30 / 66	50 / 110	50 / 110	50 / 110	55 / 121	55 / 121	90 / 199

210 Sixth Avenue #3300, Pittsburgh, PA 15222, United States

+1-724-772-0044 **www.evoqua.com**

Wafer and Twistlok are trademarks of Evoqua Water Technologies LLC, its subsidiaries or affiliates, in some countries

NAM

Certification/Approvals: USEPA UVDGM, NSF61, CE Marked, MET UL Certified, NSF 50 - 3 Log Crypto, NVI

Common Option Features

Features	Standard Chamber Specification	Options
Lamp Life	9,000 Hours	
Lamp design	TWISTLOK™ Quick Release, Enhanced Safety - Medium Pressure	
Lamp and Wiper Access	Single Ended Access	
Design Pressure	150 psi Design (225 psi test)	
Number of Sensors	1-off (2-off for model WF-430-12)	
Variable Power	100% to 30% Power (automatic dose pacing)	
Connection Type	ANSI 150	
Generator Material	316L Stainless Steel	Superduplex (25Cr) Stainless Steel
Internal / External Finish	Electropolished	
Internal Surface Finish	125 Ra	
Quartz Type	High Purity Quartz	TiO2 Doped quartz
Mounting	Fixed Brackets	
Cleaning system	Automatic Wiper System	
Temperature Probe	AT-487 (PT-100)	
Vent Port	1/2" NPT (air release valve supplied for horizontal installations)	
Drain Port	1/4" NPT	
Sacrificial Anode - COMPONENT EXTRA	Included (aquatics applications only)	
Installation	Horizontal or Vertical (lamps must be horizontal)	

Common Option Features (continued)

Features	Standard Cabinet Specification	Options
Material	Epoxy Coated Mild steel - RAL 7035	Stainless Steel (304)
Control Type	Spectra 3 Microprocessor	
Power supply	Electronic Ballast	
Protection	NEMA12	NEMA4X
Ventilation	Forced Air (fan)	
Interface	Spectra Touch	Spectra Membrane
Communication	Modbus (RS-422 / RS-485)	Profibus DP, Modbus TCP, Ethernet IP
Protection	Door Locked MCCB Isolator	
Operating Temperature	Max Working Ambient 113ºF	
Digital Inputs	3-off selectable	Additional 3-off selectable
Digital Outputs	3-off selectable	Additional 3-off selectable
Analogue Inputs	1-off selectable	Additional 1-off selectable
Analogue Outputs	1-off selectable	Additional 1-off selectable

Unique Features

UV System	WF-115-3-N	WF-115-4-N	WF-125-6-N	WF-215-6-N	WF-215-8-N	WF-225-8-N	WF-230-10-N	WF-430-12-N
Number of Lamps	1	1	1	2	2	2	2	4
Connection Size (inch/mm)	ANSI/DN 3/80	ANSI/DN 4/100	ANSI/DN 6/150	ANSI/DN 6/150	ANSI/8/2 6/150	ANSI/DN 8/200	ANSI/DN 10/250	ANSI/DN 12/300
Power Consumption (variable)	0.7 - 1.6 kW	0.7 - 1.6 kW	1.1 - 2.7 kW	1.3 - 3.3 kW	1.3 - 3.3 kW	2.0 - 5.5 kW	2.6 - 6.6 kW	4.0 - 13.0 kW
200v - 50/60hz	Standard	Standard	Standard	Standard	Standard	N/A	N/A	N/A
208 - 240v 50/60hz	Standard	Standard	Standard	Standard	Standard	Standard	N/A	N/A
380v - 480v 50/60hz	N/A	N/A	N/A	N/A	N/A	Option	Standard	Standard
Cable length								
30 feet	Standard	Standard	Standard	Standard	Standard	Standard	Standard	Standard
45 feet	Option	Option	Option	Option	Option	Option	Option	Option
90 feet	Option	Option	Option	Requires local JB	Requires local JB	Option	Option	Option

Dimensions

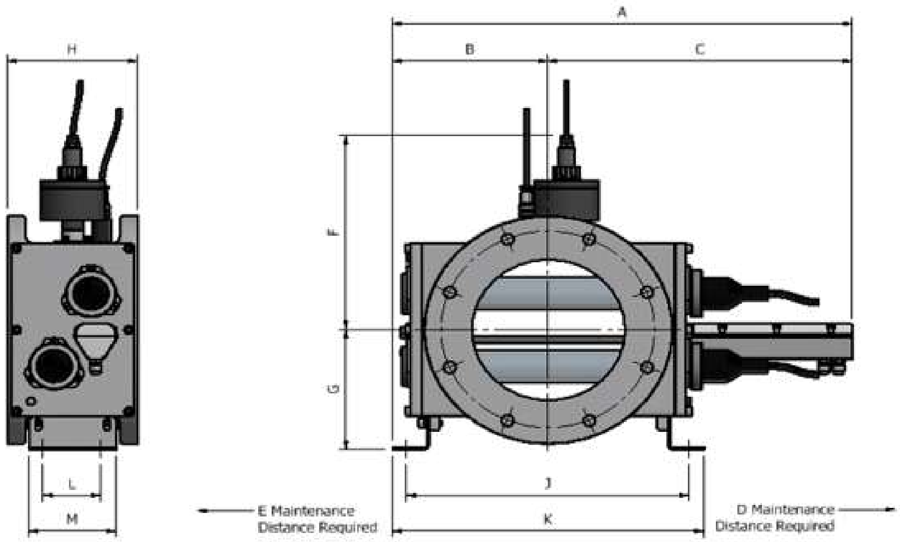

UV System	WF-115-3-N	WF115-4-N	WF-125-6-N	WF-215-6-N	WF-215-8-N	WF-225-8-N	WF-230-10-N	WF-430-12-N
Chamber Dimensions								
A (mm / inches)	520 / 20.3	520 / 20.3	635 / 24.8	635 / 24.8	635 / 24.8	635 / 24.8	795 / 31.0	795 / 31.0
B (mm / inches)	158 / 6.2	158 / 6.2	215 / 8.4	215 / 8.4	215 / 8.4	215 / 8.4	305 / 11.9	305 / 11.9
C (mm / inches)	362 / 14.1	362 / 14.1	420 / 16.4	420 / 16.4	420 / 16.4	420 / 16.4	490 / 19.1	490 / 19.1
D (mm / inches)	370 / 14.4	370 / 14.4	485 / 18.9	485 / 18.9	485 / 18.9	485 / 18.9	625 / 24.4	625 / 24.4
E (mm / inches)	250 / 9.8	250 / 9.8	250 / 9.8	250 / 9.8	250 / 9.8	250 / 9.8	250 / 9.8	250 / 9.8
F (mm / inches)	167 / 6.5	167 / 6.5	226 / 8.8	226 / 8.8	226 / 8.8	226 / 8.8	242 / 9.4	267 / 10.4
G (mm / inches)	122 / 4.8	122 / 4.8	180 / 7.0	180 / 7.0	180 / 7.0	180 / 7.0	233 / 9.1	258 / 10.1
H (mm / inches)	160 / 6.2	160 / 6.2	180 / 7.0	180 / 7.0	180 / 7.0	180 / 7.0	190 / 7.4	190 / 7.4
J (mm / inches)	275 / 10.7	275 / 10.7	390 / 15.2	390 / 15.2	390 / 15.2	390 / 15.2	560 / 21.8	560 / 21.8
K (mm / inches)	315 / 12.3	315 / 12.3	430 / 16.8	430 / 16.8	430 / 16.8	430 / 16.8	610 / 23.8	610 / 23.8
L (mm / inches)	80 / 3.1	80 / 3.1	80 / 3.1	80 / 3.1	80 / 3.1	80 / 3.1	140 / 5.5	140 / 5.5
M (mm / inches)	120 / 4.7	120 / 4.7	120 / 4.7	120 / 4.7	120 / 4.7	120 / 4.7	180 / 7.0	180 / 7.0
Dry Weight (kg / lbs)	27 / 60	26 / 57	57 / 126	58 / 128	53 / 117	53 / 117	78 / 172	88 / 194
Wet Weight (kg / lbs)	30 / 66	28 / 62	67 / 148	68 / 150	64 / 141	64 / 141	99 / 218	112 / 247
Cabinet Dimensions (NEMA12)								
Width (mm / inches)	500 / 20	500 / 20	600 / 24	600 / 24	600 / 24	600 / 24	600 / 24	600 / 24
Height (mm / inches)	500 / 20	500 / 20	800 / 32	800 / 32	800 / 32	800 / 32	800 / 32	1200 / 48
Depth (mm / inches)	250 / 10	250 / 10	300 / 12	300 / 12	300 / 12	300 / 12	300 / 12	300 / 12
Weight (kg / lbs)	30 / 66	30 / 66	50 / 110	50 / 110	50 / 110	55 / 121	55 / 121	90 / 199

210 Sixth Avenue #3300, Pittsburgh, PA 15222, United States
+1-724-772-0044 www.evoqua.com

Wafer and Twistlok are trademarks of Evoqua Water Technologies LLC, its subsidiaries or affiliates, in some countries

NAM

Certification/Approvals: USEPA UVDGM, NSF61, CE Marked, MET UL Certified, NSF 50 - 3 Log Crypto, NVI

Common Option Features

Features	Standard Chamber Specification	Options
Lamp Life	9,000 Hours	
Lamp design	TWISTLOK™ Quick Release, Enhanced Safety - Medium Pressure	
Lamp and Wiper Access	Single Ended Access	
Design Pressure	150 psi Design (225 psi test)	
Number of Sensors	1-off (2-off for model WF-430-12)	
Variable Power	100% to 30% Power (automatic dose pacing)	
Connection Type	ANSI 150	
Generator Material	316L Stainless Steel	Superduplex (25Cr) Stainless Steel
Internal / External Finish	Electropolished	
Internal Surface Finish	125 Ra	
Quartz Type	High Purity Quartz	TiO2 Doped quartz
Mounting	Fixed Brackets	
Cleaning system	Automatic Wiper System	
Temperature Probe	AT-487 (PT-100)	
Vent Port	1/2" NPT (air release valve supplied for horizontal installations)	
Drain Port	1/4" NPT	
Sacrificial Anode - COMPONENT EXTRA	Included (aquatics applications only)	
Installation	Horizontal or Vertical (lamps must be horizontal)	

Common Option Features (continued)

Features	Standard Cabinet Specification	Options
Material	Epoxy Coated Mild steel - RAL 7035	Stainless Steel (304)
Control Type	Spectra 3 Microprocessor	
Power supply	Electronic Ballast	
Protection	NEMA12	NEMA4X
Ventilation	Forced Air (fan)	
Interface	Spectra Touch	Spectra Membrane
Communication	Modbus (RS-422 / RS-485)	Profibus DP, Modbus TCP, Ethernet IP
Protection	Door Locked MCCB Isolator	
Operating Temperature	Max Working Ambient 113^{o}F	
Digital Inputs	3-off selectable	Additional 3-off selectable
Digital Outputs	3-off selectable	Additional 3-off selectable
Analogue Inputs	1-off selectable	Additional 1-off selectable
Analogue Outputs	1-off selectable	Additional 1-off selectable

Unique Features

UV System	WF-115-3-N	WF-115-4-N	WF-125-6-N	WF-215-6-N	WF-215-8-N	WF-225-8-N	WF-230-10-N	WF-430-12-N
Number of Lamps	1	1	1	2	2	2	2	4
Connection Size (inch/mm)	ANSI/DN 3/80	ANSI/DN 4/100	ANSI/DN 6/150	ANSI/DN 6/150	ANSI/8/2 6/150	ANSI/DN 8/200	ANSI/DN 10/250	ANSI/DN 12/300
Power Consumption (variable)	0.7 - 1.6 kW	0.7 - 1.6 kW	1.1 - 2.7 kW	1.3 - 3.3 kW	1.3 - 3.3 kW	2.0 - 5.5 kW	2.6 - 6.6 kW	4.0 - 13.0 kW
200v - 50/60hz	Standard	Standard	Standard	Standard	Standard	N/A	N/A	N/A
208 - 240v 50/60hz	Standard	Standard	Standard	Standard	Standard	Standard	N/A	N/A
380v - 480v 50/60hz	N/A	N/A	N/A	N/A	N/A	Option	Standard	Standard
Cable length								
30 feet	Standard	Standard	Standard	Standard	Standard	Standard	Standard	Standard
45 feet	Option	Option	Option	Option	Option	Option	Option	Option
90 feet	Option	Option	Option	Requires local JB	Requires local JB	Option	Option	Option

Dimensions

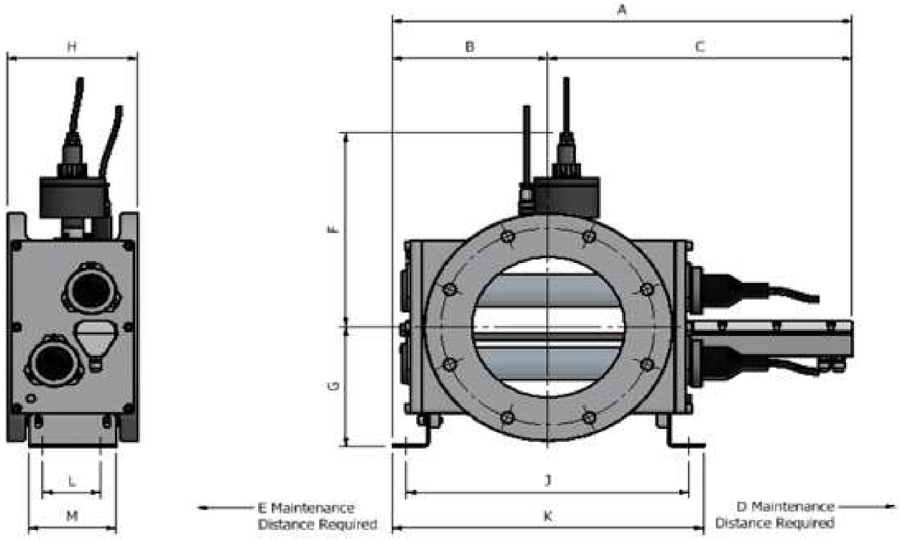

UV System	WF-115-3-N	WF115-4-N	WF-125-6-N	WF-215-6-N	WF-215-8-N	WF-225-8-N	WF-230-10-N	WF-430-12-N
Chamber Dimensions								
A (mm / inches)	520 / 20.3	520 / 20.3	635 / 24.8	635 / 24.8	635 / 24.8	635 / 24.8	795 / 31.0	795 / 31.0
B (mm / inches)	158 / 6.2	158 / 6.2	215 / 8.4	215 / 8.4	215 / 8.4	215 / 8.4	305 / 11.9	305 / 11.9
C (mm / inches)	362 / 14.1	362 / 14.1	420 / 16.4	420 / 16.4	420 / 16.4	420 / 16.4	490 / 19.1	490 / 19.1
D (mm / inches)	370 / 14.4	370 / 14.4	485 / 18.9	485 / 18.9	485 / 18.9	485 / 18.9	625 / 24.4	625 / 24.4
E (mm / inches)	250 / 9.8	250 / 9.8	250 / 9.8	250 / 9.8	250 / 9.8	250 / 9.8	250 / 9.8	250 / 9.8
F (mm / inches)	167 / 6.5	167 / 6.5	226 / 8.8	226 / 8.8	226 / 8.8	226 / 8.8	242 / 9.4	267 / 10.4
G (mm / inches)	122 / 4.8	122 / 4.8	180 / 7.0	180 / 7.0	180 / 7.0	180 / 7.0	233 / 9.1	258 / 10.1
H (mm / inches)	160 / 6.2	160 / 6.2	180 / 7.0	180 / 7.0	180 / 7.0	180 / 7.0	190 / 7.4	190 / 7.4
J (mm / inches)	275 / 10.7	275 / 10.7	390 / 15.2	390 / 15.2	390 / 15.2	390 / 15.2	560 / 21.8	560 / 21.8
K (mm / inches)	315 / 12.3	315 / 12.3	430 / 16.8	430 / 16.8	430 / 16.8	430 / 16.8	610 / 23.8	610 / 23.8
L (mm / inches)	80 / 3.1	80 / 3.1	80 / 3.1	80 / 3.1	80 / 3.1	80 / 3.1	140 / 5.5	140 / 5.5
M (mm / inches)	120 / 4.7	120 / 4.7	120 / 4.7	120 / 4.7	120 / 4.7	120 / 4.7	180 / 7.0	180 / 7.0
Dry Weight (kg / lbs)	27 / 60	26 / 57	57 / 126	58 / 128	53 / 117	53 / 117	78 / 172	88 / 194
Wet Weight (kg / lbs)	30 / 66	28 / 62	67 / 148	68 / 150	64 / 141	64 / 141	99 / 218	112 / 247
Cabinet Dimensions (NEMA12)								
Width (mm / inches)	500 / 20	500 / 20	600 / 24	600 / 24	600 / 24	600 / 24	600 / 24	600 / 24
Height (mm / inches)	500 / 20	500 / 20	800 / 32	800 / 32	800 / 32	800 / 32	800 / 32	1200 / 48
Depth (mm / inches)	250 / 10	250 / 10	300 / 12	300 / 12	300 / 12	300 / 12	300 / 12	300 / 12
Weight (kg / lbs)	30 / 66	30 / 66	50 / 110	50 / 110	50 / 110	55 / 121	55 / 121	90 / 199

210 Sixth Avenue #3300, Pittsburgh, PA 15222, United States

+1-724-772-0044 www.evoqua.com

Wafer and Twistlok are trademarks of Evoqua Water Technologies LLC, its subsidiaries or affiliates, in some countries

ATG UV TECHNOLOGY

THIRD-PARTY VALIDATION OF THE WF-115-4, WF-125-6, and WF-225-8 UV Reactors

February 2020

carollo
Engineers...Working Wonders With Water®

ATG UV TECHNOLOGY

THIRD-PARTY VALIDATION OF THE WF-115-4, WF-125-6, and WF-225-8 UV REACTORS

TABLE OF CONTENTS

LIST OF TABLES

LIST OF FIGURES

SUMMARY

The ATG WF-115-4, WF-125-6, and WF-225-8 closed-vessel ultraviolet (UV) disinfection systems were validated at a test facility located at the Groundwater Pumping Station of the Columbia Southshore Wellfield in Portland, Oregon. The results were analyzed in accordance with the UV Disinfection Guidance Manual (UVDGM) as part of the Long Term 2 Enhanced Surface Water Treatment Rule (LT2ESWTR), published by the United States Environmental Protection Agency (USEPA, 2006).

Figures 1.1a through 1.1c show an elevation view of the upstream side of the WF-115-4, WF-125-6, and WF-225-8 UV reactors, respectively. The WF-115-4 system uses one 1.5 kW medium-pressure (MP) lamp oriented perpendicular to the bulk flow. The WF-125-6 system uses one 2.5 kW MP lamp oriented perpendicular to the bulk flow. The WF-225-8 system uses two 2.5 kW MP lamps oriented perpendicular to the bulk flow. In each reactor, the quartz sleeve surrounding each lamp is equipped with a mechanical wiping mechanism to remove foulants that accumulate on the external surfaces of the sleeves. Each reactor was equipped with a single UV intensity sensor that monitored the output of the lamp(s). Each reactor used a control panel and external magnetic ballast to control system operation and monitor performance. Figure 1.2 shows a schematic of the installation piping at the validation facility in Portland.

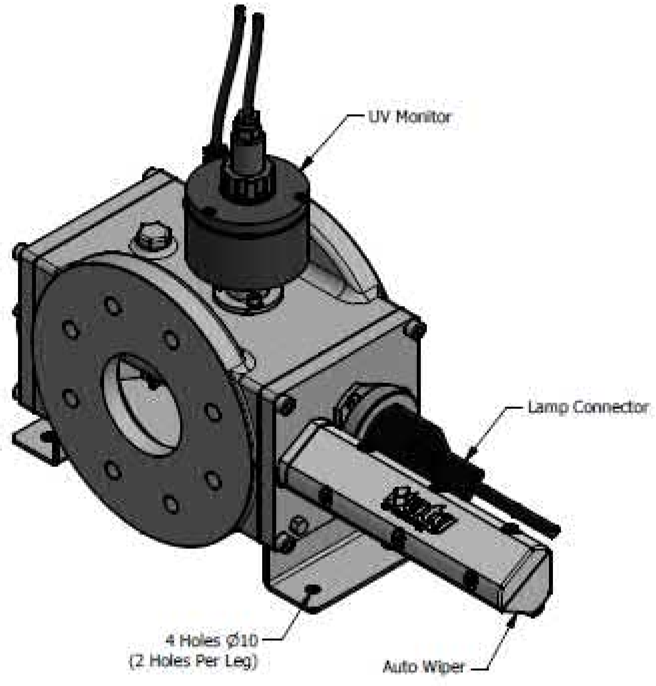

Figure 1.1a ATG WF-115-4 UV Reactor, isometric view. (Source: ATG)

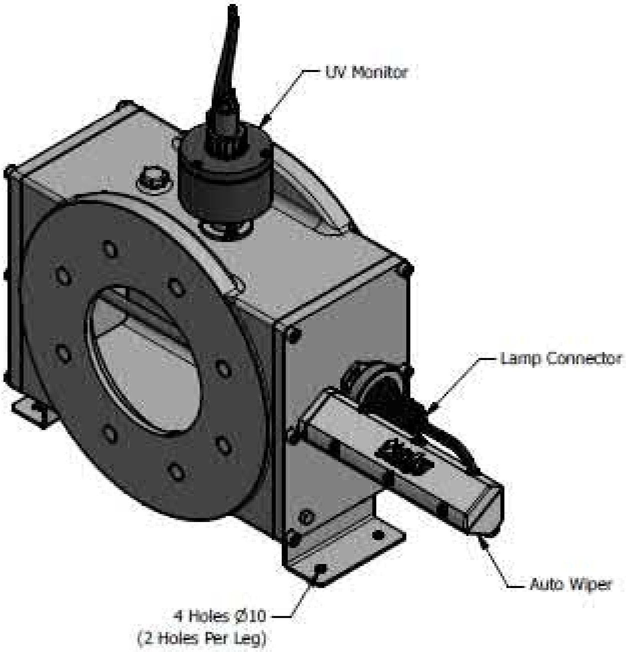

Figure 1.1b ATG WF-125-6 UV Reactor, isometric view. (Source: ATG)

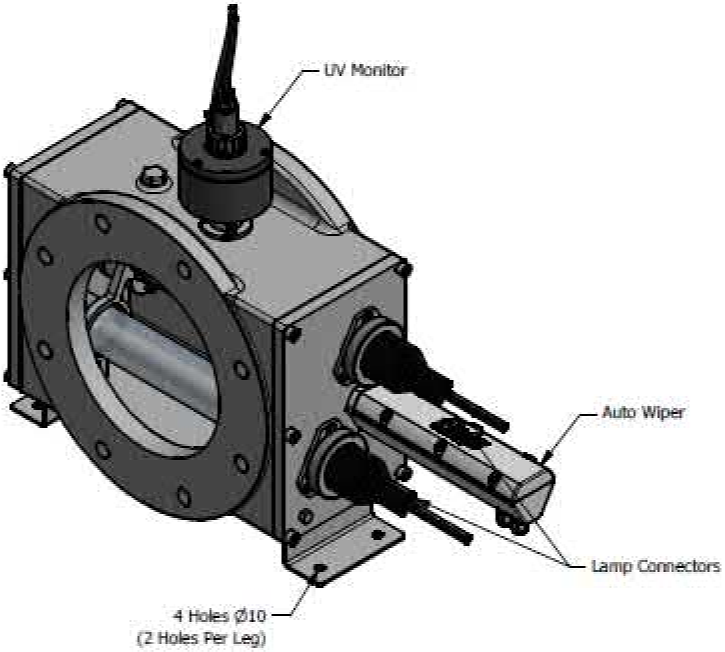

Figure 1.1c ATG WF-225-8 UV Reactor, isometric view. (Source: ATG)

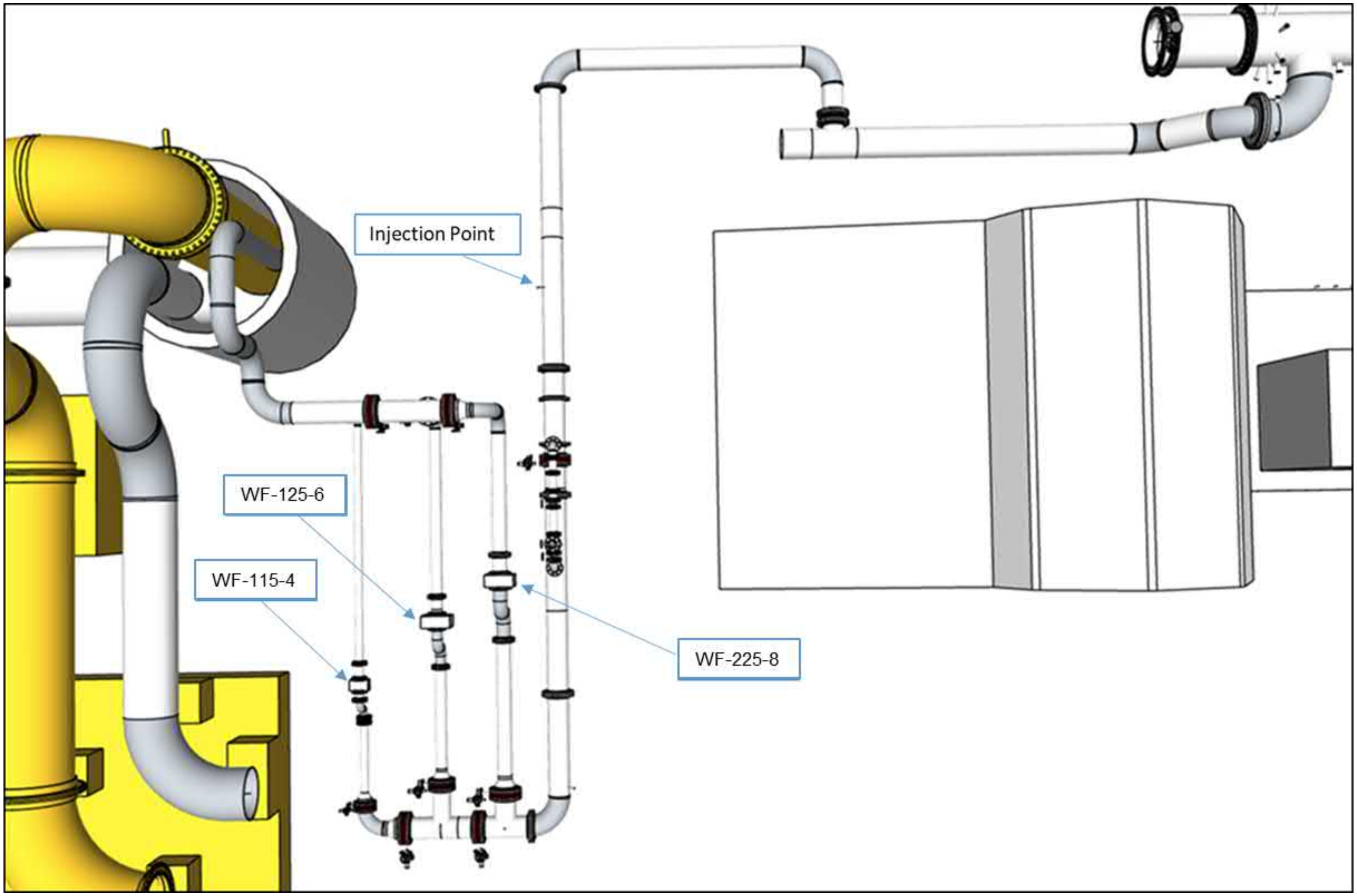

Figure 1.2 ATG Piping Configuration as Installed at the Validation Site in Portland

Functional testing of the ATG WF-115-4, WF-125-6, and WF-225-8 UV reactors was conducted on April 18, 2019. Biodosimetric testing was conducted on January 8, 9, 16, 2019, and March 12, 13, 14, 19, 2019. The UV reactors were validated under the third party oversight of Carollo Engineers, P.C. (Carollo). Microbial analysis was provided by GAP EnviroMicrobial Services (GAP) (London, Ontario, Canada). The challenge microbes were MS2 and T1UV phage and the UV absorber was calcium lignosulfonate (LSA) (Borregaard LignoTech of Rothschild, WI, USA). Analysis of the validation data was undertaken in accordance with the USEPA UVDGM (2006).

The test conditions of flow rate, UV transmittance (UVT), and lamp output were designed to validate the dose delivery by the UV reactors. UV intensity and log inactivation of MS2 and T1UV phage were measured at a range of lamp power settings (measured as lamp ampere), flow rates, and UVT. Table 1.1 provides the range of power settings, flow rates, and UVT used during the testing for each UV reactor. Table 1.1 also includes the range of MS2 and T1UV REDs measured during testing.

Table 1.1 Range of Power Settings, Flow Rate, UVT used During Testing

Reactors	Lamp Ampere Setting	Flow (m^3/hr)	UVT (%)	MS2 RED (mJ/cm^2)	T1UV RED (mJ/cm^2)
WF-115-4	5.1 – 11.0	5.1 – 114	65.4 – 99.3	13.6 – 181	4.50 – 25.7
WF-125-6	4.7 – 10.0	9.9 – 230	68.2 – 99.2	13.4 – 181	4.20 – 21.9
WF-225-8	4.6 – 10.0	14.6 – 503	69.9 – 99.6	5.02 – 227	6.14 – 29.9

1.1 UV SENSOR, POWER, AND DOSE ALGORITHMS

1.1.1 Power Equation

The power to the ATG WF-115-4, WF-125-6, and WF-225-8 UV reactors was monitored using a Fluke 434 power quality analyzer. The power relationship between power consumption (P, in W) and lamp ampere setting (P_L, A) is described in Equation 1.1a through 1.1c for the WF-115-4, WF-125-6, and WF-225-8, respectively:

$$\mathrm{P} = 0.0768 \times \mathrm{P_L}^{1.2966}$$ **Equation 1.1a**

$$\mathrm{P} = 0.1639 \times \mathrm{P_L}^{1.2022}$$ **Equation 1.1b**

$$\mathrm{P} = 0.2812 \times \mathrm{P_L}^{1.2630}$$ **Equation 1.1c**

Figure 1.3 presents the power consumption of the UV reactors as a function of the lamp ampere setting.

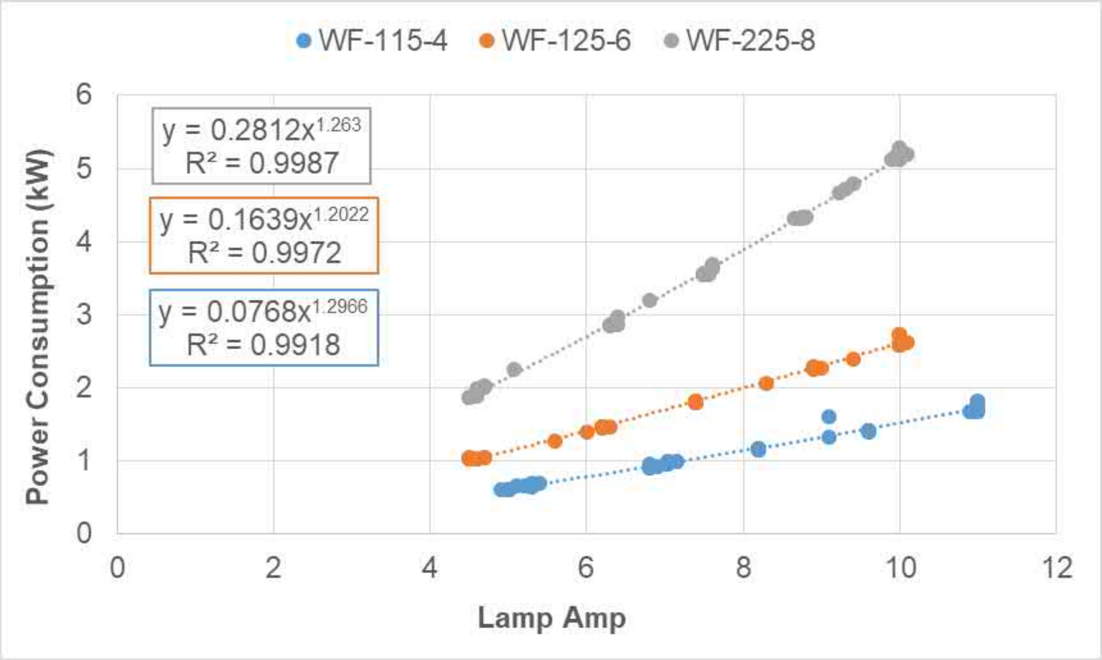

Figure 1.3 UV Reactor Power Consumption Measured as a Function of the Ballast Power Setting

1.1.2 UV Sensor Equation

The calibration of each reactor's duty UV sensor was checked by comparison with three reference UV sensors. The slope of the relation between average duty and reference UV sensor readings for all three reactors was 1.0383. The three reference UV sensors were tested for linearity and calibration at uv-technik Speziallampen GmbH in Wolfsberg, Germany.

The relationship between UV intensity, lamp ampere setting, and UVT was modelled using:

$$S = 10^A \times {P_L}^B \times (UVA - C)^D$$ **Equation 1.2**

where S is UV sensor intensity (W/m^2), UVA is the UV absorbance per cm of the test water at 254 nm, P_L is lamp ampere setting (A), and A through D are empirical coefficients provided in Table 1.2.

Table 1.2 UV Sensor Equation Coefficient Values (Equation 1.2)

Constants	WF-115-4	WF-125-6	WF-225-8
A	17.202	-3.2676	-1.5978
B	1.5144	1.4761	1.5282
C	-3.8897	-0.20198	-0.11559
D	-27.891	-5.4742	-2.5972
100% lamp power	11 Amperes	10 Amperes	10 Amperes

1.1.3 UV Dose Equation

The log inactivation, log *i*, measured during biodosimetric validation was modeled using:

$$\log i = 10^{A + B \times UVA} \times UVA^{C + D \times UVA} \times \left(\frac{S/S_0}{Q \times D_L} \right)^{E + F \times UVA + G \times UVA^2} \qquad \textbf{Equation 1.3}$$

where D_L is the UV sensitivity (mJ/cm^2/log *i*), S/S_0 is the relative lamp output, Q is the flow rate (m^3/hr), and A through G are empirical coefficients presented in Table 1.3.

Table 1.3 Model Coefficients for Equation 1.3 Obtained Using Multivariate Non-Linear Regression

Coefficient	WF-115-4	WF-125-6	WF-225-8
A	2.6794	3.5360	3.8127
B	-2.5083	0	0
C	-0.17837	0	0
D	0	11.970	9.6997
E	0.86151	0.88478	0.86730
F	0	-2.0396	-1.2419
G	0	4.8188	2.9679
R-squared	0.9900	0.9939	0.9969
St. Dev. of Residuals (log units)	0.18318	0.14416	0.11966

1.1.4 Calculated Dose Approach without UVT monitoring

If the UV sensor is optimally positioned, the relationships between the log inactivation and a combined variable (defined as $S/Q/D_L$) at different UVTs tend to align on top of each other. If those relationships align on top of each other, a single relationship between log inactivation and the combined variable can be defined for efficient UV dose monitoring that does not require an online UVT monitor as:

$$\log i = f\left(\frac{S}{Q \times D_L}\right) \qquad \textbf{Equation 1.4}$$

where *f* is a mathematical function that describes the relation between the log inactivation and the combined variable ($S/Q/D_L$).

Depending on the UV reactor, the minimum log inactivation at a given value of $S/Q/D_L$ occurred at an intermediate UVT or at the minimum UVT (70 percent). Above and below that intermediate UVT value and above the minimum value, the measured log inactivation is larger. A UV dose monitoring algorithm that does not require UVT as an input can be defined by those minimum log i values. The relationship between minimum log inactivation and $S/Q/D_L$ for each reactor was best fit with a power function:

$$\log i = A' \times \left(\frac{S}{Q \times D_L}\right)^{B'} \qquad \textbf{Equation 1.5}$$

where S is the measured UV sensor value (W/m^2), Q is the flow rate (m^3/hr), D_L is the UV sensitivity of the microbe, and the coefficients A’ and B’ are provided in Table 1.4.

Table 1.4 Coefficients for Equation 1.5

Reactor	A'	B'	Maximum log i	Max Log I + U_{in}
WF-115-4	6.8279	0.85699	6.08	6.44
WF-125-6	39.482	0.83263	6.21	6.50
WF-225-8	40.400	0.82730	6.91	7.15

1.1.5 UV Dose Monitoring

The reduction equivalent dose (RED) delivered by the UV reactors can be predicted using:

$$RED = \log i \times D_L \qquad \textbf{Equation 1.6}$$

If Equation 1.3 is used to predict log inactivation, the RED is expressed as:

$$RED = log\ i \times D_L = 10^{A + B \times UVA} \times UVA^{C + D \times UVA} \times \left(\frac{{}^{S}/_{S_0}}{Q \times D_L}\right)^{E + F \times UVA + G \times UVA^2} \times D_L$$

Equation 1.7

If Equation 1.5 is used to predict log inactivation, the RED is expressed as:

$$RED = logi \times D_L = \left[A' \times \left(\frac{S}{Q \times D_L}\right)^{B'}\right] \times D_L$$ **Equation 1.8**

The relative lamp output used in Equations 1.3 and 1.7 is determined from the UV sensor readings using the following approach:

Step 1. Calculate the value S_0 as the UV sensor reading predicted using Equation 1.2 with P_L set to 11 for the WF-115-4, and P_L set to 10 for the WF-125-6 and WF-225-8.

Step 2. Calculate the relative lamp output (S/S_0), where S is the measured UV intensity.

The UV sensitivity, D_L is determined using:

$$D_L = {}^{D}\!/_{log\ i}$$ **Equation 1.9**

where log *i* is the predicted log inactivation obtained using Equation 1.3, and D is the UV dose associated with that log inactivation determined using the UV dose-response curve of the microbe.

The UV dose-response of MS2 and T1UV phage measured during validation was modeled using:

$$Dose = A \times logi + B \times logi^2$$ **Equation 1.10**

where A and B are constants given in Table 1.5.

Substituting Equation 1.10 into Equation 1.9, the UV sensitivity of MS2 and T1UV phage is given as:

$$D_L = A + B \times \log i$$ **Equation 1.11**

Table 1.5 also provides the maximum log inactivation measured with the challenge microbe UV dose-response curves. Equations 1.9, 1.10, and 1.11 should not be extrapolated beyond the upper bound.

Table 1.5 Model Coefficients for Equation 1.10 and 1.11

Microbe	Coefficient A	Coefficient B	log *i* Upper Limit
MS2	16.112	2.0267	7.65 log
T1UV	4.5809	0.077114	6.20 log

Equations 1.3 and 1.7 or 1.5 and 1.8 will predict the log inactivation and RED of *Cryptosporidium*, Giardia and adenovirus if the value of D_L used in the equation is determined using the UV dose requirements for those pathogens specified by the Long Term 2 Enhanced Surface Water Treatment Rule. Using linear interpolation of the UV dose

requirements, the UV sensitivity of *Cryptosporidium*, Giardia, and viruses for log inactivation from 0.0 to 6.0 log can be determined using:

$$D_L = m \times D + b$$ **Equation 1.12**

where m and b are coefficients tabulated in Table 1.6 and D is the UV dose that corresponds to the range of log inactivation values of interest. The UV dose-response of *Cryptosporidium,* Giardia, and adenovirus beyond 6.0 log can be conservatively estimated by extrapolating Equation 1.12 using the coefficients in Table 1.6 for 5.5 to 6.0 log inactivation.

Table 1.6 Coefficients for Linear Interpolation of UV Sensitivity

Log I	UV Dose (mJ/cm²)	*Crypto*		UV Dose (mJ/cm²)	*Giardia*		UV Dose (mJ/cm²)	Adenovirus	
		m	b		m	b		m	b
0 - 0.5	0.0 to 1.6	0.0000	3.200	0.0 to 1.5	0.0000	3.000	0.0 to 39	0.000	78.00
0.5 - 1.0	1.6 to 2.5	-0.7777	4.444	1.5 to 2.1	-1.500	5.250	39 to 58	-1.052	119.0
1.0 - 1.5	2.5 to 3.9	0.07143	2.321	2.1 to 3.0	-0.1111	2.333	58 to 79	-0.2539	72.73
1.5 - 2.0	3.9 to 5.8	0.1578	1.984	3.0 to 5.2	0.2727	1.181	79 to 100	-0.1269	62.69
2.0 - 2.5	5.8 to 8.5	0.1851	1.825	5.2 to 7.7	0.1920	1.601	100 to 121	-0.07619	57.61
2.5 - 3.0	8.5 to 12	0.1714	1.942	7.7 to 11	0.1777	1.711	121 to 143	-0.03333	52.43
3.0 - 3.5	12 to 15	0.09524	2.857	12 to 15	0.1547	1.964	143 to 163	-0.05476	55.49
3.5 - 4.0	15 to 22	0.1734	1.683	15 to 22	0.1734	1.683	163 to 186	-0.003106	47.07
4.0 - 4.5	22 to 30	0.1458	2.292	22 to 28	0.1204	2.852	186 to 208	-0.01263	48.85
4.5 - 5.0	30 to 45	0.1556	2.000	28 to 42	0.1556	1.867	208 to 231	-0.00097	46.42
5.0 - 5.5	45 to 64	0.1388	2.756	42 to 60	0.1394	2.545	231 to 253	-0.00909	48.30
5.5 - 6.0	64 to 85	0.1205	3.925	60 to 84	0.1288	3.182	253 to 276	0.00000	46.00

Since the value of D_L depends on the predicted log i, the value of log i predicted using Equation 1.3 or 1.5 must be determined using an iterative approach. Section 5.5 of this report describes an approach for conducting the iteration with example calculations.

1.2 VALIDATED RANGE

Figures 1.4 through 1.6 provide the validated range of UVT as a function of flow and the validated range of predicted log inactivation as a function of UVT for the WF-115-4, WF-125-6, and WF-225-8 UV reactors, respectively. If Equation 1.3 is used for UV dose monitoring, the figures define the validated range for the reactor. Note that the upper limit of the validated range of log i is defined as predicted log i plus the uncertainty of interpolation as defined in section 1.3.2.1. Tables 1.7 through 1.9 provide the coordinates for the bounds of the validated range boundaries.

If Equation 1.5 is used for dose monitoring and the measured flow rate is less than the validated range, the lower limit of the flow rate should be used as an input to Equation 1.5. However, Equation 1.5 provides valid predictions of log inactivation at all UVTs lower and higher than that value. If the calculated log inactivation is greater than the upper bound of the log inactivation range given in Table 1.4, the upper limit should be reported as the delivered log inactivation. The UV system operation is off specification if the flow rate is greater than the maximum validated flow rate.

Table 1.7 Validation Envelope Bounds for Figure 1.4 (WF-115-4)

Figure 1.4a		**Figure 1.4b**		
Q (m^3/hr)	**UVT (%)**	**UVT (%)**	**log i**	**log I plus U_{in}**
5.94	65.36	69.46	0.00	-
5.14	69.30	69.46	1.15	-
5.23	97.42	65.36	3.30	3.66
50.63	99.15	69.30	4.09	4.45
105.20	99.25	86.52	6.08	6.44
114.14	87.90	97.42	5.27	5.63
100.39	70.13	98.73	4.81	-
-	-	99.15	3.04	-
-	-	99.15	0.00	-

Table 1.8 Validation Envelope Bounds for Figure 1.5 (WF-125-6)

Figure 1.5a		**Figure 1.5b**		
Q (m^3/hr)	**UVT (%)**	**UVT (%)**	**log i**	**log I plus U_{in}**
9.86	71.45	68.23	0.00	-
10.14	85.91	68.23	1.32	-
22.56	95.35	69.80	3.31	-
28.46	97.84	69.98	4.31	4.60
76.39	98.18	85.91	5.42	5.71
198.47	99.23	95.35	5.79	6.08
230.28	87.89	97.84	6.21	6.50
200.57	70.17	99.23	3.38	-
30.67	68.23	99.23	0.00	-

Table 1.9 Validation Envelope Bounds for Figure 1.6 (WF-225-8)				
Figure 1.6a		Figure 1.6b		
Q (m³/hr)	UVT (%)	UVT (%)	log i	log I plus U_{in}
14.61	69.91	69.91	0.00	-
24.54	94.18	69.91	2.57	-
261.3	97.99	70.01	6.04	6.27
498.94	99.64	87.63	6.60	6.83
500.25	87.49	94.18	6.91	7.15
496.84	70.84	99.64	5.71	5.9594
-	-	99.06	1.89	-
-	-	99.06	0.00	-

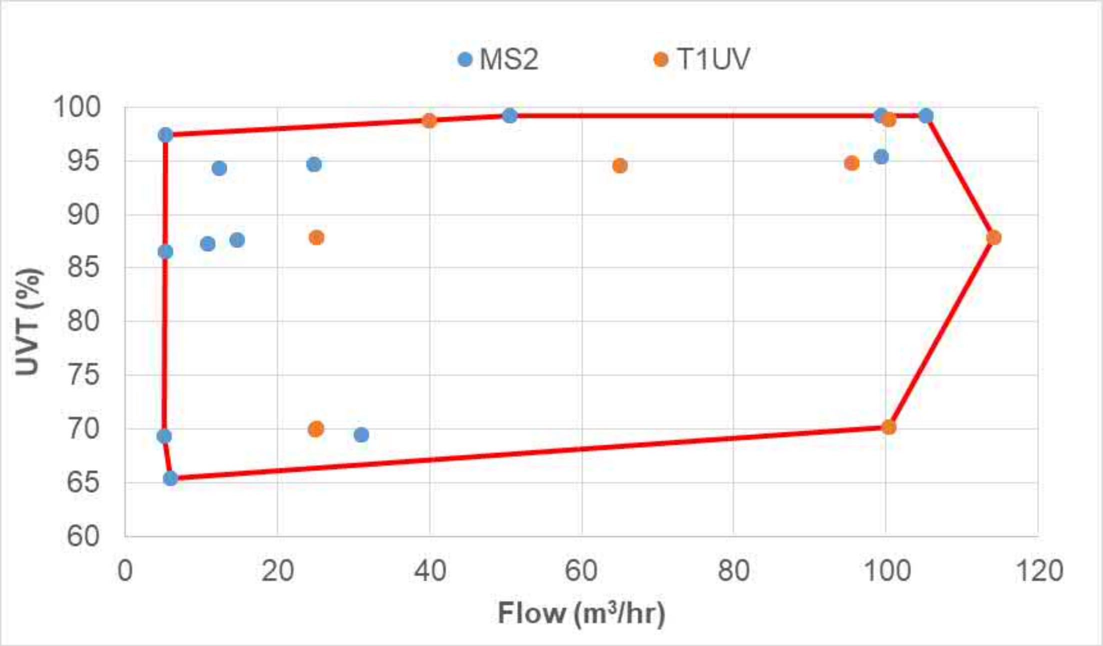

Figure 1.4a Validated Range of UVT versus Flow for the WF-115-4

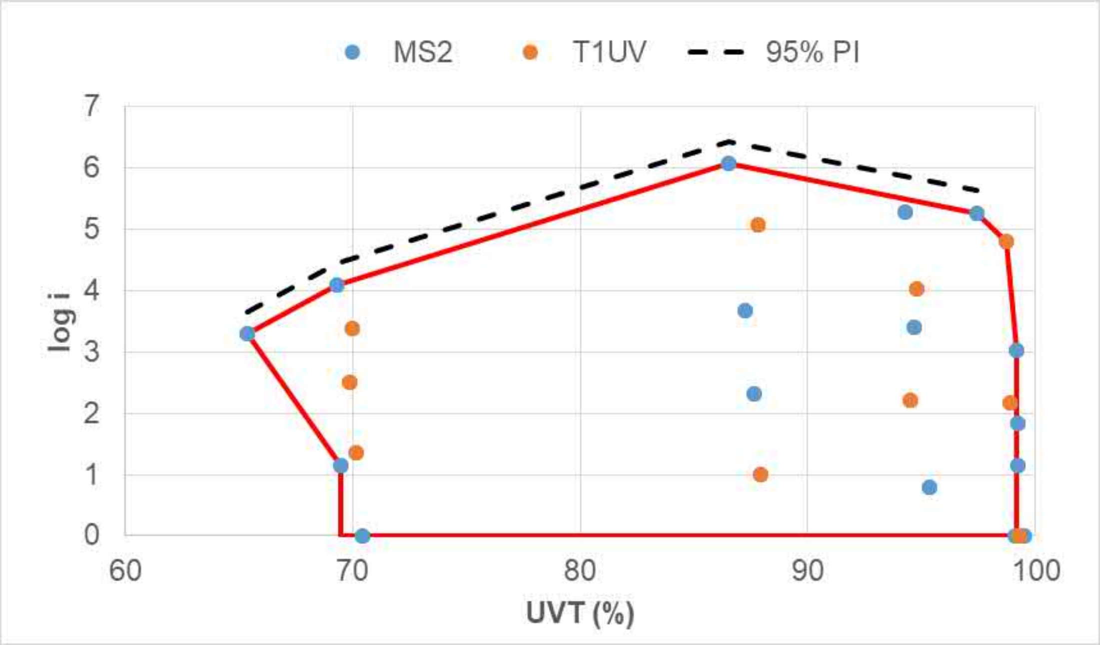

Figure 1.4b Validated Range of Predicted Log Removal versus UVT for WF-115-4

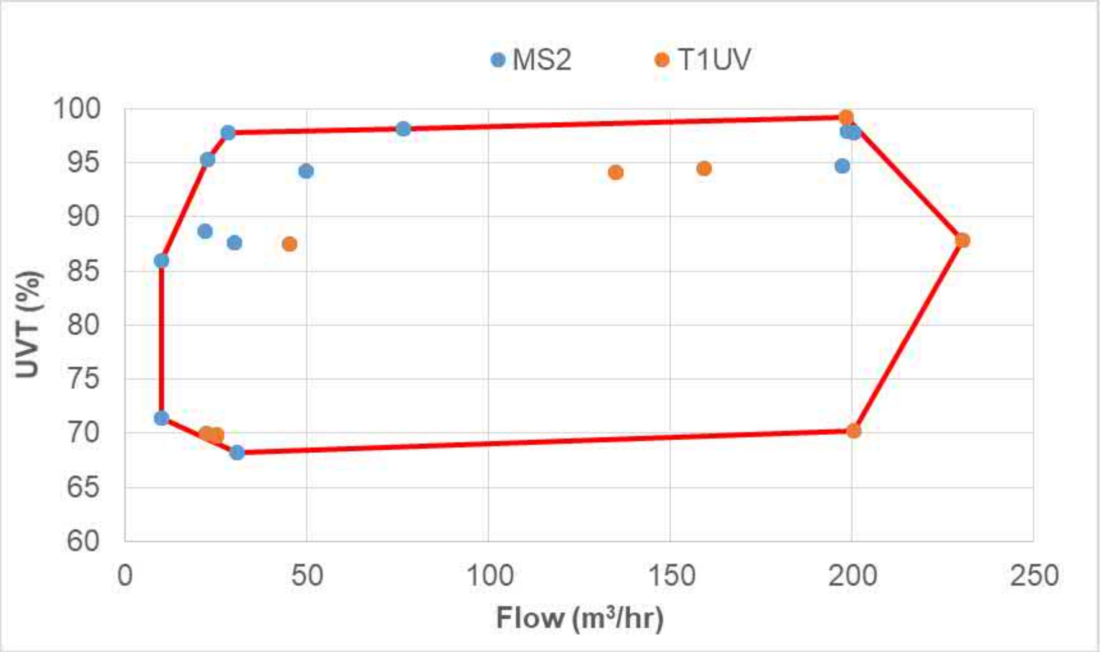

Figure 1.5a Validated Range of UVT versus Flow for the WF-125-6

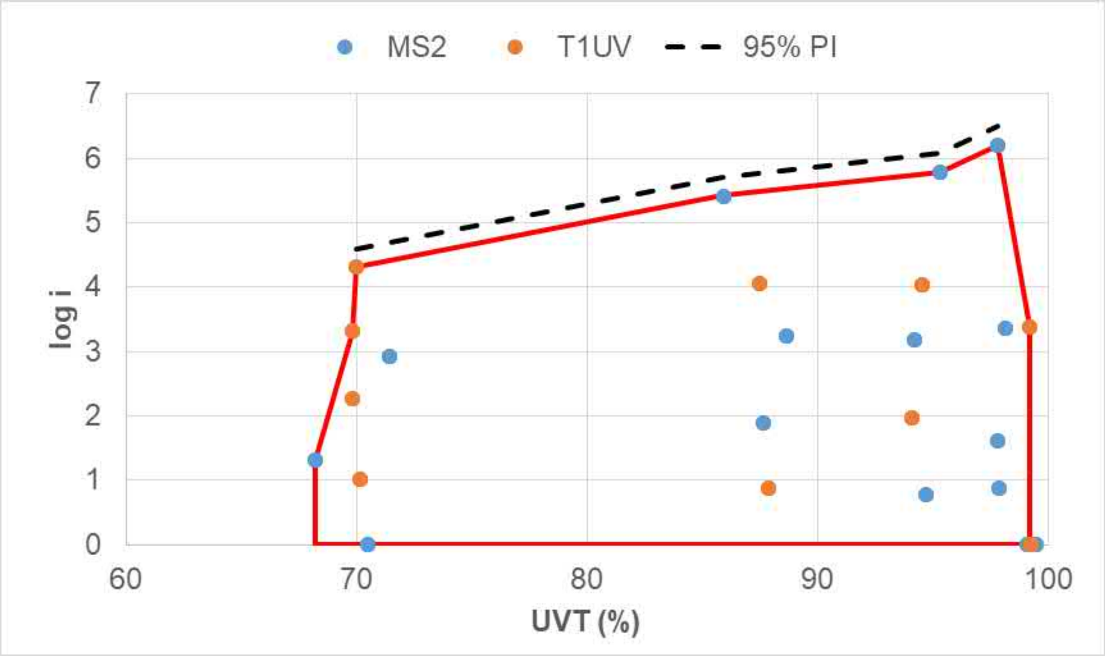

Figure 1.5b Validated Range of Predicted Log Removal versus UVT for WF-125-6

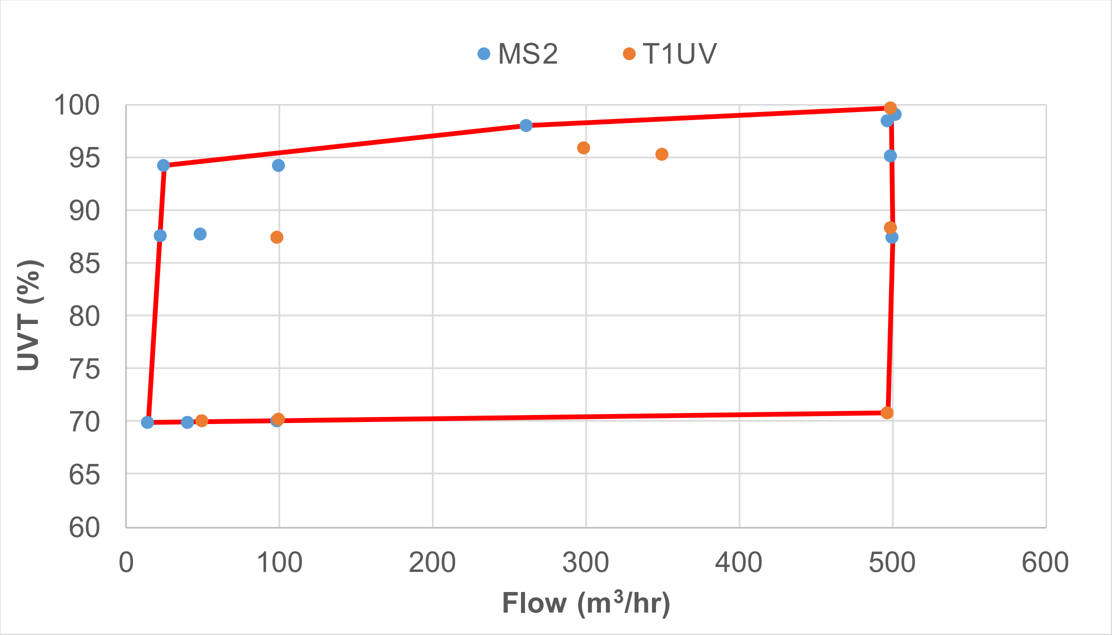

Figure 1.6a Validated Range of UVT versus Flow for the WF-225-8

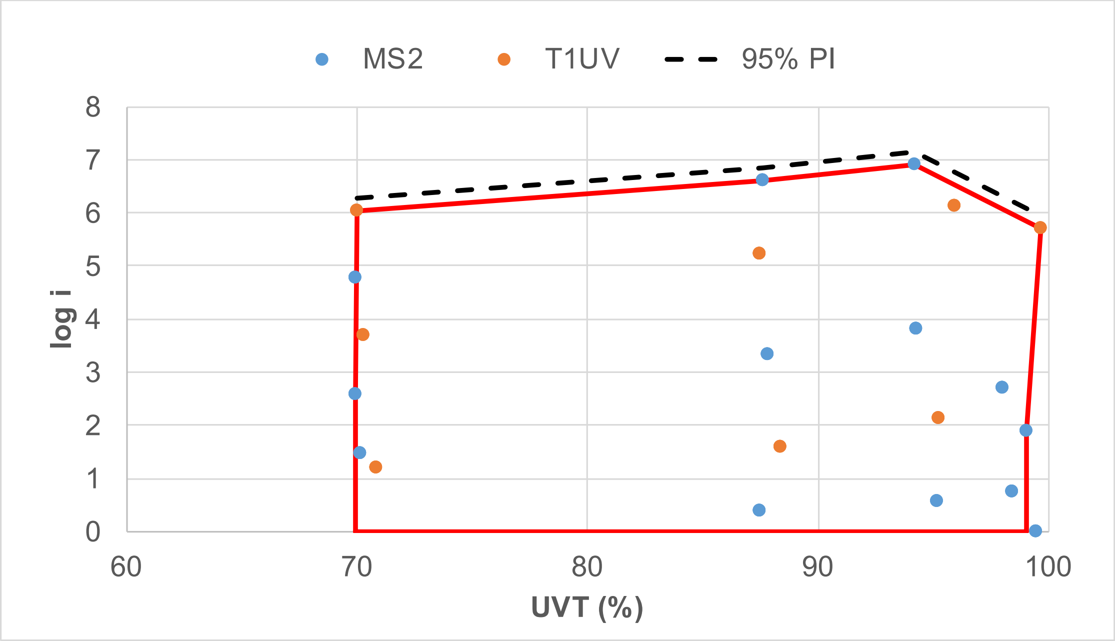

Figure 1.6b Validated Range of Predicted Log Removal versus UVT for WF-225-8

The UVDGM (Table 6-6) defines the validated range for the calculated dose approach in terms of flow rate, UVT and RED but not relative lamp output, S/S_0. The validation data set includes control samples measured with the lamps turned off (i.e. $S/S_0 = 0$) that show no log reduction. The validation analysis also shows that log inactivation is predicted as a function of a combined variable $S/S_0/Q/D_L$ for a given UVT with a single relationship that passes through the origin, as shown in Figures 1.7 through 1.9 for the WF-115-4, WF-125-6, and WF-225-8, respectively. The analysis shows that log inactivation can be interpolated along this curve, including values of S/S_0 down to zero.

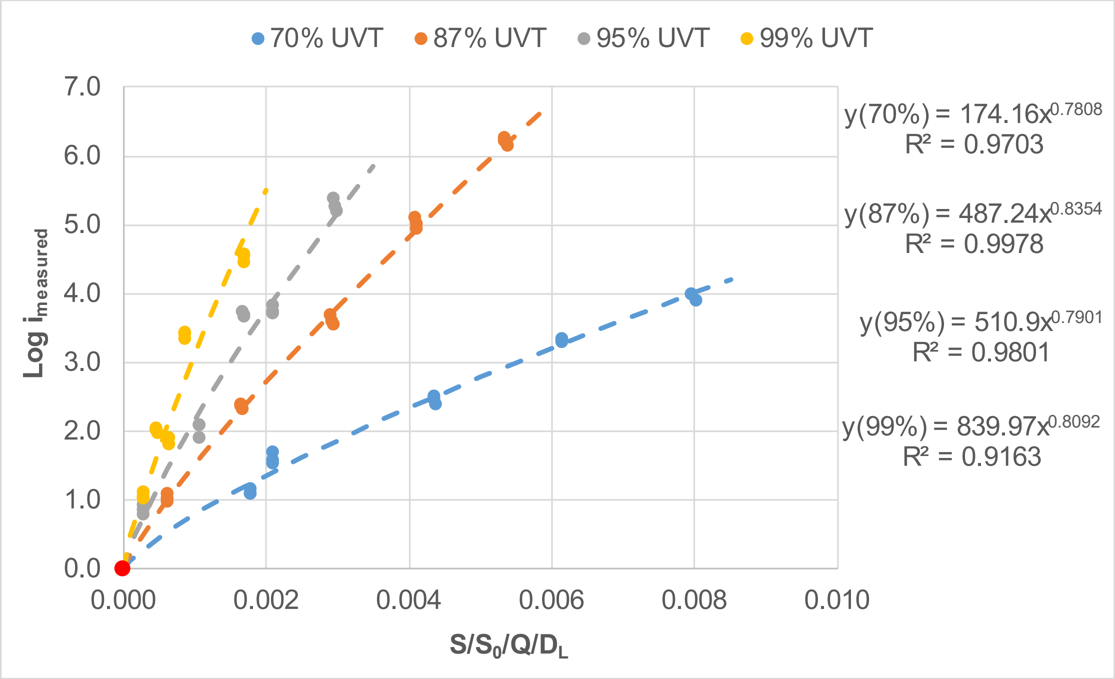

Figure 1.7 **Measured log inactivation as a function of $S/S_0/Q/D_L$ for the WF-115-4**

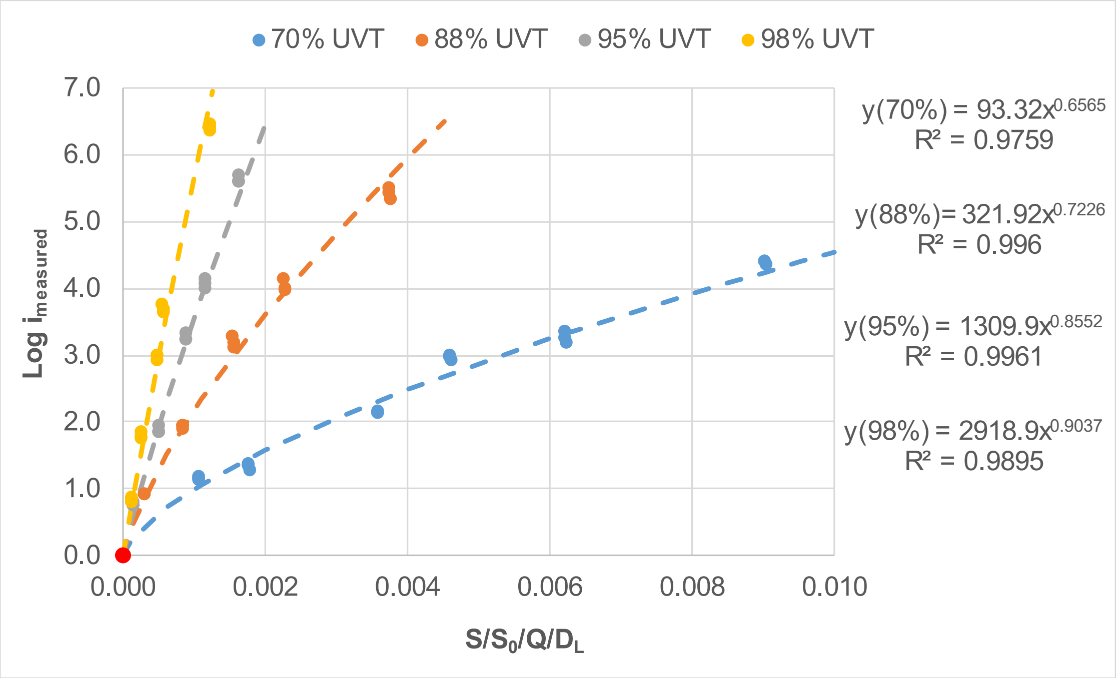

Figure 1.8 **Measured log inactivation as a function of $S/S_0/Q/D_L$ for the WF-125-6**

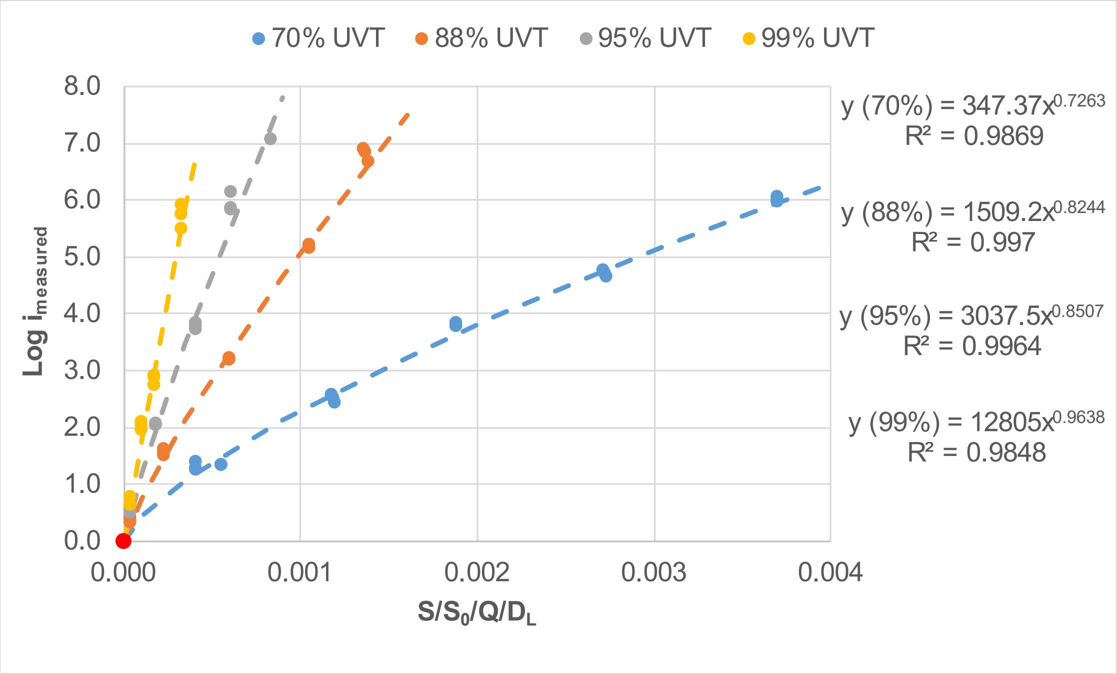

Figure 1.9 **Measured log inactivation as a function of $S/S_0/Q/D_L$ for the WF-225-8**

1.3 INACTIVATION CREDIT

Table 1.10 tabulates the UV dose requirements given by the Long Term 2 Enhanced Surface Water Treatment Rule (LT2ESWTR) and the USEPA draft document entitled "Innovative Approaches for Validation of Ultraviolet Disinfection Reactors for Drinking Water Systems" for various levels of *Cryptosporidium*, Giardia, and virus inactivation credit.

Table 1.10 **UV Dose Requirements for Pathogen Inactivation Credit as Defined by the LT2ESWTR**

Target Pathogens	UV dose (mJ/cm²) required for a log inactivation of:											
	0.5 log	1.0 log	1.5 log	2.0 log	2.5 log	3.0 log	3.5 log	4.0 log	4.5 log	5.0 log	5.5 log	6.0 log
Cryptosporidium	1.6	2.5	3.9	5.8	8.5	12	15	22	30	45	64	85
Giardia	1.5	2.1	3.0	5.2	7.7	11	15	22	28	42	60	84
Adenovirus	39	58	79	100	121	143	163	186	208	231	253	276

To obtain disinfection credit, the UV reactor must deliver a validated dose, D_{val}, that is equal to or greater than the dose requirement specified by the LT2ESWTR. The USEPA UVDGM (2006) states that the validated dose is determined using:

$$D_{val} = {}^{RED}\!/_{VF} \qquad \textbf{Equation 1.13}$$

where VF is the validation factor and RED is predicted using Equations 1.7 or 1.8.

The validation factor is determined using:

$$VF = B_{RED} \times \left(1 + {U_{val}}\!\left/{100}\right.\right)$$ **Equation 1.14**

where B_{RED} is the RED bias factor and U_{val} is the percent uncertainty of validation.

1.3.1 RED Bias Factor

Equations 1.7 or 1.8 predict RED accounting for the UV sensitivity of the microbe, D_L. These equations can be used to predict the RED of the test microbes MS2 and T1UV phage by setting the value of D_L to the value expected with those microbes. Alternatively, these equations can be used to predict the RED of the target pathogen (e.g. *Cryptosporidium*) by setting the value of D_L to the value expected with that pathogen. With this analysis, it is assumed that the RED is predicted using the value of D_L set to UV sensitivity of the target pathogen. Section 5.8.1 (page 5-30) of the UVDGM states that if the validation equations are used to predict the RED delivered to the target pathogen, the RED bias can be set to 1.0.

1.3.2 Uncertainty of Validation

The uncertainty of validation, U_{val}, is calculated using:

$$U_{val} = \sqrt{U_{IN}^2 + U_{DR}^2 + U_S^2}$$ **Equation 1.15**

where U_{IN} is the uncertainty of interpolation of the dose monitoring equation, U_{DR} is the uncertainty of the fit to the UV dose-response data of the test microbes, and U_S is the uncertainty of the UV sensors used during validation.

1.3.2.1 Uncertainty of Interpolation

The uncertainty of interpolation is calculated using:

$$U_{IN} = \frac{t \times D_L \times SD'}{RED} \times 100\%$$ **Equation 1.16**

where t is a Student’s t-statistic at a 95 percent confidence level, SD is the standard deviation of the differences between the log inactivation measured during validation and the log inactivation predicted by Equation 1.3, and D_L is the UV sensitivity of the microbe.

The uncertainty of interpolation in units of log inactivation is:

$$U'_{IN} = t \times SD'$$ **Equation 1.17**

Table 1.11 presents the values of *t* and *SD* used in Equation 1.17.

Table 1.11 Uncertainty of Interpolation for Equation 1.3			
Parameter	**WF-115-4**	**WF-125-6**	**WF-225-8**
Number of Data Points, N	78	75	61
Number of Parameters, P	4	5	5
Student's t-statistic	1.9925	1.9944	2.0032
Equation 1.3 St. Dev.	0.18318	0.14416	0.11966
U_{IN}	0.36499	0.28753	0.23971

1.3.2.2 Uncertainty of UV Dose Response

The UVDGM states that the uncertainty of the fit of the test microbe dose-response can be determined using:

$$U_{DR} = \frac{CI}{UV Dose} \times 100\% \qquad \textbf{Equation 1.18}$$

where CI is the confidence interval at the specified dose calculated using statistical approaches (e.g., Draper and Smith, 1998). The UV Dose value should be predicted as a function of log i and the UV dose response coefficients (A and B) of the collimated beam dose response curve, as tabulated in Table 1.12.

The uncertainty of the UV dose-response for MS2 and T1UV phage is calculated as a confidence interval using the statistical approach provided in Appendix I. Table 1.12 shows the value of U_{DR} at 1 log. Since the uncertainty of all of the UV dose-response curves was less than 15 percent the most conservative uncertainty was modeled using a quadratic fit:

$$U_{DR} = A + B(\log i) + C(\log i)^2 \qquad \textbf{Equation 1.19}$$

where A = 12.34, B = -3.514, and C = 0.3197.

If the U_{DR}, calculated using Equation 1.19, is greater than 15 percent, then the calculated U_{DR} is used in Equation 1.15. If the U_{DR} is less than 15 percent, then the U_{DR} value in Equation 1.15 will be zero.

Table 1.12 U_{DR} at 1-log Inactivation					
Test Microbe	**Date**	**Sample ID**	**U_{DR} at 1-log (%)**	**Coefficient A**	**Coefficient B**
MS2	1/8/2019	101	4.60	15.626	2.023
MS2	1/16/2019	409	5.80	15.302	2.283
MS2	3/13/2019	407	5.46	16.351	2.013
MS2	3/14/2019	617	7.11	16.530	1.795
MS2	3/19/2019	819	9.10	14.725	2.465
T1UV	3/12/2019	416	5.37	4.5337	0.097917
T1UV	3/19/2019	820	8.70	4.8749	0.00

1.3.2.3 Uncertainty of UV Sensors

The UVDGM states the value of the uncertainty of the UV sensors used in Equation 1.15 can be set to zero if the uncertainty is less than 10 percent. The UVDGM also states that the uncertainty of the UV sensors can be defined as the largest difference observed between the duty and reference UV sensors during validation.

In the case of the WF-115-4, WF-125-6, and WF-225-8 UV reactors, differences between the average duty UV sensors and the average reference UV sensor reading had an average and standard deviation of -1.34 and 2.42 percent, respectively, and ranged from -6.34 to 1.31 percent. The differences were all within the 10 percent criteria for reference UV sensor checks given in the 2006 UVDGM, and the value of U_S was set to zero.

1.3.3 Polychromatic Bias

The polychromatic bias accounts for spectral differences between validation and operation of the UV system for pathogen inactivation credit at the water treatment plant. The polychromatic bias only occurs with UV systems using polychromatic lamps and can be caused by:

1. Differences in the spectral response or action spectra of the test microbes used during validation and the target pathogen.

2. Spectral changes in UV lamp output due to lamp and quartz sleeve aging and fouling.

3. Differences in the UV absorbance spectra during validation and with application at the WTP

1.3.3.1 Action Spectra

Water Research Foundation (WRF) Project 4376 found that while the action spectra of MS2 and *Cryptosporidium* at wavelengths above 240 nm are similar, the action spectrum of MS2 phage is greater than that of *Cryptosporidium* at wavelengths below 240 nm. If wavelengths below 240 nm significantly contribute to UV dose delivery measured during validation, validation conducted using MS2 phage will overstate the inactivation expected with *Cryptosporidium*. A similar issue with action spectra differences exists with T1UV phage and *Cryptosporidium*.

The difference between the action spectra of MS2 and *Cryptosporidium* at wavelengths below 240 nm is not addressed by the UVDGM. Instead, the UVDGM states that the action spectra of *Cryptosporidium* and MS2 phage are similar enough that no action spectra correction factor is required. However, this conclusion is based on an analysis of the germicidal UV output of MP lamps as provided in the 2003 draft UVDGM. That analysis was based on a MP lamp that had negligible UV output (below 240 nm) and is not applicable with today’s MP lamps.

The UVDGM approach for calculating the ASCF does not account for the impact of the sleeve UV transmittance (UVT) and the UV absorbance of the water during validation. To address this issue, WRF Project 4376 developed tables of ASCF values that can be generally applied to UV systems using polychromatic medium-pressure lamps. Appendix B of the final report for Project 4376 provides ASCF values for Cryptosporidium and Giardia credit for five validation water types, four of which are used at the Portland UV Validation Facility. With each water Type, ASCF values are provided for the UV reactor equipped with Type 219, Type 214, or synthetic quartz sleeves. With each water and sleeve type, ASCF values are provided for six validation test microbes, including MS2 and T1UV phage.

Based on the analysis of the absorbance of the water, the transmittance of the quartz sleeves, and the output of the MP UV lamps used during this validation, average ASCF values were determined for UVTs ranging from 70 to 98 percent. In order to define the ASCF at any UVT within the validated range the average ASCF was modeled as a function of UVT as shown in Figure 1.20. This process is explained in Section 6.2.3. The coefficients for predicting the ASCF for *Cryptosporidium/*Giardia, adenovirus, and MS2 are provided in Table 1.13.

$$ASCF = A \times UVT^5 + B \times UVT^4 + C \times UVT^3 + D \times UVT^2 + E \times UVT + F \qquad \textbf{Equation 1.20}$$

Table 1.13 Coefficient Values for Predicting ASCF (Equation 1.20)

Coefficient	*Cryptosporidium/* Giardia	Adenovirus	MS2
A	-3.9384×10^{-8}	-3.2526×10^{-8}	-2.5855×10^{-8}
B	1.7789×10^{-5}	1.5011×10^{-5}	1.2579×10^{-5}
C	-3.1495×10^{-03}	-2.7035×10^{-03}	-2.3525×10^{-03}
D	2.7477×10^{-01}	2.3923×10^{-01}	2.1434×10^{-01}
E	$-1.1846 \times 10^{+01}$	$-1.0445 \times 10^{+01}$	$-9.5819 \times 10^{+00}$
F	$2.0327 \times 10^{+02}$	$1.8141 \times 10^{+02}$	$1.6989 \times 10^{+02}$

The ASCF values are applied during the calculation of the validation factor:

$$VF = B_{RED} \times U_{Val} \times ASCF \qquad \textbf{Equation 1.21}$$

1.4 VALIDATED UV DOSE FOR PATHOGEN CREDIT

Figures 1.10a, 1.10b, and 1.10c show the validated doses for *Cryptosporidium*, Giardia, and adenovirus, respectively, as a function of S/Q at UVTs of 70 to 98 percent for the WF-115-4 UV reactor. Figures 1.11 and 1.12 show similar validated doses for the WF-125-6 and WF-225-8 UV reactors, respectively.

Equation 1.22 and the coefficients in Table 1.14 define the minimum validated dose as a function of S/Q for *Cryptosporidium*, Giardia, and adenovirus. These equations can be used for UV dose monitoring for disinfection credit.

$$Validated\ Dose = a \times \left({}^{S}/_{Q}\right)^{b}$$ **Equation 1.22**

Table 1.14 Cryptosporidium, Giardia, and Adenovirus Coefficients for Equation 1.22

UV Reactor	*Cryptosporidium* Coefficients		Giardia Coefficients		Adenovirus Coefficients	
	a	**b**	**a**	**b**	**a**	**b**
WF-115-4	6.9873	0.97461	6.9587	0.97672	8.4427	0.94635
WF-125-6	37.222	0.97339	37.211	0.97597	45.247	0.91387
WF-225-8	40.791	0.96694	40.784	0.97009	50.728	0.89337

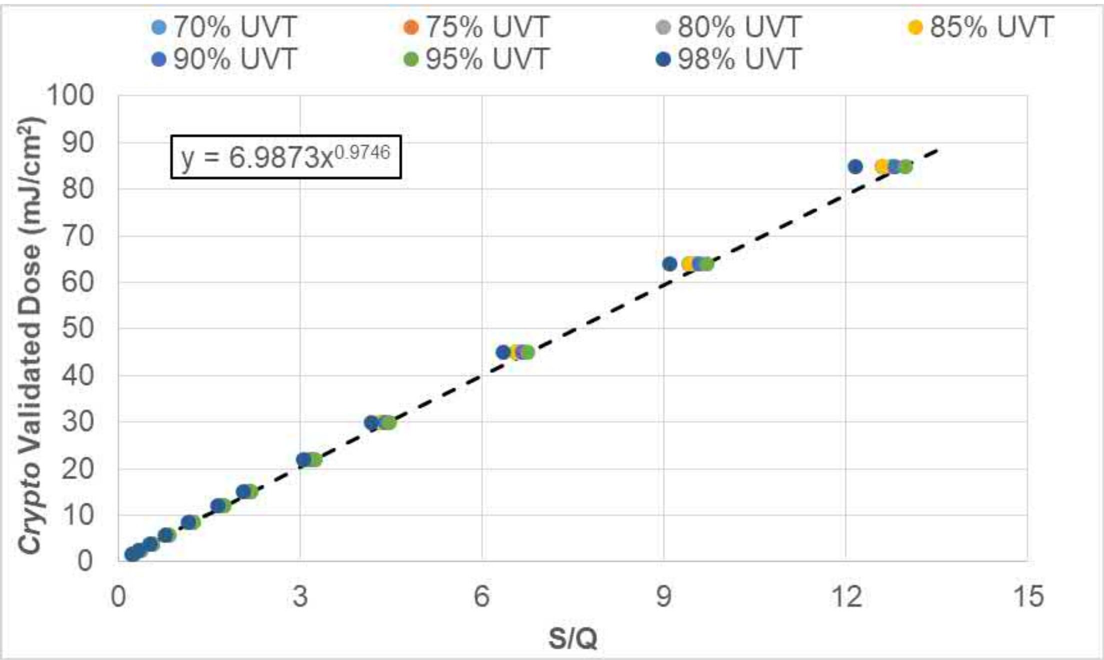

Figure 1.10a Cryptosporidium Validated Dose as a function of S/Q for the WF-115-4. *Dashed line shows minimum validated dose as a function of S/Q*.

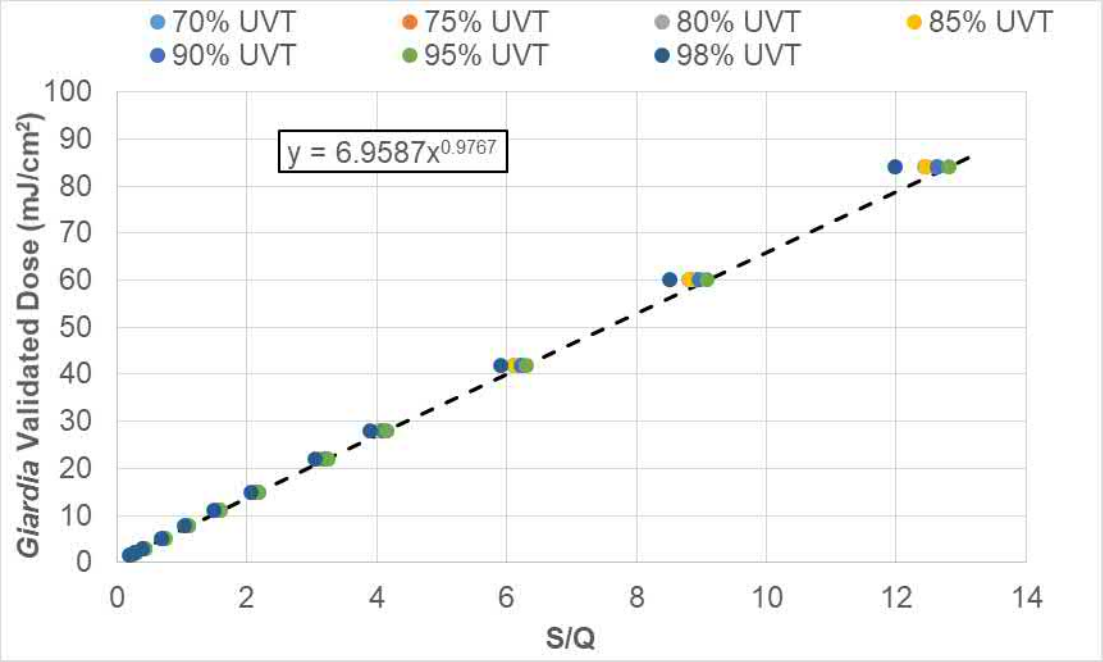

Figure 1.10b Giardia Validated Dose as a function of S/Q for the WF-115-4. *Dashed line shows minimum validated dose as a function of S/Q.*

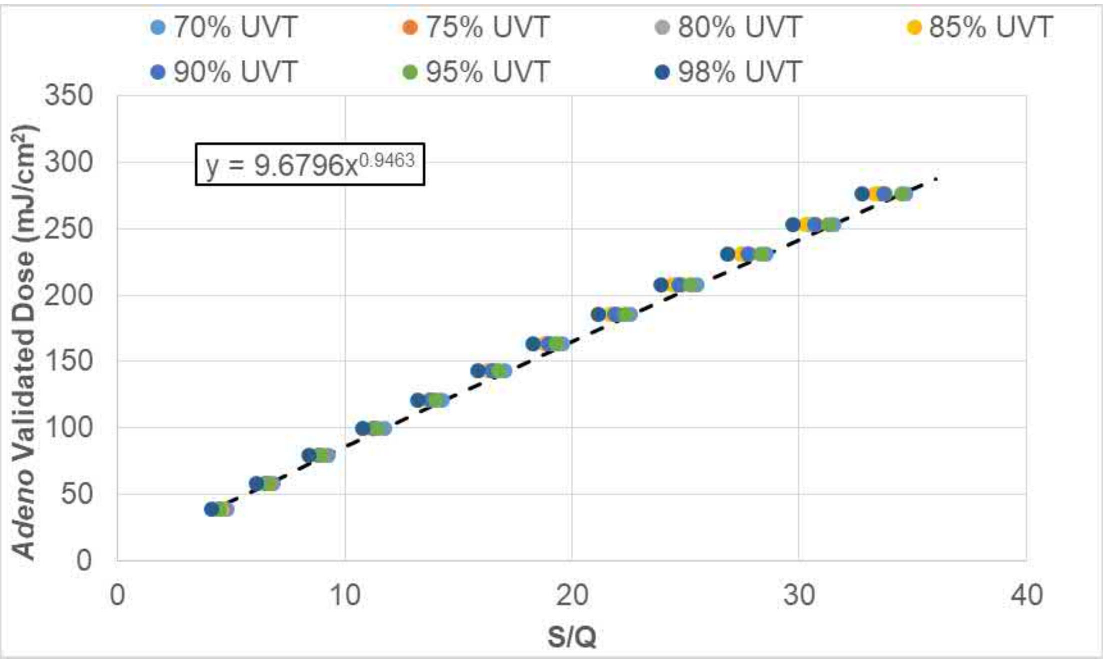

Figure 1.10c Adenovirus Validated Dose as a function of S/Q for the WF-115-4. *Dashed line shows minimum validated dose as a function of S/Q.*

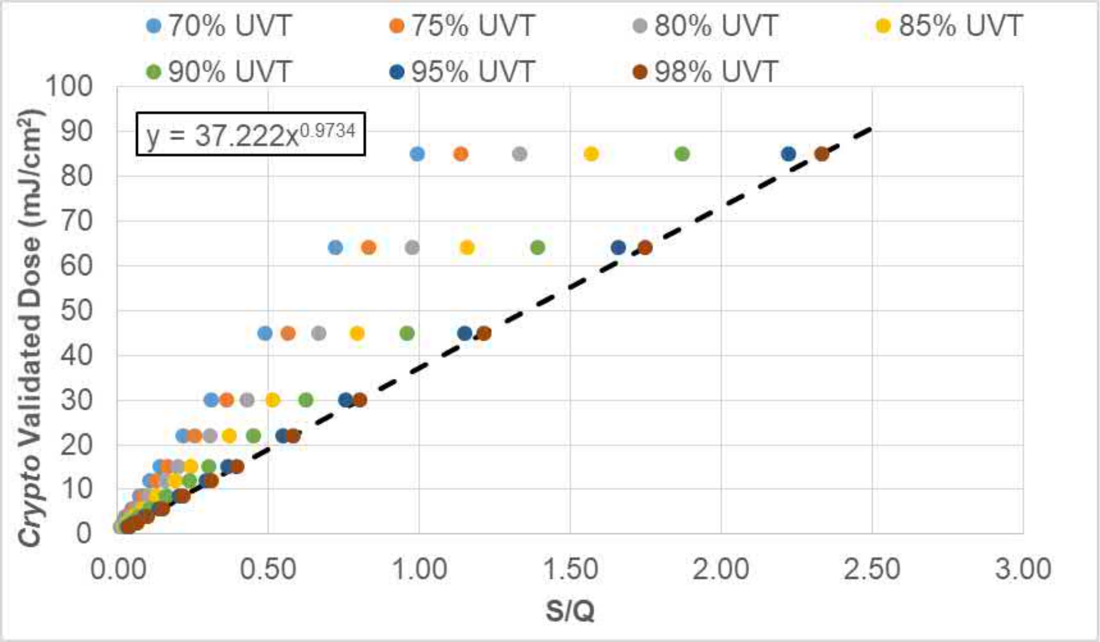

Figure 1.11a **Cryptosporidium Validated Dose as a function of S/Q for the WF-125-6.** ***Dashed line shows minimum validated dose as a function of S/Q*****.**

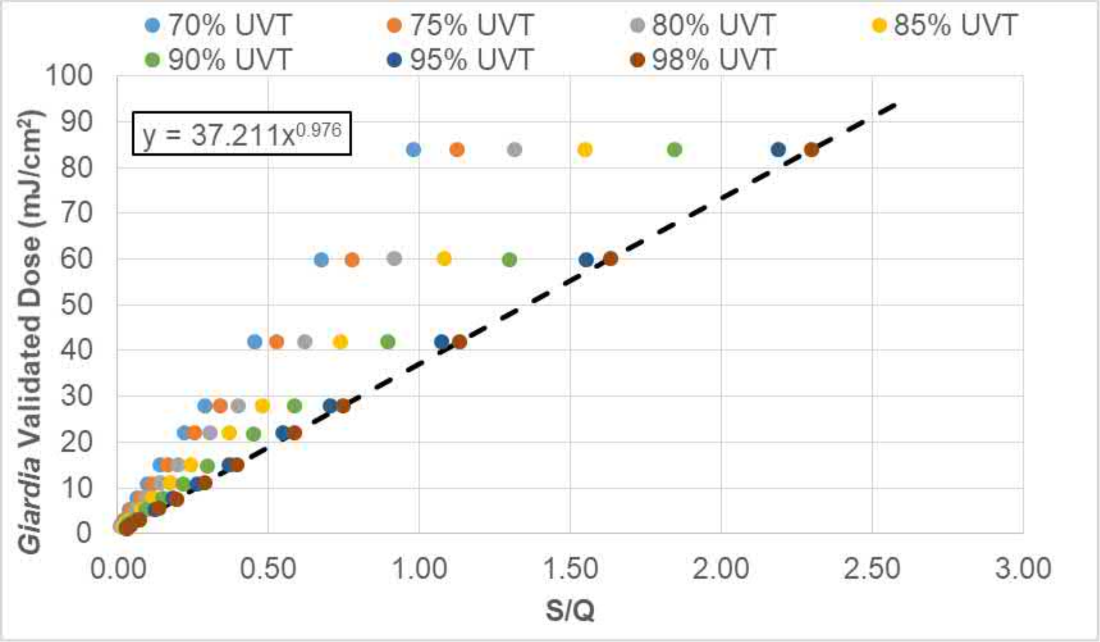

Figure 1.11b **Giardia Validated Dose as a function of S/Q for the WF-125-6.** ***Dashed line shows minimum validated dose as a function of S/Q.***

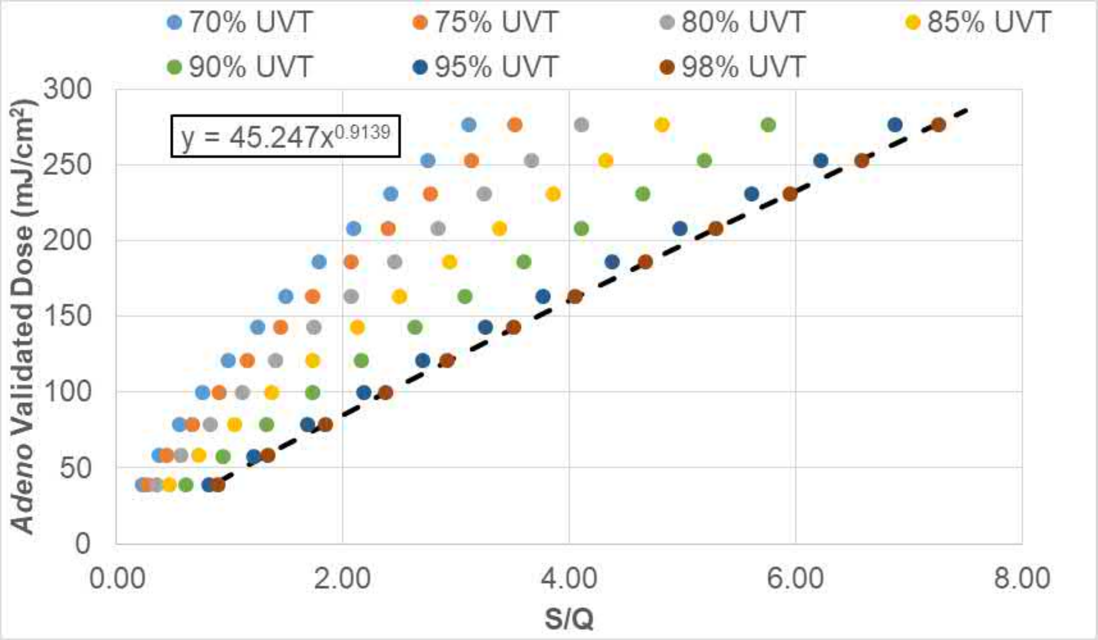

Figure 1.11c **Adenovirus Validated Dose as a function of S/Q for the WF-125-6.** ***Dashed line shows minimum validated dose as a function of S/Q.***

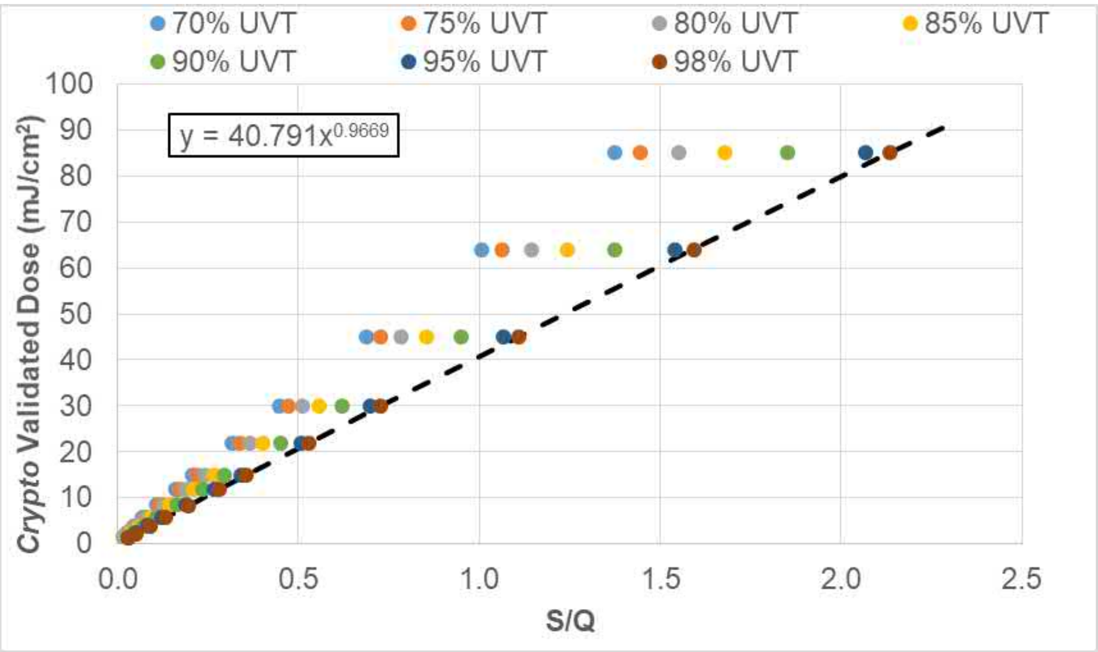

Figure 1.12a **Cryptosporidium Validated Dose as a function of S/Q for the WF-225-8.** ***Dashed line shows minimum validated dose as a function of S/Q.***

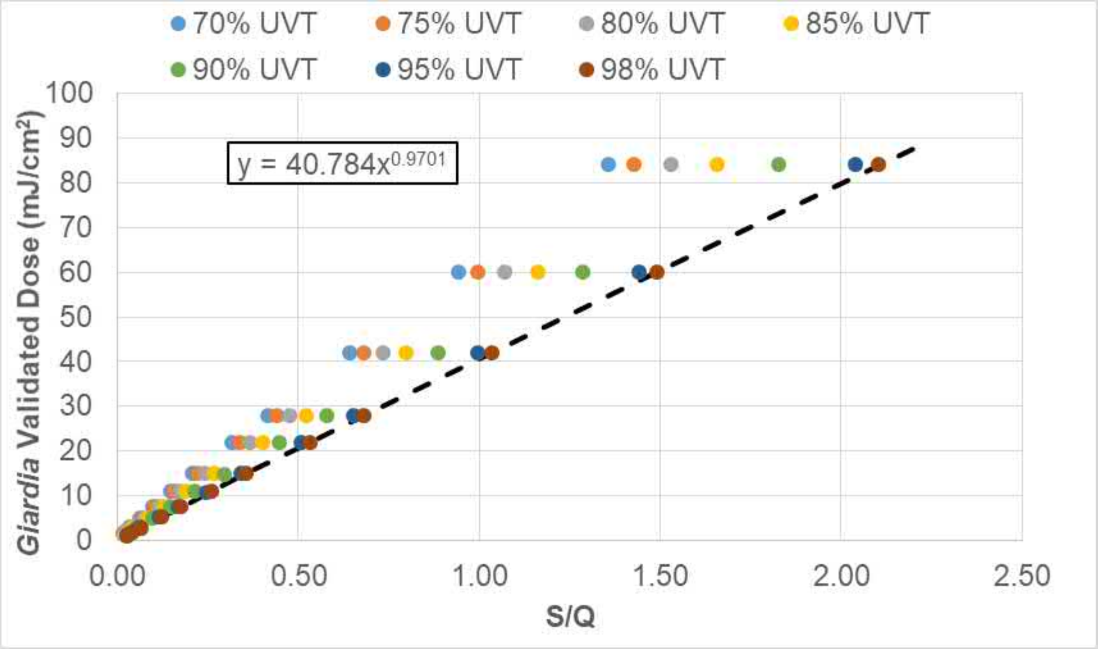

Figure 1.12b **Giardia Validated Dose as a function of S/Q for the WF-225-8.** ***Dashed line shows minimum validated dose as a function of S/Q.***

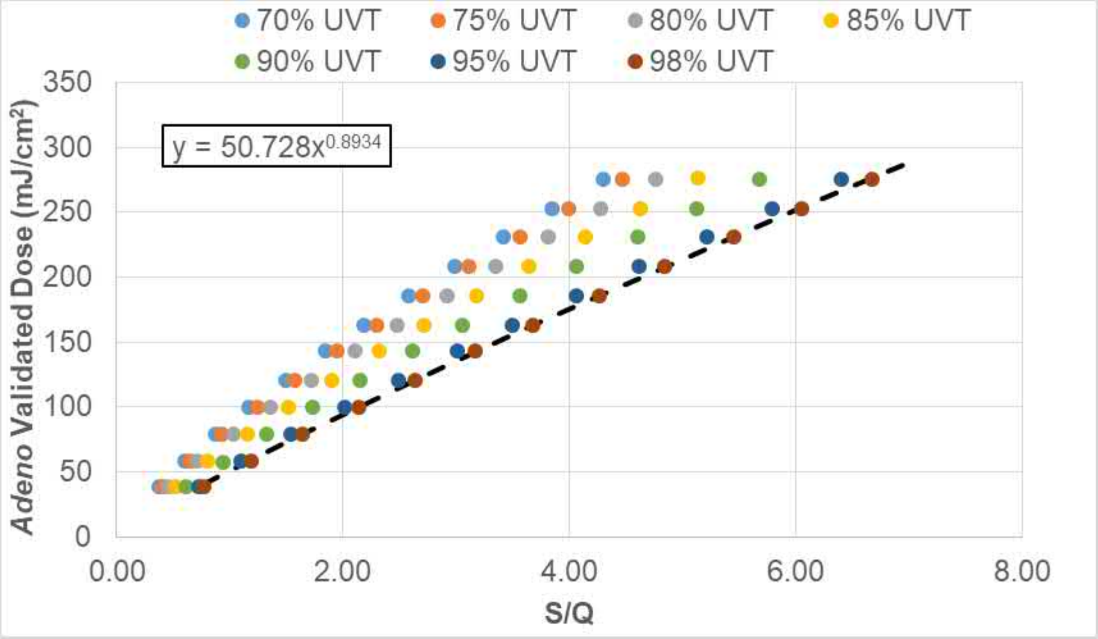

Figure 1.12c **Adenovirus Validated Dose as a function of S/Q for the WF-225-8.** ***Dashed line shows minimum validated dose as a function of S/Q.***

1.4.1 MS2 Equations that do not Use a UVT Monitor

Figures 1.13 through 1.15 show the doses for direct prediction of MS2, as a function of S/Q at UVTs of 70 to 98 percent for the WF-115-4, WF-125-6, and WF-225-8, respectively. The figures also show the relation and equation that defines the minimum validated dose as a function of S/Q. These can be used for UV dose monitoring for disinfection credit.

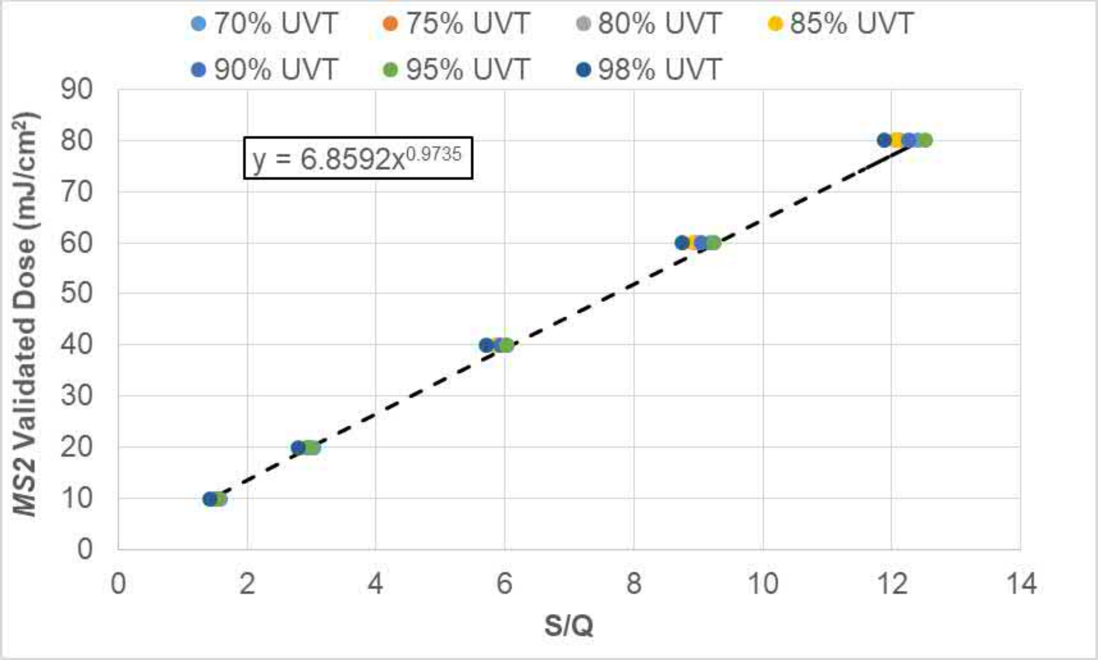

Figure 1.13 MS2 Dose as a function of S/Q for the WF-115-4. ***Dashed line shows minimum validated dose as a function of S/Q*****.**

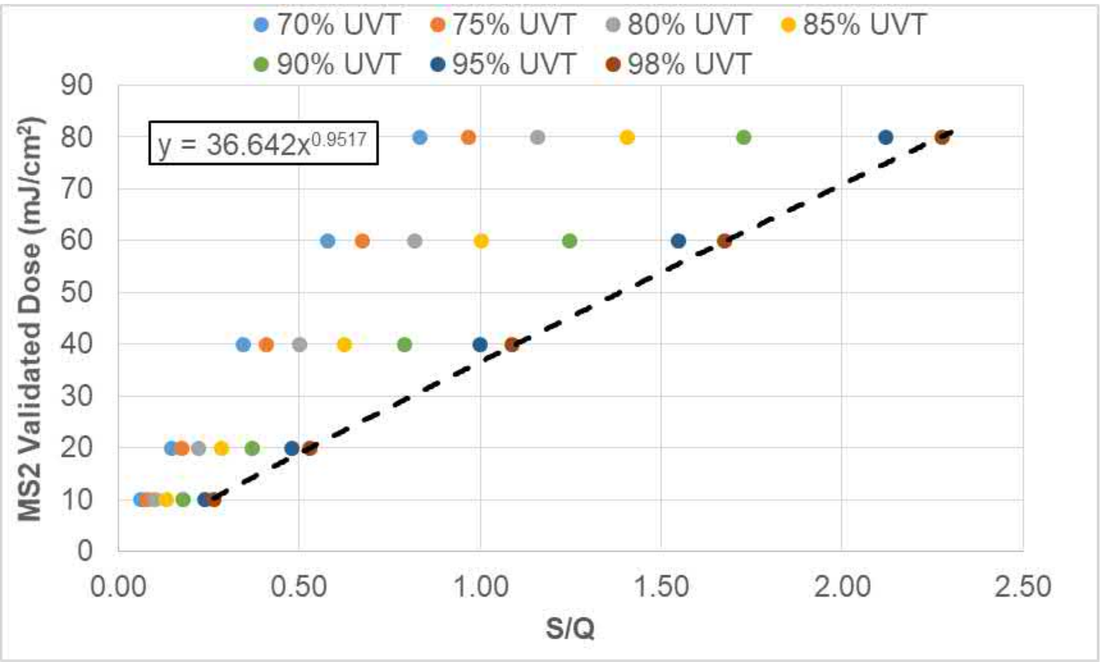

Figure 1.14 **MS2 Dose as a function of S/Q for the WF-125-6.** ***Dashed line shows minimum validated dose as a function of S/Q.***

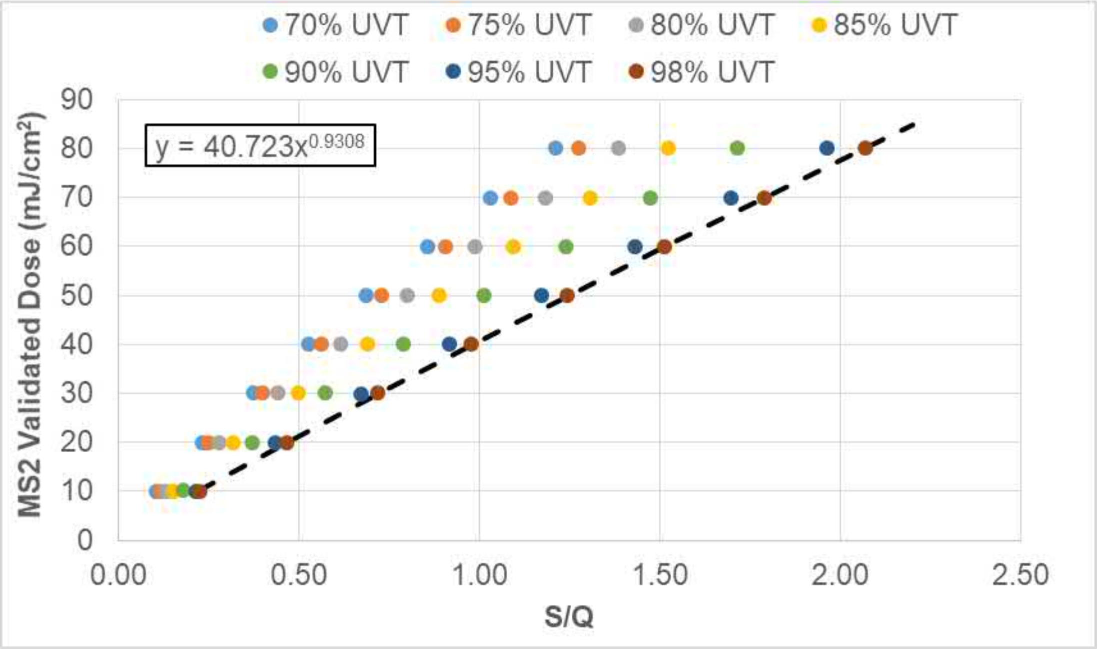

Figure 1.15 **MS2 Dose as a function of S/Q for the WF-225-8.** ***Dashed line shows minimum validated dose as a function of S/Q.***

1.4.2 Validated UV Dose for *Cryptosporidium*, Giardia, and Adenovirus Credit with a UVT monitor

Tables 1.15, 1.16, and 1.17 report the target *Cryptosporidium*, Giardia and adenovirus REDs required for *Cryptosporidium*, Giardia, and adenovirus credit, respectively, for the WF-115-4 UV reactor. Tables 1.18, 1.19, and 1.20 report the target *Cryptosporidium*, Giardia and adenovirus REDs required for *Cryptosporidium*, Giardia, and adenovirus credit, respectively, for the WF-125-6 UV reactor. Tables 1.21, 1.22, and 1.23 report the target *Cryptosporidium*, Giardia and adenovirus REDs required for *Cryptosporidium*, Giardia, and adenovirus credit, respectively, for the WF-225-8 UV reactor.

Table 1.15 Minimum *Crypto* RED (mJ/cm^2) Required for *Crypto* Log Inactivation Credits for the WF-115-4

UVT	Log Inactivation Credit of:											
	0.5	**1**	**1.5**	**2**	**2.5**	**3**	**3.5**	**4**	**4.5**	**5**	**5.5**	**6**
66	2.32	3.29	4.82	6.91	9.87	13.65	16.89	24.49	33.14	49.35	69.76	92.21
67	2.30	3.25	4.77	6.83	9.76	13.50	16.69	24.20	32.74	48.76	68.92	91.10
68	2.29	3.23	4.74	6.79	9.69	13.40	16.57	24.02	32.50	48.39	68.40	90.41
69	2.28	3.22	4.72	6.76	9.65	13.35	16.50	23.93	32.37	48.21	68.14	90.07
70	2.28	3.22	4.72	6.76	9.65	13.34	16.49	23.92	32.35	48.17	68.10	90.01
71	2.29	3.23	4.73	6.77	9.66	13.37	16.52	23.96	32.41	48.26	68.22	90.17
72	2.29	3.24	4.74	6.79	9.70	13.41	16.58	24.05	32.53	48.44	68.48	90.51
73	2.30	3.25	4.77	6.83	9.75	13.48	16.67	24.18	32.70	48.70	68.84	90.99
74	2.31	3.27	4.79	6.87	9.81	13.56	16.77	24.33	32.91	49.01	69.27	91.57
75	2.32	3.29	4.82	6.91	9.88	13.66	16.89	24.50	33.14	49.36	69.77	92.23
76	2.33	3.31	4.86	6.96	9.95	13.76	17.02	24.69	33.40	49.74	70.31	92.95
77	2.35	3.33	4.89	7.02	10.03	13.86	17.16	24.89	33.68	50.15	70.89	93.71
78	2.36	3.36	4.93	7.08	10.11	13.98	17.31	25.10	33.97	50.58	71.50	94.52
79	2.37	3.38	4.97	7.14	10.20	14.10	17.46	25.32	34.27	51.04	72.14	95.38
80	2.39	3.41	5.02	7.20	10.29	14.22	17.62	25.56	34.59	51.51	72.82	96.27
81	2.41	3.44	5.06	7.27	10.39	14.36	17.79	25.81	34.93	52.02	73.53	97.23
82	2.42	3.47	5.11	7.34	10.49	14.50	17.98	26.07	35.30	52.57	74.31	98.25
83	2.44	3.50	5.16	7.42	10.60	14.66	18.18	26.36	35.69	53.16	75.14	99.36
84	2.46	3.54	5.22	7.50	10.73	14.83	18.40	26.68	36.13	53.81	76.06	100.6
85	2.48	3.58	5.28	7.60	10.87	15.02	18.64	27.04	36.61	54.53	77.08	101.9
86	2.51	3.62	5.35	7.70	11.02	15.24	18.91	27.43	37.16	55.34	78.22	103.5
87	2.54	3.68	5.43	7.82	11.20	15.48	19.22	27.88	37.77	56.25	79.51	105.2
88	2.58	3.73	5.52	7.96	11.39	15.76	19.57	28.38	38.45	57.27	80.96	107.1
89	2.63	3.80	5.63	8.11	11.61	16.07	19.96	28.95	39.23	58.44	82.60	109.3
90	2.67	3.87	5.74	8.28	11.87	16.43	20.40	29.59	40.11	59.75	84.46	111.7
91	2.73	3.96	5.87	8.48	12.15	16.83	20.90	30.32	41.11	61.24	86.56	114.5
92	2.79	4.05	6.02	8.70	12.46	17.28	21.47	31.15	42.23	62.91	88.92	117.7
93	2.86	4.16	6.19	8.94	12.81	17.79	22.10	32.07	43.49	64.79	91.58	121.2
94	2.94	4.28	6.38	9.22	13.21	18.36	22.81	33.11	44.91	66.88	94.56	125.1
95	3.02	4.41	6.59	9.53	13.65	18.99	23.59	34.27	46.47	69.22	97.88	129.6
96	3.12	4.56	6.82	9.87	14.13	19.70	24.46	35.55	48.21	71.81	101.6	134.4
97	3.22	4.73	7.07	10.25	14.67	20.48	25.43	36.97	50.13	74.67	105.6	139.9
98	3.34	4.91	7.35	10.66	15.27	21.33	26.49	38.52	52.25	77.82	110.1	145.8

Table 1.16 Minimum Giardia RED (mJ/cm^2) Required for Giardia Log Inactivation Credits for the WF-115-4

UVT	Log Inactivation Credit of:											
	0.5	1	1.5	2	2.5	3	3.5	4	4.5	5	5.5	6
66	2.10	2.73	3.73	6.20	8.95	12.54	16.89	24.47	30.93	46.06	65.41	91.15
67	2.08	2.71	3.69	6.13	8.84	12.40	16.69	24.19	30.56	45.51	64.63	90.04
68	2.07	2.69	3.67	6.09	8.78	12.31	16.57	24.01	30.33	45.16	64.14	89.36
69	2.07	2.68	3.65	6.06	8.75	12.26	16.50	23.92	30.21	44.99	63.90	89.02
70	2.07	2.68	3.65	6.06	8.74	12.25	16.49	23.90	30.19	44.96	63.85	88.96
71	2.07	2.68	3.66	6.07	8.76	12.28	16.52	23.95	30.25	45.04	63.97	89.13
72	2.08	2.69	3.67	6.09	8.79	12.32	16.58	24.03	30.36	45.21	64.21	89.46
73	2.08	2.70	3.69	6.12	8.83	12.38	16.67	24.16	30.52	45.45	64.55	89.94
74	2.09	2.72	3.71	6.16	8.89	12.46	16.77	24.31	30.72	45.74	64.96	90.51
75	2.10	2.73	3.73	6.20	8.95	12.55	16.89	24.48	30.94	46.07	65.43	91.16
76	2.11	2.75	3.76	6.25	9.01	12.64	17.02	24.67	31.18	46.43	65.93	91.88
77	2.12	2.77	3.79	6.30	9.09	12.74	17.16	24.86	31.43	46.81	66.48	92.64
78	2.14	2.79	3.82	6.35	9.16	12.85	17.31	25.07	31.70	47.21	67.05	93.44
79	2.15	2.81	3.85	6.40	9.24	12.96	17.46	25.29	31.98	47.63	67.65	94.28
80	2.17	2.83	3.89	6.46	9.32	13.08	17.62	25.53	32.28	48.08	68.29	95.17
81	2.19	2.85	3.92	6.52	9.41	13.20	17.79	25.77	32.60	48.55	68.96	96.12
82	2.21	2.88	3.96	6.58	9.51	13.34	17.98	26.04	32.94	49.06	69.69	97.13
83	2.22	2.91	4.00	6.65	9.61	13.48	18.18	26.33	33.31	49.62	70.48	98.23
84	2.25	2.94	4.05	6.73	9.72	13.64	18.40	26.64	33.72	50.22	71.34	99.44
85	2.27	2.97	4.10	6.81	9.85	13.82	18.64	26.99	34.17	50.90	72.30	100.8
86	2.30	3.00	4.15	6.91	9.99	14.02	18.91	27.39	34.68	51.65	73.37	102.3
87	2.33	3.05	4.22	7.02	10.15	14.24	19.22	27.83	35.25	52.50	74.58	104.0
88	2.36	3.10	4.29	7.14	10.33	14.50	19.57	28.33	35.89	53.46	75.94	105.9
89	2.40	3.16	4.37	7.28	10.53	14.78	19.96	28.90	36.62	54.54	77.49	108.0
90	2.44	3.22	4.46	7.43	10.76	15.11	20.40	29.55	37.44	55.77	79.23	110.5
91	2.49	3.30	4.57	7.61	11.01	15.47	20.90	30.28	38.37	57.16	81.21	113.3
92	2.55	3.38	4.69	7.80	11.30	15.89	21.47	31.10	39.42	58.72	83.43	116.4
93	2.61	3.47	4.82	8.03	11.63	16.35	22.10	32.03	40.60	60.47	85.93	119.9
94	2.67	3.58	4.97	8.27	11.99	16.88	22.80	33.07	41.91	62.43	88.73	123.8
95	2.75	3.69	5.13	8.55	12.40	17.46	23.58	34.22	43.38	64.62	91.85	128.2
96	2.84	3.82	5.31	8.86	12.85	18.10	24.44	35.50	45.00	67.05	95.32	133.0
97	2.93	3.96	5.51	9.19	13.34	18.82	25.40	36.92	46.79	69.73	99.14	138.4
98	3.03	4.12	5.72	9.57	13.89	19.60	26.45	38.48	48.76	72.67	103.4	144.3

Table 1.17 Minimum Adenovirus RED (mJ/cm^2) Required for Adenovirus Log Inactivation Credits for the WF-115-4

UVT	Log Inactivation Credit of:											
	0.5	1	1.5	2	2.5	3	3.5	4	4.5	5	5.5	6
66	55.00	73.74	94.73	115.8	136.9	158.9	179.0	202.2	224.4	247.5	269.6	292.8
67	54.46	72.85	93.51	114.2	135.0	156.7	176.5	199.3	221.1	243.9	265.7	288.5
68	54.07	72.23	92.66	113.1	133.7	155.1	174.7	197.3	218.8	241.4	262.9	285.5
69	53.82	71.83	92.11	112.4	132.8	154.1	173.6	196.0	217.4	239.8	261.1	283.5
70	53.69	71.61	91.80	112.0	132.4	153.6	172.9	195.3	216.6	238.9	260.2	282.5
71	53.64	71.54	91.70	111.9	132.2	153.4	172.7	195.0	216.3	238.6	259.9	282.1
72	53.67	71.58	91.76	112.0	132.3	153.5	172.8	195.2	216.5	238.8	260.0	282.3
73	53.75	71.71	91.95	112.2	132.6	153.9	173.2	195.6	217.0	239.3	260.6	283.0
74	53.88	71.92	92.23	112.6	133.0	154.4	173.8	196.3	217.7	240.1	261.6	284.0
75	54.04	72.18	92.59	113.0	133.6	155.0	174.6	197.1	218.7	241.2	262.7	285.2
76	54.23	72.49	93.01	113.6	134.2	155.8	175.4	198.1	219.8	242.4	264.1	286.7
77	54.44	72.82	93.47	114.2	134.9	156.6	176.4	199.2	221.0	243.8	265.6	288.3
78	54.66	73.19	93.97	114.8	135.7	157.5	177.5	200.4	222.3	245.3	267.2	290.1
79	54.91	73.59	94.51	115.5	136.6	158.5	178.6	201.7	223.8	246.9	268.9	292.0
80	55.17	74.01	95.10	116.2	137.5	159.5	179.8	203.1	225.3	248.6	270.8	294.1
81	55.45	74.47	95.73	117.0	138.4	160.7	181.1	204.6	227.0	250.4	272.9	296.3
82	55.75	74.97	96.42	117.9	139.5	161.9	182.6	206.2	228.8	252.5	275.1	298.7
83	56.09	75.53	97.18	118.9	140.7	163.3	184.2	208.0	230.9	254.7	277.5	301.4
84	56.47	76.15	98.03	119.9	142.0	164.9	185.9	210.0	233.1	257.2	280.3	304.4
85	56.89	76.84	98.99	121.2	143.5	166.6	187.9	212.3	235.7	260.1	283.4	307.8
86	57.38	77.64	100.1	122.6	145.1	168.7	190.2	214.9	238.6	263.3	286.9	311.7
87	57.93	78.54	101.3	124.2	147.1	170.9	192.8	217.9	241.9	267.0	291.0	316.1
88	58.64	79.59	102.8	126.0	149.3	173.6	195.8	221.3	245.7	271.2	295.6	321.1
89	59.48	80.82	104.4	128.1	151.8	176.6	199.2	225.2	250.1	276.1	300.9	326.9
90	60.43	82.22	106.4	130.5	154.7	180.1	203.2	229.7	255.1	281.7	307.0	333.6
91	61.52	83.83	108.5	133.3	158.0	184.0	207.7	234.9	260.8	288.0	314.0	341.2
92	62.76	85.65	111.0	136.5	161.8	188.5	212.8	240.7	267.4	295.3	322.0	349.9
93	64.16	87.72	113.8	140.0	166.1	193.7	218.6	247.4	274.8	303.6	331.0	359.7
94	65.74	90.06	117.0	144.1	171.0	199.4	225.2	254.9	283.3	312.9	341.3	370.9
95	67.51	92.69	120.6	148.6	176.5	205.9	232.7	263.4	292.7	323.4	352.8	383.5
96	69.49	95.62	124.6	153.7	182.7	213.3	241.0	272.9	303.4	335.2	365.7	397.5
97	71.69	98.89	129.1	159.3	189.7	221.4	250.3	283.5	315.2	348.4	380.1	413.2
98	74.12	102.5	134.1	165.6	197.3	230.5	260.6	295.2	328.3	363.0	396.1	430.6

Table 1.18 Minimum *Crypto* RED (mJ/cm^2) Required for *Crypto* Log Inactivation Credits for the WF-125-6

UVT	Log Inactivation Credit of:											
	0.5	**1**	**1.5**	**2**	**2.5**	**3**	**3.5**	**4**	**4.5**	**5**	**5.5**	**6**
66	2.22	3.15	4.66	6.72	9.64	13.38	16.57	24.09	32.63	48.67	68.87	91.12
67	2.20	3.12	4.61	6.64	9.53	13.22	16.38	23.80	32.24	48.08	68.04	90.02
68	2.19	3.10	4.58	6.59	9.46	13.13	16.25	23.62	32.00	47.72	67.53	89.34
69	2.18	3.09	4.56	6.57	9.42	13.08	16.19	23.53	31.88	47.53	67.27	89.00
70	2.18	3.09	4.56	6.57	9.42	13.07	16.18	23.52	31.85	47.50	67.23	88.94
71	2.18	3.09	4.57	6.58	9.43	13.09	16.21	23.56	31.91	47.59	67.35	89.10
72	2.19	3.10	4.58	6.60	9.47	13.14	16.27	23.65	32.03	47.77	67.61	89.44
73	2.20	3.12	4.61	6.63	9.51	13.21	16.36	23.77	32.20	48.02	67.96	89.91
74	2.21	3.14	4.63	6.68	9.57	13.29	16.46	23.92	32.41	48.33	68.40	90.49
75	2.22	3.16	4.66	6.72	9.64	13.38	16.58	24.09	32.64	48.67	68.89	91.14
76	2.23	3.18	4.70	6.77	9.71	13.48	16.70	24.28	32.89	49.05	69.42	91.85
77	2.24	3.20	4.73	6.82	9.79	13.59	16.84	24.48	33.16	49.46	70.00	92.61
78	2.26	3.22	4.77	6.88	9.87	13.70	16.98	24.68	33.45	49.88	70.60	93.42
79	2.27	3.25	4.81	6.94	9.96	13.82	17.14	24.90	33.75	50.33	71.23	94.26
80	2.29	3.28	4.85	7.00	10.05	13.94	17.29	25.14	34.07	50.81	71.90	95.15
81	2.30	3.30	4.90	7.07	10.14	14.08	17.46	25.38	34.40	51.31	72.62	96.09
82	2.32	3.33	4.94	7.14	10.25	14.22	17.65	25.65	34.77	51.85	73.38	97.11
83	2.34	3.37	5.00	7.21	10.36	14.37	17.84	25.94	35.16	52.44	74.21	98.21
84	2.36	3.40	5.05	7.30	10.48	14.54	18.06	26.25	35.59	53.08	75.12	99.42
85	2.38	3.44	5.12	7.39	10.62	14.73	18.30	26.60	36.07	53.79	76.13	100.8
86	2.41	3.49	5.19	7.50	10.77	14.94	18.57	26.99	36.60	54.59	77.26	102.3
87	2.44	3.54	5.26	7.61	10.94	15.19	18.87	27.43	37.21	55.49	78.54	104.0
88	2.47	3.59	5.35	7.75	11.14	15.46	19.21	27.93	37.89	56.51	79.97	105.9
89	2.50	3.66	5.45	7.90	11.35	15.77	19.60	28.49	38.66	57.66	81.60	108.0
90	2.55	3.73	5.57	8.07	11.60	16.12	20.04	29.13	39.53	58.96	83.44	110.5
91	2.61	3.81	5.70	8.26	11.88	16.51	20.53	29.85	40.51	60.43	85.52	113.2
92	2.67	3.90	5.84	8.48	12.20	16.96	21.09	30.67	41.62	62.09	87.87	116.3
93	2.73	4.01	6.01	8.72	12.55	17.46	21.72	31.58	42.87	63.95	90.50	119.8
94	2.81	4.13	6.19	8.99	12.94	18.02	22.42	32.61	44.27	66.02	93.45	123.8
95	2.89	4.26	6.40	9.30	13.37	18.65	23.20	33.75	45.82	68.34	96.74	128.1
96	2.99	4.41	6.62	9.63	13.85	19.35	24.06	35.01	47.54	70.90	100.4	133.0
97	3.09	4.57	6.88	10.00	14.39	20.11	25.01	36.42	49.44	73.74	104.4	138.3
98	3.20	4.74	7.15	10.41	14.97	20.96	26.06	37.96	51.53	76.86	108.9	144.2

Table 1.19 Minimum Giardia RED (mJ/cm^2) Required for Giardia Log Inactivation Credits for the WF-125-6

UVT	Log Inactivation Credit of:											
	0.5	1	1.5	2	2.5	3	3.5	4	4.5	5	5.5	6
66	2.02	2.63	3.60	6.03	8.73	12.28	16.57	24.07	30.46	45.42	64.58	90.07
67	2.01	2.60	3.56	5.96	8.63	12.14	16.38	23.79	30.09	44.87	63.80	88.98
68	2.00	2.59	3.54	5.91	8.57	12.05	16.25	23.61	29.86	44.53	63.32	88.30
69	1.99	2.58	3.52	5.89	8.54	12.00	16.19	23.52	29.75	44.37	63.08	87.96
70	1.99	2.58	3.52	5.89	8.53	12.00	16.18	23.51	29.73	44.34	63.03	87.90
71	1.99	2.58	3.53	5.90	8.55	12.02	16.21	23.55	29.79	44.42	63.15	88.06
72	2.00	2.59	3.54	5.92	8.58	12.06	16.27	23.64	29.90	44.58	63.39	88.40
73	2.00	2.60	3.56	5.95	8.62	12.12	16.36	23.76	30.05	44.82	63.72	88.87
74	2.01	2.62	3.58	5.99	8.67	12.20	16.46	23.91	30.25	45.10	64.13	89.44
75	2.02	2.63	3.60	6.03	8.73	12.28	16.58	24.08	30.46	45.43	64.59	90.08
76	2.03	2.65	3.63	6.07	8.80	12.38	16.70	24.26	30.70	45.78	65.10	90.79
77	2.04	2.67	3.66	6.12	8.87	12.48	16.84	24.46	30.95	46.16	65.63	91.54
78	2.05	2.69	3.69	6.17	8.94	12.58	16.98	24.67	31.22	46.56	66.20	92.34
79	2.07	2.71	3.72	6.22	9.02	12.69	17.14	24.89	31.50	46.98	66.80	93.17
80	2.08	2.73	3.75	6.28	9.10	12.81	17.29	25.12	31.80	47.42	67.43	94.05
81	2.09	2.75	3.79	6.34	9.19	12.93	17.46	25.36	32.11	47.89	68.10	94.99
82	2.11	2.78	3.82	6.40	9.28	13.07	17.65	25.62	32.45	48.39	68.81	95.99
83	2.13	2.80	3.87	6.47	9.39	13.21	17.84	25.91	32.82	48.94	69.59	97.09
84	2.15	2.83	3.91	6.55	9.50	13.37	18.06	26.22	33.22	49.54	70.45	98.28
85	2.17	2.86	3.96	6.63	9.62	13.54	18.30	26.57	33.66	50.21	71.40	99.61
86	2.20	2.90	4.02	6.72	9.76	13.74	18.57	26.96	34.16	50.95	72.46	101.1
87	2.23	2.94	4.08	6.83	9.92	13.96	18.87	27.40	34.73	51.79	73.66	102.8
88	2.26	2.98	4.15	6.95	10.09	14.21	19.21	27.89	35.36	52.74	75.01	104.7
89	2.30	3.04	4.23	7.08	10.29	14.49	19.60	28.45	36.08	53.82	76.54	106.8
90	2.34	3.10	4.32	7.24	10.52	14.81	20.04	29.09	36.89	55.03	78.27	109.2
91	2.39	3.18	4.42	7.41	10.77	15.18	20.53	29.82	37.81	56.40	80.22	112.0
92	2.44	3.26	4.54	7.61	11.06	15.58	21.09	30.63	38.85	57.95	82.42	115.0
93	2.50	3.35	4.66	7.82	11.38	16.04	21.72	31.55	40.01	59.69	84.90	118.5
94	2.57	3.45	4.81	8.07	11.74	16.56	22.42	32.57	41.32	61.63	87.67	122.4
95	2.65	3.56	4.97	8.34	12.14	17.13	23.19	33.71	42.77	63.79	90.76	126.7
96	2.73	3.69	5.15	8.64	12.58	17.77	24.04	34.98	44.37	66.20	94.20	131.5
97	2.82	3.83	5.34	8.98	13.07	18.47	24.99	36.38	46.15	68.85	97.99	136.8
98	2.92	3.98	5.56	9.34	13.61	19.25	26.03	37.92	48.10	71.77	102.2	142.7

Table 1.20 Minimum Adenovirus RED (mJ/cm^2) Required for Adenovirus Log Inactivation Credits for the WF-125-6

UVT	Log Inactivation Credit of:											
	0.5	1	1.5	2	2.5	3	3.5	4	4.5	5	5.5	6
66	52.70	71.06	91.91	112.9	133.9	155.9	176.0	199.1	221.2	244.3	266.4	289.5
67	52.15	70.18	90.69	111.3	132.0	153.7	173.4	196.2	218.0	240.7	262.5	285.3
68	51.76	69.56	89.84	110.2	130.7	152.1	171.6	194.2	215.7	238.2	259.7	282.2
69	51.51	69.16	89.29	109.5	129.9	151.1	170.5	192.9	214.2	236.6	258.0	280.3
70	51.37	68.94	88.99	109.1	129.4	150.6	169.9	192.2	213.4	235.7	257.0	279.3
71	51.33	68.86	88.89	109.0	129.2	150.4	169.7	191.9	213.2	235.4	256.7	278.9
72	51.35	68.91	88.95	109.1	129.3	150.5	169.8	192.1	213.3	235.6	256.9	279.1
73	51.44	69.04	89.14	109.3	129.6	150.9	170.2	192.5	213.8	236.1	257.5	279.8
74	51.57	69.25	89.42	109.7	130.0	151.4	170.8	193.2	214.6	237.0	258.4	280.8
75	51.73	69.51	89.77	110.1	130.6	152.0	171.5	194.0	215.5	238.0	259.5	282.0
76	51.92	69.81	90.19	110.7	131.2	152.8	172.4	195.0	216.6	239.3	260.9	283.5
77	52.13	70.15	90.65	111.3	132.0	153.6	173.3	196.1	217.9	240.6	262.4	285.1
78	52.36	70.51	91.15	111.9	132.7	154.5	174.4	197.3	219.2	242.1	264.0	286.9
79	52.60	70.91	91.69	112.6	133.6	155.5	175.5	198.6	220.6	243.7	265.7	288.8
80	52.86	71.33	92.28	113.3	134.5	156.6	176.7	200.0	222.2	245.4	267.6	290.8
81	53.15	71.79	92.90	114.1	135.4	157.7	178.0	201.5	223.9	247.3	269.6	293.1
82	53.46	72.29	93.59	115.0	136.5	158.9	179.5	203.1	225.7	249.3	271.9	295.5
83	53.80	72.84	94.35	116.0	137.7	160.3	181.1	204.9	227.7	251.5	274.3	298.2
84	54.18	73.46	95.20	117.0	139.0	161.9	182.8	206.9	230.0	254.0	277.1	301.2
85	54.61	74.16	96.16	118.3	140.5	163.6	184.8	209.2	232.5	256.9	280.2	304.6
86	55.10	74.95	97.25	119.6	142.2	165.6	187.1	211.8	235.4	260.1	283.7	308.4
87	55.65	75.85	98.49	121.2	144.1	167.9	189.7	214.8	238.7	263.8	287.8	312.8
88	56.29	76.89	99.92	123.1	146.3	170.5	192.7	218.2	242.5	268.0	292.4	317.9
89	57.02	78.08	101.6	125.2	148.8	173.5	196.1	222.1	246.9	272.9	297.7	323.7
90	57.85	79.45	103.5	127.6	151.7	177.0	200.1	226.6	251.9	278.4	303.8	330.3
91	58.91	81.04	105.6	130.3	155.0	180.9	204.5	231.7	257.7	284.8	310.8	337.9
92	60.14	82.86	108.1	133.5	158.8	185.4	209.7	237.6	264.2	292.1	318.7	346.6
93	61.53	84.92	110.9	137.0	163.1	190.6	215.5	244.2	271.6	300.3	327.8	356.5
94	63.10	87.25	114.1	141.1	168.0	196.3	222.1	251.7	280.0	309.7	338.0	367.6
95	64.86	89.87	117.7	145.6	173.5	202.8	229.5	260.2	289.5	320.2	349.5	380.2
96	66.83	92.80	121.7	150.7	179.7	210.1	237.8	269.7	300.1	332.0	362.4	394.2
97	69.02	96.06	126.2	156.3	186.6	218.3	247.1	280.2	311.9	345.1	376.8	409.9
98	71.44	99.68	131.1	162.6	194.2	227.3	257.4	292.0	325.1	359.7	392.7	427.3

Table 1.21 Minimum *Crypto* RED (mJ/cm^2) Required for *Crypto* Log Inactivation Credits for the WF-225-8

UVT	Log Inactivation Credit of:											
	0.5	1	1.5	2	2.5	3	3.5	4	4.5	5	5.5	6
66	2.15	3.07	4.56	6.60	9.49	13.21	16.38	23.83	32.32	48.24	68.33	90.45
67	2.13	3.04	4.51	6.52	9.38	13.05	16.18	23.55	31.93	47.66	67.50	89.36
68	2.12	3.02	4.48	6.47	9.31	12.96	16.06	23.37	31.69	47.30	66.99	88.68
69	2.11	3.01	4.46	6.45	9.27	12.91	16.00	23.28	31.57	47.12	66.73	88.34
70	2.11	3.00	4.46	6.45	9.27	12.90	15.99	23.27	31.55	47.09	66.69	88.28
71	2.11	3.01	4.47	6.46	9.28	12.92	16.02	23.31	31.60	47.17	66.81	88.44
72	2.12	3.02	4.48	6.48	9.32	12.97	16.08	23.40	31.72	47.35	67.06	88.78
73	2.13	3.03	4.51	6.51	9.37	13.04	16.16	23.52	31.89	47.60	67.42	89.25
74	2.14	3.05	4.53	6.55	9.42	13.12	16.26	23.67	32.09	47.90	67.85	89.82
75	2.15	3.07	4.56	6.60	9.49	13.21	16.38	23.84	32.33	48.25	68.34	90.47
76	2.16	3.09	4.60	6.65	9.56	13.31	16.51	24.02	32.58	48.63	68.87	91.18
77	2.17	3.11	4.63	6.70	9.64	13.41	16.64	24.22	32.85	49.03	69.44	91.93
78	2.19	3.14	4.67	6.76	9.72	13.53	16.78	24.43	33.13	49.45	70.04	92.73
79	2.20	3.16	4.71	6.81	9.80	13.64	16.93	24.65	33.43	49.90	70.67	93.57
80	2.22	3.19	4.75	6.88	9.89	13.77	17.09	24.88	33.74	50.37	71.34	94.45
81	2.23	3.22	4.79	6.94	9.99	13.90	17.26	25.12	34.08	50.87	72.05	95.39
82	2.25	3.25	4.84	7.01	10.09	14.04	17.44	25.38	34.44	51.40	72.81	96.40
83	2.27	3.28	4.89	7.09	10.20	14.20	17.64	25.67	34.83	51.99	73.63	97.50
84	2.29	3.31	4.95	7.17	10.32	14.37	17.85	25.98	35.25	52.63	74.54	98.70
85	2.31	3.35	5.01	7.26	10.46	14.55	18.09	26.33	35.73	53.34	75.54	100.0
86	2.34	3.40	5.08	7.37	10.61	14.76	18.36	26.72	36.26	54.13	76.67	101.5
87	2.37	3.45	5.16	7.48	10.78	15.00	18.66	27.16	36.86	55.02	77.93	103.2
88	2.40	3.50	5.24	7.62	10.97	15.27	19.00	27.65	37.53	56.03	79.36	105.1
89	2.44	3.57	5.34	7.76	11.19	15.58	19.38	28.21	38.30	57.17	80.98	107.3
90	2.48	3.64	5.46	7.93	11.44	15.93	19.81	28.84	39.16	58.47	82.81	109.7
91	2.53	3.72	5.59	8.12	11.72	16.32	20.30	29.56	40.14	59.93	84.88	112.4
92	2.59	3.81	5.73	8.34	12.03	16.76	20.86	30.37	41.24	61.57	87.21	115.5
93	2.65	3.91	5.89	8.58	12.38	17.26	21.48	31.27	42.48	63.43	89.83	119.0
94	2.73	4.03	6.07	8.85	12.77	17.82	22.18	32.29	43.87	65.49	92.76	122.9
95	2.81	4.16	6.28	9.15	13.20	18.44	22.95	33.42	45.41	67.79	96.04	127.3
96	2.90	4.31	6.50	9.48	13.68	19.13	23.80	34.68	47.12	70.34	99.67	132.1
97	3.00	4.47	6.75	9.85	14.21	19.89	24.75	36.07	49.01	73.17	103.7	137.4
98	3.12	4.64	7.03	10.26	14.79	20.73	25.79	37.60	51.09	76.27	108.1	143.3

Table 1.22 Minimum Giardia RED (mJ/cm^2) Required for Giardia Log Inactivation Credits for the WF-225-8

UVT	Log Inactivation Credit of:											
	0.5	1	1.5	2	2.5	3	3.5	4	4.5	5	5.5	6
66	1.97	2.56	3.52	5.92	8.60	12.12	16.38	23.82	30.16	45.02	64.06	89.40
67	1.95	2.54	3.48	5.85	8.50	11.98	16.18	23.54	29.80	44.48	63.29	88.31
68	1.94	2.52	3.46	5.80	8.43	11.89	16.06	23.36	29.57	44.14	62.81	87.64
69	1.94	2.51	3.44	5.78	8.40	11.84	16.00	23.28	29.46	43.98	62.57	87.31
70	1.94	2.51	3.44	5.78	8.40	11.84	15.99	23.26	29.44	43.95	62.53	87.25
71	1.94	2.51	3.45	5.79	8.41	11.86	16.02	23.30	29.50	44.03	62.64	87.41
72	1.94	2.52	3.46	5.81	8.44	11.90	16.08	23.39	29.61	44.19	62.88	87.74
73	1.95	2.53	3.48	5.84	8.49	11.96	16.16	23.51	29.76	44.43	63.21	88.20
74	1.96	2.55	3.50	5.88	8.54	12.04	16.26	23.66	29.95	44.71	63.62	88.77
75	1.97	2.56	3.52	5.92	8.60	12.12	16.38	23.83	30.17	45.03	64.07	89.41
76	1.98	2.58	3.55	5.96	8.66	12.21	16.51	24.01	30.41	45.38	64.58	90.12
77	1.99	2.60	3.57	6.01	8.73	12.31	16.64	24.21	30.66	45.76	65.11	90.86
78	2.00	2.62	3.60	6.06	8.81	12.42	16.78	24.41	30.92	46.16	65.67	91.65
79	2.01	2.64	3.64	6.11	8.88	12.53	16.93	24.63	31.20	46.57	66.27	92.48
80	2.03	2.66	3.67	6.17	8.96	12.64	17.09	24.86	31.49	47.01	66.89	93.36
81	2.04	2.68	3.70	6.22	9.05	12.76	17.26	25.10	31.81	47.48	67.56	94.29
82	2.05	2.71	3.74	6.29	9.14	12.90	17.44	25.36	32.14	47.98	68.27	95.29
83	2.07	2.73	3.78	6.36	9.24	13.04	17.64	25.65	32.51	48.52	69.05	96.37
84	2.09	2.76	3.82	6.43	9.36	13.20	17.85	25.96	32.90	49.12	69.90	97.57
85	2.11	2.79	3.87	6.51	9.48	13.37	18.09	26.31	33.35	49.78	70.84	98.89
86	2.13	2.83	3.93	6.61	9.62	13.57	18.36	26.69	33.84	50.52	71.90	100.4
87	2.16	2.87	3.99	6.71	9.77	13.78	18.66	27.13	34.40	51.36	73.09	102.0
88	2.20	2.92	4.06	6.83	9.94	14.03	19.00	27.62	35.03	52.30	74.43	103.9
89	2.23	2.97	4.14	6.96	10.14	14.31	19.38	28.18	35.75	53.36	75.95	106.0
90	2.28	3.03	4.23	7.12	10.37	14.63	19.81	28.81	36.55	54.57	77.67	108.4
91	2.32	3.10	4.33	7.29	10.62	14.99	20.30	29.53	37.47	55.93	79.61	111.2
92	2.38	3.18	4.44	7.48	10.90	15.40	20.86	30.34	38.49	57.47	81.80	114.2
93	2.44	3.27	4.57	7.70	11.22	15.85	21.48	31.24	39.65	59.20	84.26	117.7
94	2.51	3.37	4.71	7.94	11.58	16.36	22.17	32.26	40.94	61.13	87.02	121.5
95	2.58	3.48	4.87	8.21	11.97	16.93	22.94	33.39	42.39	63.28	90.09	125.8
96	2.66	3.60	5.05	8.51	12.42	17.56	23.79	34.65	43.98	65.67	93.50	130.6
97	2.76	3.74	5.24	8.84	12.90	18.26	24.73	36.04	45.74	68.31	97.27	135.9
98	2.86	3.89	5.45	9.20	13.44	19.03	25.77	37.57	47.68	71.21	101.4	141.7

Table 1.23 **Minimum Adenovirus RED (mJ/cm²) Required for Adenovirus Log Inactivation Credits for the WF-225-8**

UVT	Log Inactivation Credit of:											
	0.5	1	1.5	2	2.5	3	3.5	4	4.5	5	5.5	6
66	51.10	69.29	90.07	111.0	132.0	154.0	174.0	197.1	219.2	242.3	264.4	287.5
67	50.55	68.40	88.85	109.4	130.1	151.8	171.5	194.2	216.0	238.7	260.5	283.2
68	50.16	67.78	88.00	108.4	128.8	150.2	169.7	192.2	213.7	236.2	257.7	280.2
69	49.91	67.38	87.45	107.7	127.9	149.2	168.6	190.9	212.3	234.6	255.9	278.3
70	49.77	67.16	87.15	107.3	127.5	148.7	167.9	190.2	211.5	233.7	255.0	277.2
71	49.72	67.09	87.05	107.1	127.3	148.5	167.7	190.0	211.2	233.4	254.7	276.9
72	49.75	67.14	87.11	107.2	127.4	148.6	167.8	190.1	211.4	233.6	254.8	277.1
73	49.84	67.27	87.30	107.5	127.7	149.0	168.2	190.5	211.8	234.1	255.4	277.7
74	49.96	67.48	87.58	107.8	128.1	149.5	168.8	191.2	212.6	235.0	256.4	278.7
75	50.13	67.74	87.94	108.3	128.7	150.1	169.6	192.1	213.5	236.0	257.5	280.0
76	50.32	68.04	88.35	108.8	129.3	150.9	170.4	193.0	214.6	237.3	258.8	281.5
77	50.53	68.37	88.81	109.4	130.0	151.7	171.4	194.1	215.9	238.6	260.3	283.1
78	50.76	68.74	89.31	110.0	130.8	152.6	172.4	195.3	217.2	240.1	262.0	284.9
79	51.00	69.13	89.85	110.7	131.7	153.6	173.6	196.6	218.6	241.7	263.7	286.8
80	51.27	69.56	90.44	111.4	132.5	154.6	174.8	198.0	220.2	243.4	265.6	288.8
81	51.55	70.01	91.06	112.2	133.5	155.8	176.1	199.5	221.9	245.3	267.6	291.0
82	51.87	70.51	91.75	113.1	134.6	157.0	177.5	201.1	223.7	247.3	269.9	293.5
83	52.21	71.07	92.51	114.1	135.8	158.4	179.1	202.9	225.7	249.5	272.3	296.1
84	52.60	71.68	93.36	115.2	137.1	159.9	180.9	204.9	228.0	252.0	275.1	299.1
85	53.03	72.38	94.32	116.4	138.5	161.7	182.9	207.2	230.5	254.9	278.2	302.5
86	53.52	73.17	95.40	117.8	140.2	163.7	185.2	209.8	233.4	258.1	281.7	306.4
87	54.08	74.08	96.65	119.3	142.2	166.0	187.8	212.8	236.7	261.8	285.7	310.8
88	54.73	75.11	98.08	121.2	144.4	168.6	190.7	216.2	240.5	266.0	290.4	315.8
89	55.46	76.30	99.71	123.3	146.9	171.6	194.2	220.1	244.9	270.9	295.7	321.6
90	56.30	77.66	101.6	125.7	149.8	175.0	198.1	224.6	249.9	276.4	301.8	328.3
91	57.26	79.22	103.8	128.4	153.1	179.0	202.6	229.7	255.6	282.8	308.7	335.9
92	58.39	81.03	106.2	131.6	156.9	183.5	207.7	235.6	262.2	290.0	316.7	344.5
93	59.78	83.09	109.0	135.1	161.1	188.6	213.5	242.2	269.6	298.3	325.7	354.4
94	61.34	85.42	112.2	139.1	166.0	194.4	220.1	249.7	278.0	307.6	335.9	365.5
95	63.10	88.03	115.8	143.7	171.5	200.9	227.5	258.2	287.5	318.1	347.4	378.1
96	65.06	90.96	119.8	148.7	177.7	208.1	235.8	267.6	298.1	329.9	360.3	392.1
97	67.24	94.22	124.3	154.4	184.6	216.3	245.1	278.2	309.9	343.0	374.7	407.8
98	69.66	97.83	129.2	160.6	192.2	225.3	255.4	289.9	323.0	357.6	390.7	425.2

1.5 UVDGM COMPLIANCE

Validation testing, analysis, and reporting were conducted in accordance with the 2006 UVDGM. Chapter 7 of this report evaluates compliance of the validation to the five checklists provided in Chapter 5 of the UVDGM. The validation of the reactor meets the 2006 UVDGM with the following clarifications:

1. The Student's t-statistics tabulated in the UVDGM are incorrect because they use N degrees of freedom. The degree of freedom is defined as the number of samples minus the number of coefficients predicted in the model (*Applied Linear Regression*, 3rd Ed.). All t-statistics used in this validation were obtained using N-P degrees of freedom, where P is the number of parameters or coefficients in the model obtained from a regression analysis. For example, when dose response curves are fit using a quadratic equation, the model uses two parameters and thus N-2 degrees of freedom was used.
2. Validation equations predict log inactivation as a function of flow, UVT, UV sensor readings, and microbe UV sensitivity. Validation equations were fitted to validation data measured using MS2 and T1UV phage. Fits were obtained using a non-linear multivariate regression that minimized the sum of squares of the differences between the measured and predicted log inactivation instead of measured and predicted RED. Therefore, the uncertainty of validation was defined in units of log inactivation instead of RED.
3. The UVDGM recommends calculating the log inactivation with the UV dose-response curve as $\log(N/N_0)$ where $\log(N_0)$ is defined as the y-axis intercept of the fit to log(N) versus UV dose. Analysis showed that the value of $\log(N_0)$ obtained using this approach was biased low with most of the measured UV dose-response curves (Table A.4c in Appendix A). The bias would lead to over prediction of log inactivation by the biodosimetry analysis. Hence, $\log(N_0)$ was defined as the average of the measured value of log(N) with zero UV dose.

UV REACTOR DOCUMENTATION

The UV disinfection systems validated and herein described are the WF-115-4, WF-125-6, and WF-225-8 UV reactors manufactured by ATG UV Technology (ATG). The WF-115-4 system uses one 1.5 kW medium-pressure (MP) lamp oriented perpendicular to the bulk flow. The WF-125-6 system uses one 2.5 kW MP lamp oriented perpendicular to the bulk flow. The WF-225-8 system uses two 2.5 kW MP lamps oriented perpendicular to the bulk flow. In each reactor, a single quartz sleeve is installed over each lamp. Each quartz sleeve was equipped with a mechanical wiper mechanism to remove foulants that accumulate on the external surfaces of the sleeves. Each reactor was equipped with a single UV intensity sensor that monitored the output of the lamp. Each reactor used a control panel and external magnetic ballast to control the operation of the system and monitor performance. Unless otherwise noted, ATG provided all the information reported in this section.

2.1 REACTOR

The WF-115-4, WF-125-6, and WF-225-8 UV reactors are inline, rectangular shaped reactors comprised of a stainless steel vessel. The total length (parallel to flow) is 160 mm for the WF-115-4 and 180 mm for the WF-125-6 and WF-225-8. Figure 2.1 shows an isometric view of the reactors, Figure 2.2 shows the cross-sectional view, Figure 2.3 shows the top view, and Figure 2.4 shows the end view. The three reactors were connected to the test train piping in parallel, each connected via a bolted flange to the test train piping. Each reactor uses a single UV intensity sensor with a sensor port located on the top of the reactor vessel.

Water enter and exits the WF-115-4, WF-125-6, and WF-225-8 UV reactors though flanges with internal diameters of 108.2 mm, 161.5 mm, and 211.6 mm, respectively. The sensor port is located approximately 75 mm upstream of the outlet flange face for the WF-115-4 UV reactor and 90 mm upstream of the outlet flange face for the WF-125-6 and WF-225-8 UV reactors. The lamps are centered radially in the quartz sleeves.

All three reactors include a wiping system to clean the outer surfaces of their quartz sleeve(s). The two major components of the wiping system are the wiper shaft and wiper carriages, shown in Figures 2.5 and 2.6. Each reactor features two wiper carriages at a fixed spacing on a single wiper shaft.

All dimensions in Figures 2.1 through 2.6 are in mm unless otherwise noted. Tables 2.1, 2.2, and 2.3 summarizes key wetted dimensions of the WF-115-4, WF-125-6, and WF-225-8 UV reactors, respectively.

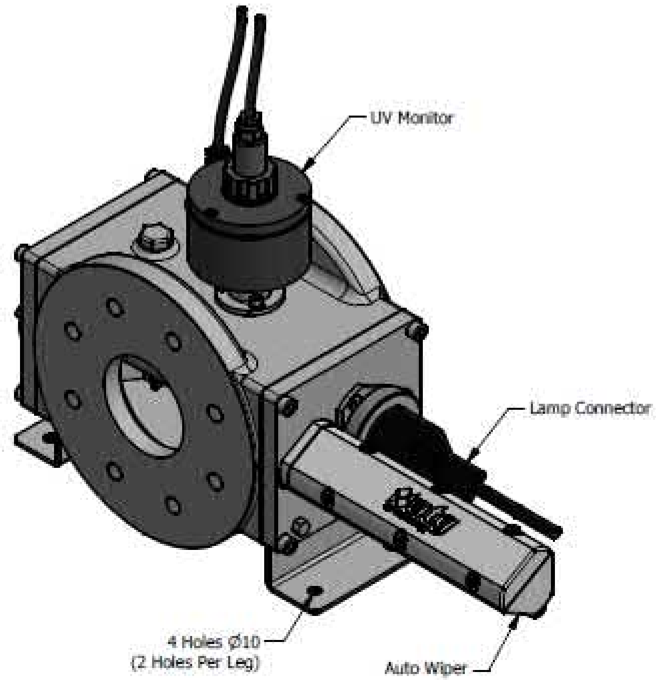

Figure 2.1a ATG WF-115-4 Reactor, isometric view. (Source: ATG)

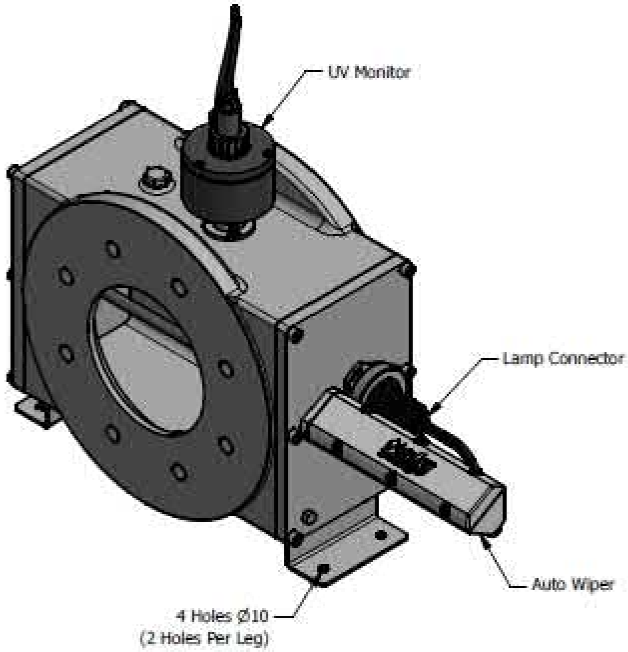

Figure 2.1b ATG WF-125-6 Reactor, isometric view. (Source: ATG)

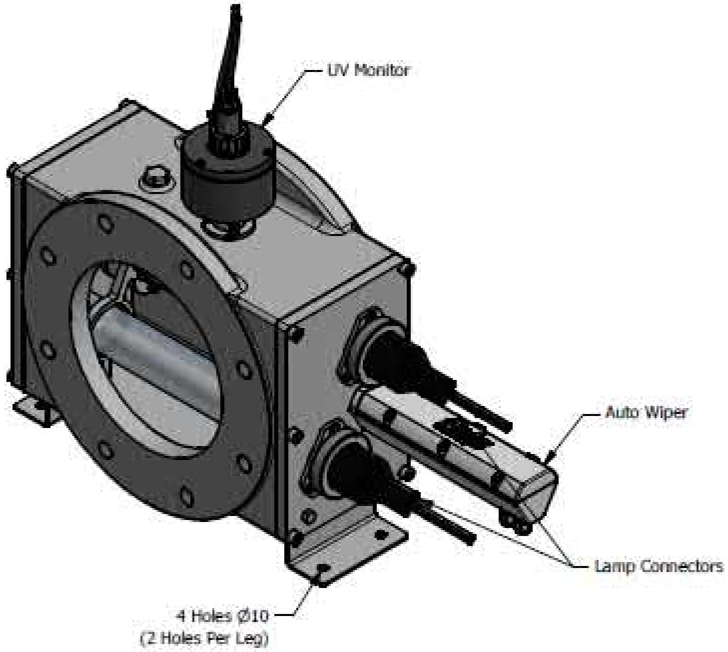

Figure 2.1c ATG WF-225-8 Reactor, isometric view. (Source: ATG)

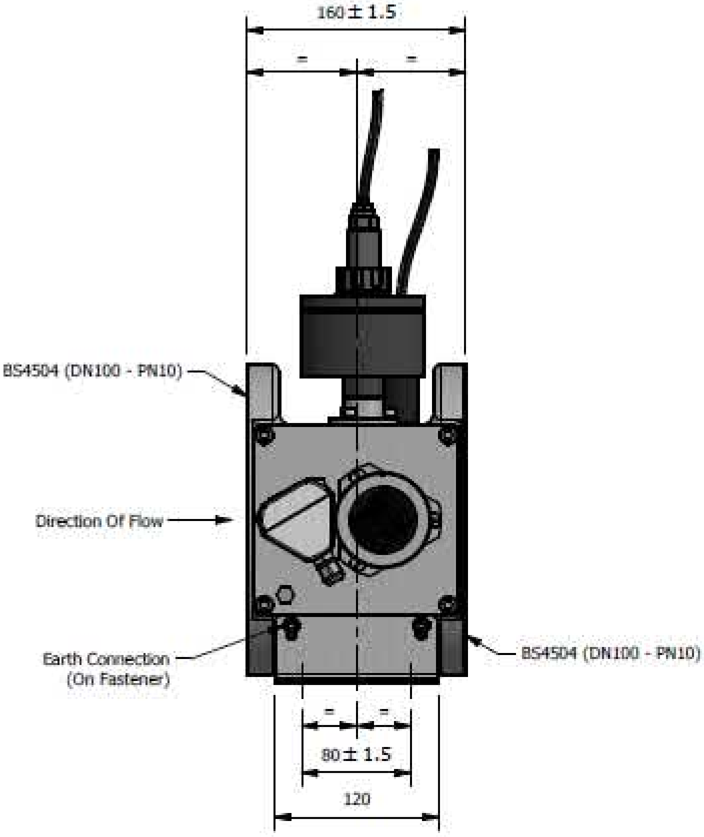

Figure 2.2a ATG WF-115-4 Reactor, cross-sectional view. (Source: ATG)

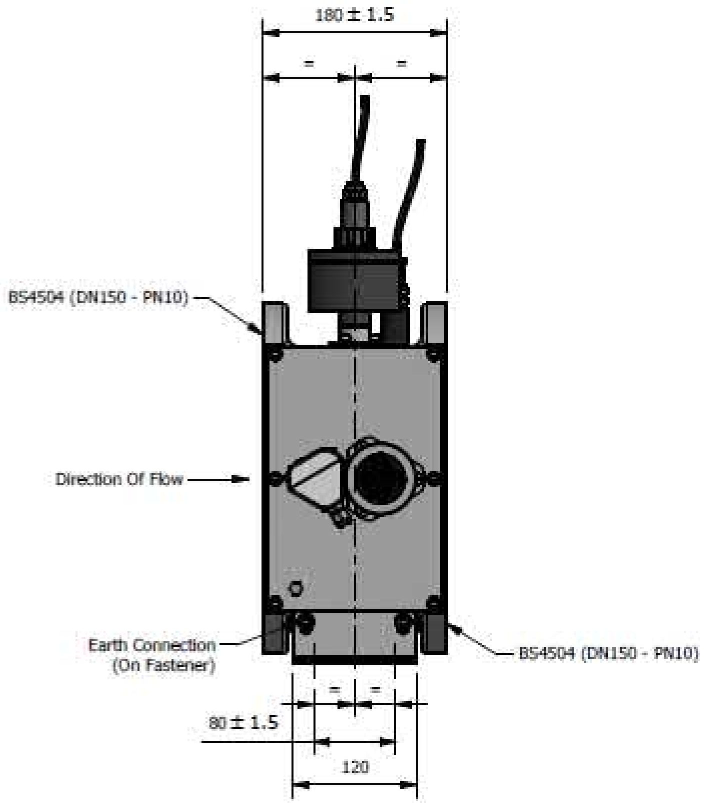

Figure 2.2b **ATG WF-125-6 Reactor, cross-sectional view. (Source: ATG)**

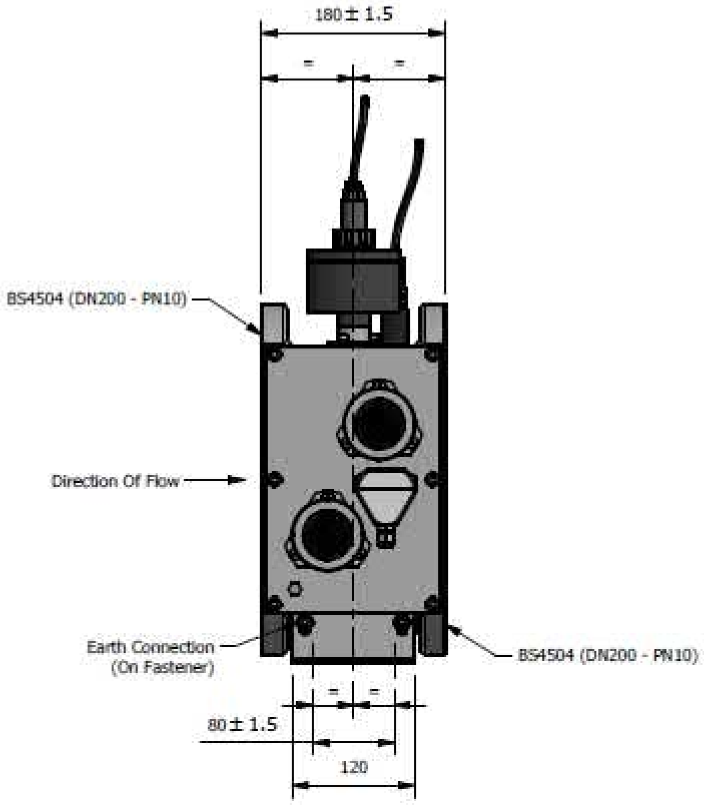

Figure 2.2c **ATG WF-225-8 Reactor, cross-sectional view. (Source: ATG)**

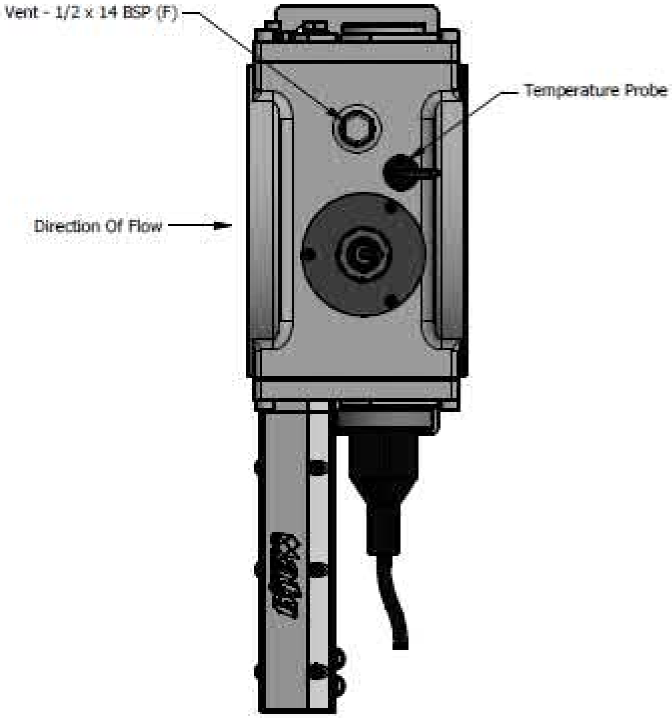

Figure 2.3a ATG WF-115-4 Reactor, top view. (Source: ATG)

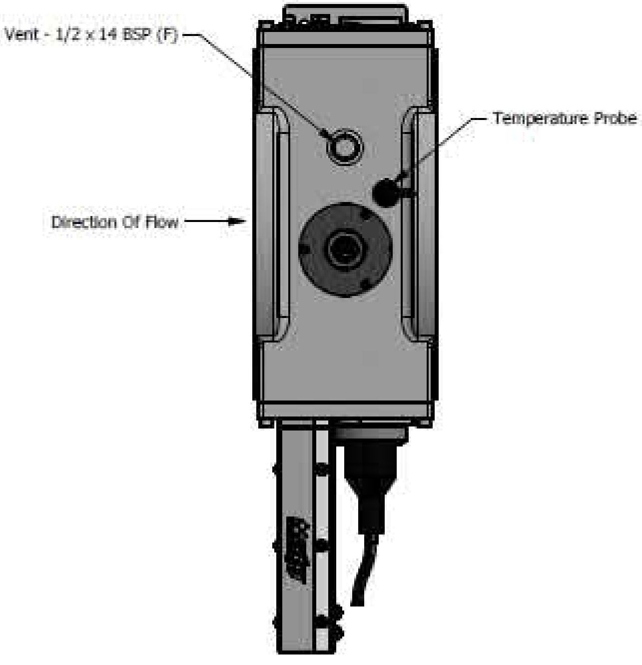

Figure 2.3b ATG WF-125-6 Reactor, top view. (Source: ATG)

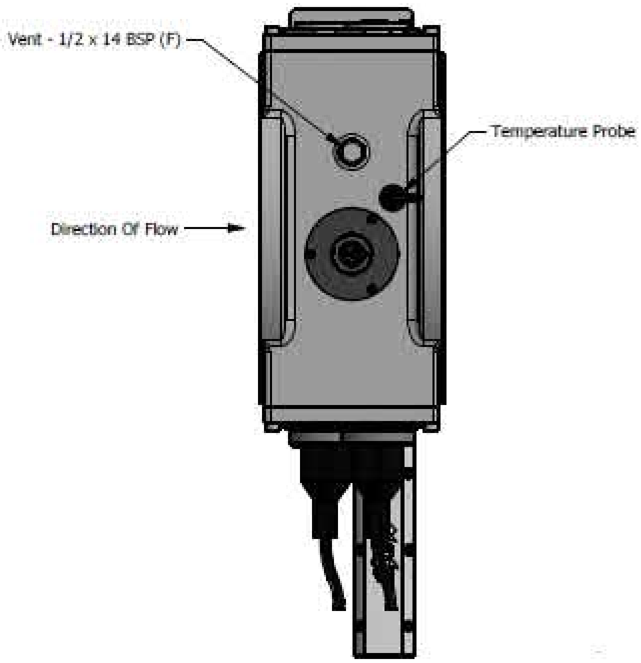

Figure 2.3c ATG WF-225-8 Reactor, top view. (Source: ATG)

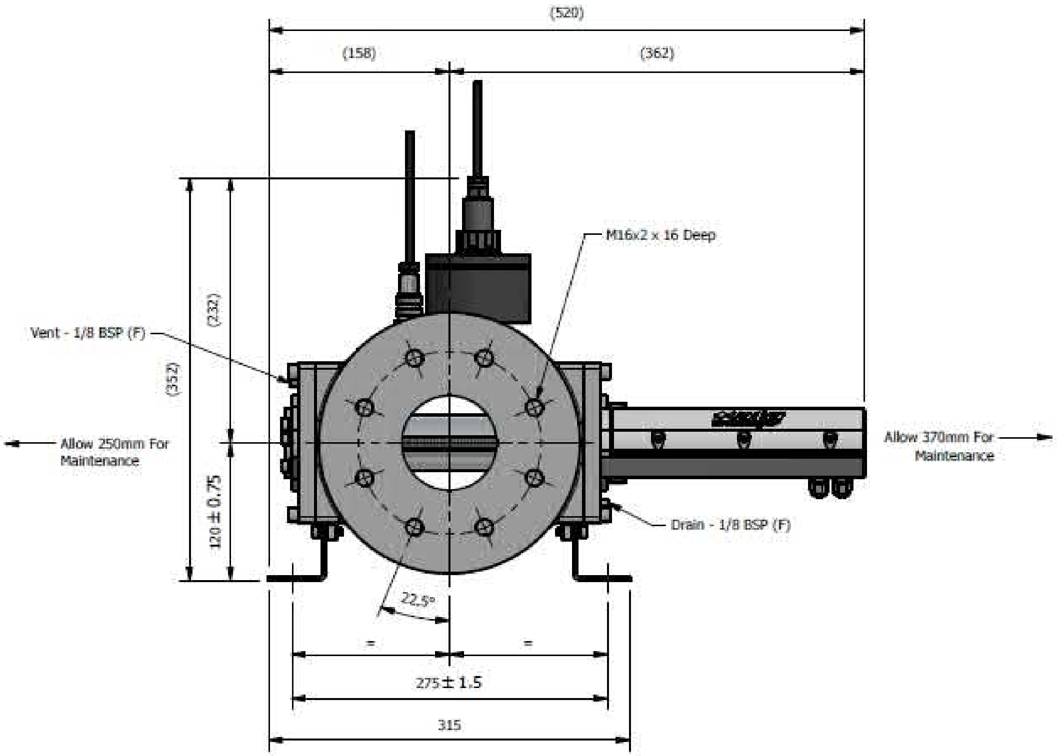

Figure 2.4a ATG WF-115-4 Reactor, end view, upstream side. (Source: ATG)

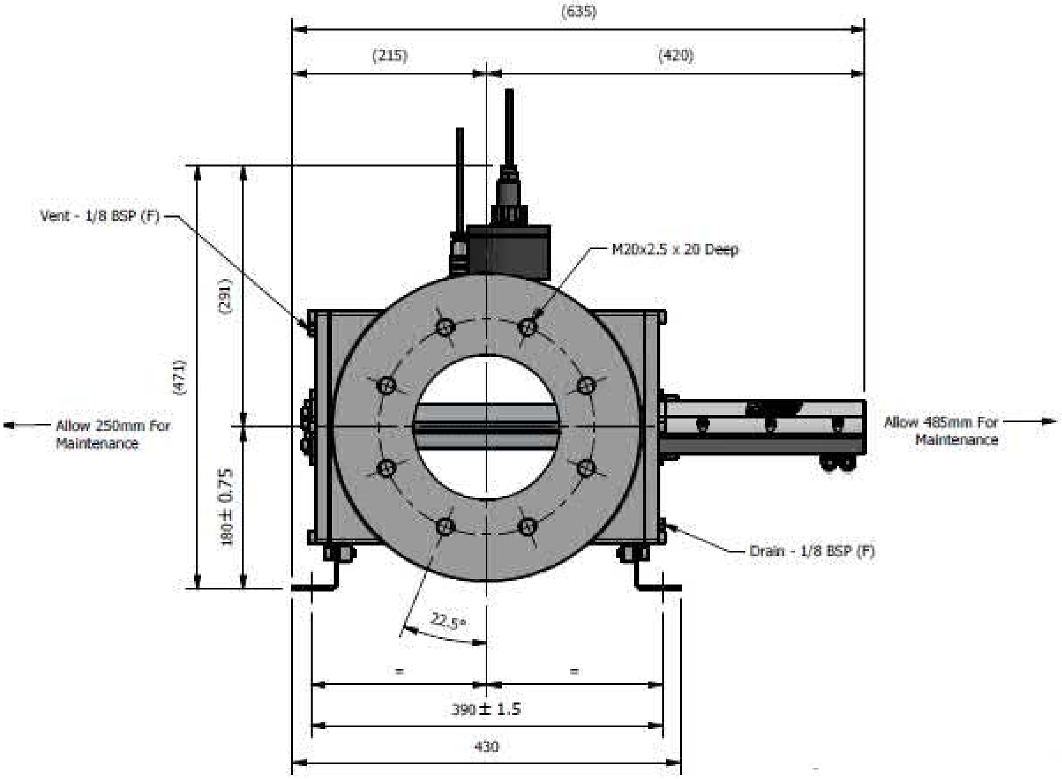

Figure 2.4b ATG WF-125-6 Reactor, end view, upstream side. (Source: ATG)

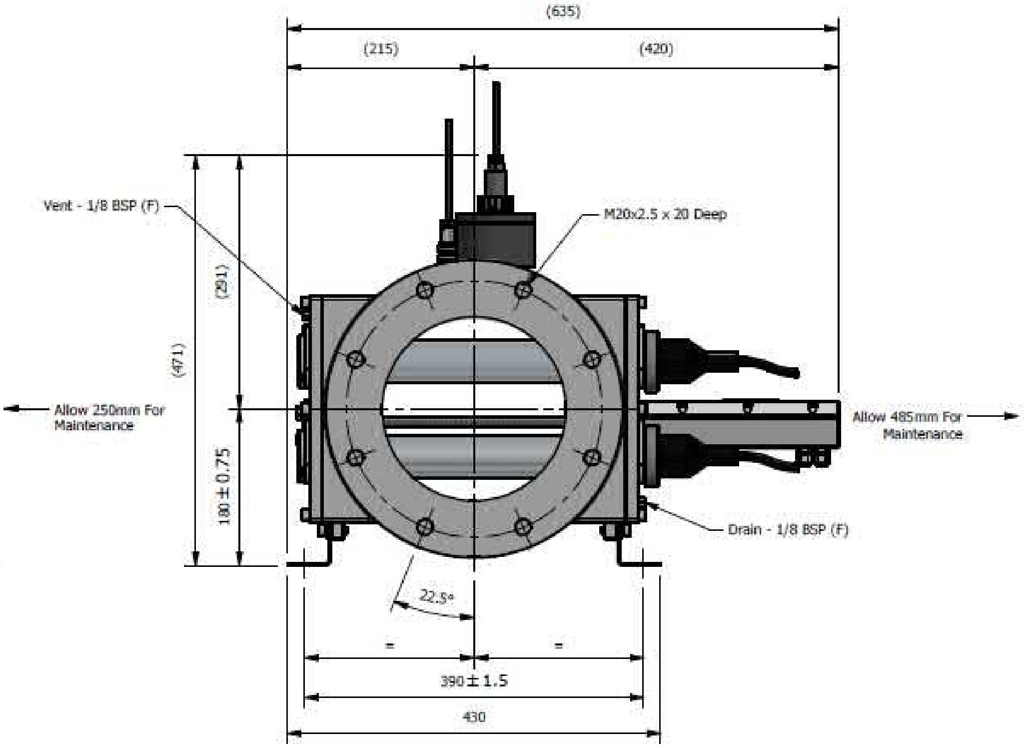

Figure 2.4c ATG WF-225-8 Reactor, end view, upstream side. (Source: ATG)

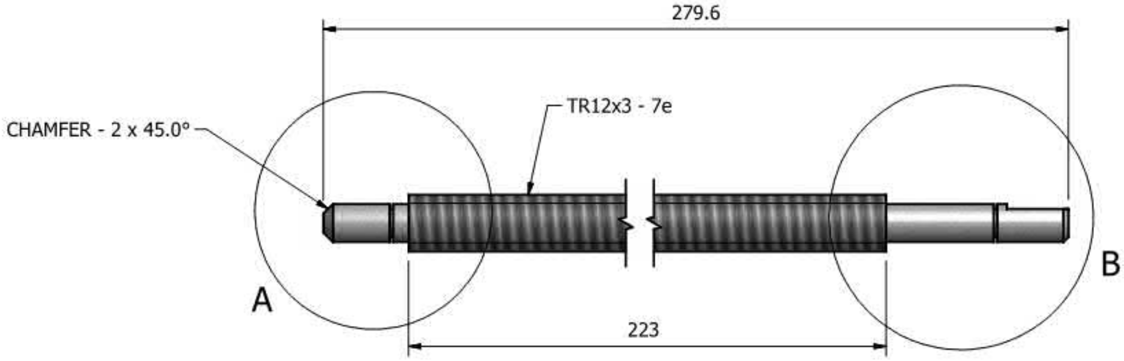

Figure 2.5a Wiper Shaft for the ATG WF-115-4 Reactor. (Source: ATG)

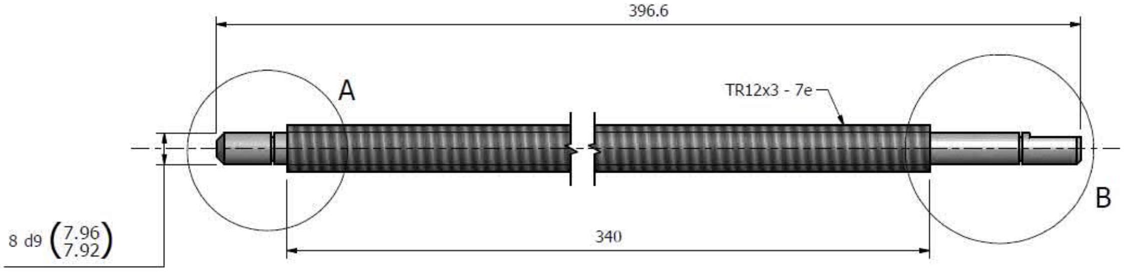

Figure 2.5b Wiper Shaft for the ATG WF-125-6 and WF-225-8 Reactors. (Source: ATG)

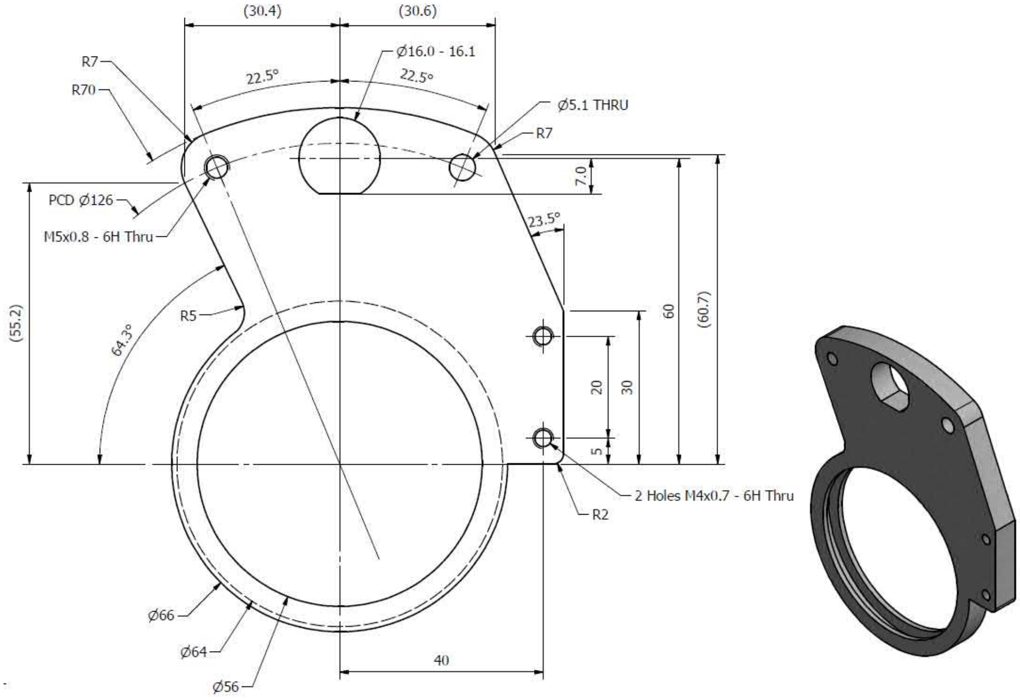

Figure 2.6a Wiper Carriage for the ATG WF-115-4 and WF-125-6 Reactors. (Source: ATG)

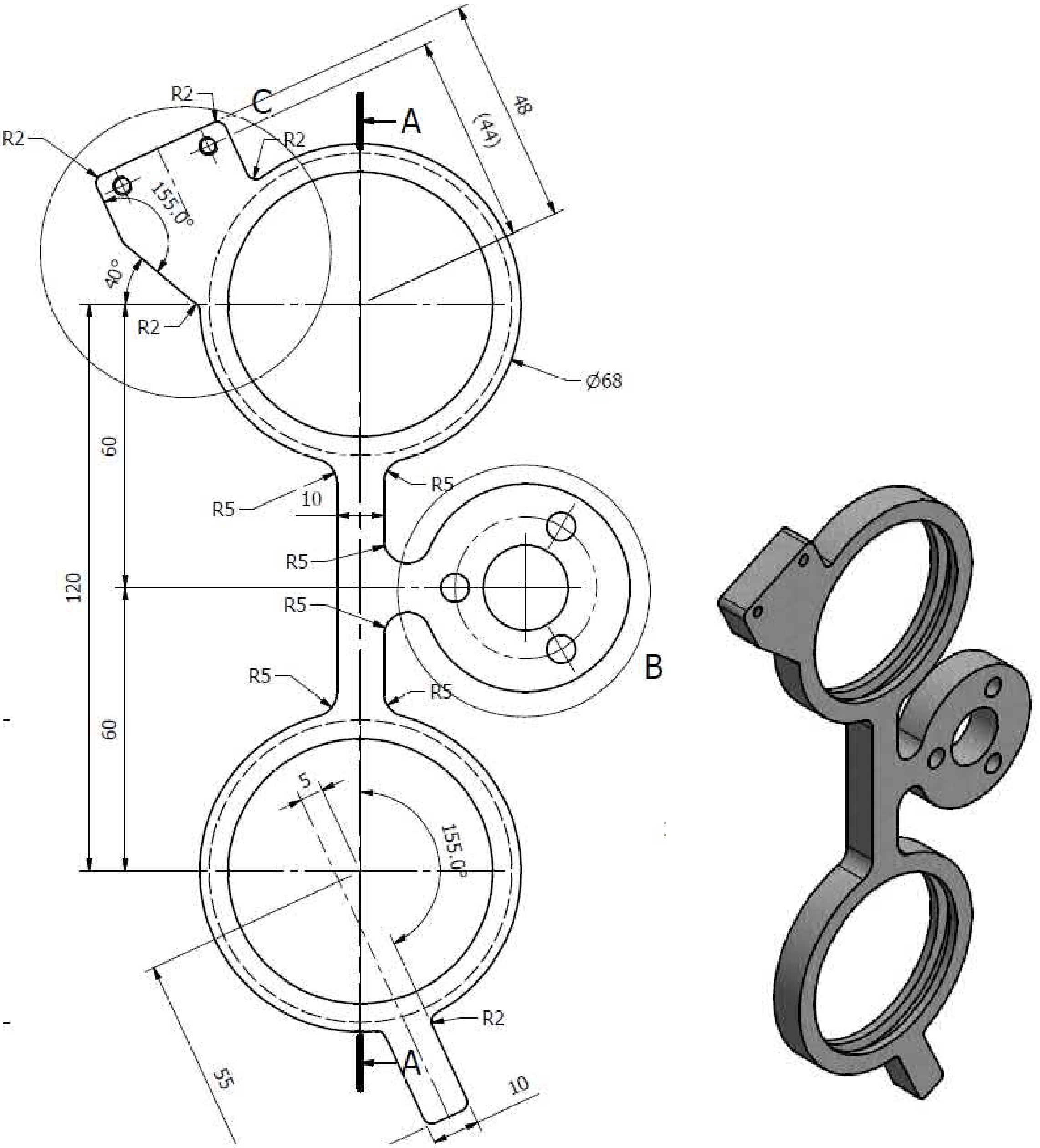

Figure 2.6b ATG WF-225-8 Reactor, wiper carriage. (Source: ATG)

Table 2.1 Key dimensions for the WF-115-4 UV Reactor

Description	ATG Drawing Reference	ATG Drawing Dimension (mm)	ATG Tolerance	Measured Dimension (mm)	Field Tolerance	Within Tolerance?
Reactor Shell						
Length (parallel to flow, including inlet and effluent flange thickness)	CGA_WF_-115-4_33Z_N14	160	1.5	160.02	1.6	yes
Length (excluding inlet flange and effluent flange thickness)	CGA_WF_-115-4_33Z_N14	120	1.5	114.30	1.6	no
Width (along lamp, not including wiper mechanism or flange thicknesses)	CGA_WF-115-4	234	1.5	233.68	1.6	yes
Interior Height (measured at the lamp-side face of reactor)	CGA_WF-115-4	119.2	1.5	120.02	1.6	yes
Inlet & Outlet Flange Inner Diameter	CGA_WF-115-4	108.2	1.5	114.30	1.6	no
UV Lamp						
Electrode to Electrode (Arc Length)	W1502002 V2	110	2	108	1.6	yes
Length from wetted side of reactor wall to beginning of lamp arc	1.5 kW Short Lamp (W1502002)	62	2	62.07	1.2	yes
Outer diameter of lamp	W1502002	22	0.26	22	0.3	yes

Table 2.1 Key dimensions for the WF-115-4 UV Reactor

Description	ATG Drawing Reference	ATG Drawing Dimension (mm)	ATG Tolerance	Measured Dimension (mm)	Field Tolerance	Within Tolerance?
Lamp Quartz Sleeve						
Length	W2020101	270	0.5	269.88	1.6	yes
Outside diameter	W2020101	49	0.5	49.12	0.3	yes
Wall Thickness	CGA_WF-115-4	2	0.2	2.00	0.3	yes
Distance from inlet flange face to centerline of quartz sleeve	CGA_WF-115-4	99.5	0.1	100	1.6	yes
Sensor Position						
Distance from top view of sensor centerline to outer edge of outlet flange	CGA_WF-115-4	75	0.1	74.17	1.6	yes
Wiper Mechanism						
Wiper Carriage Thickness	W5449998	8.0	0.2	8.15	0.3	yes
Wiper Drive Screw Diameter	W5401113	12	0.1	11.90	0.3	yes
Wiper Plate Connection Shaft Diameter	W5401113	7.96	0.04	8.0	0.3	yes
Wiper Plate Spacer Diameter	W5410024	21	0.2	21	0.3	yes
Wiper Spacing (including thickness of wipers)	CGA_WF-115-4	40	0.4	40.30	0.3	yes
Wiper Screw Placement (Inlet flange face to centerline)	CGA_WF-115-4	39.5	1.5	40	1.6	yes

Table 2.1 Key dimensions for the WF-115-4 UV Reactor

Description	ATG Drawing Reference	ATG Drawing Dimension (mm)	ATG Tolerance	Measured Dimension (mm)	Field Tolerance	Within Tolerance?
Sensor Port Quartz Window						
Overall height	W2900322	20.0	0.15	19.90	0.3	yes
Overall Width (diameter of top hat)	W2900322	19.85	0.05	19.85	0.3	yes
Height of top hat portion	W2900322	5.00	0.05	5.03	0.3	yes
Diameter of bottom portion of quartz window	W2900322	7.80	0.05	7.75	0.3	yes
Casting thickness	CGA_WF-115-4	10.4	0.1	10.65	0.3	yes
Insertion depth (length from interior of casting to end of quartz window)	CGA_WF-115-4	5.6	0.5	4.22	0.9	no
Recess depth from casting surface to machined surface	CGA_WF-115-4	1	0.2	1.47	0.3	yes
Hole in reactor for window ID	CGA_WF-115-4	8.2	0.1	8.2	0.3	yes

Table 2.2 Key dimensions for the WF-125-6 UV Reactor

Description	ATG Drawing Reference	ATG Drawing Dimension (mm)	ATG Tolerance	Measured Dimension (mm)	Field Tolerance	Within Tolerance?
Reactor Shell						
Length (parallel to flow, including inlet and effluent flange thickness)	CGA_WF_-125-6_33Z_N14	180	1.5	180	1.6	yes
Length (excluding inlet flange and effluent flange thickness)	CGA_WF_-125-6_33Z_N14	120	1.5	130	1.6	no
Width (along lamp, not including wiper mechanism or flange thicknesses)	CGA_WF-125-6	350	1.5	347.7	1.6	yes
Interior Height (measured at the lamp-side face of reactor – top plate is pitched towards the middle)	CGA_WF-125-6	228.90	1.5	230.4	1.6	yes
Inlet & Outlet Flange Inner Diameter	CGA_WF-125-6	161.5	1.5	161.4	1.6	yes
UV Lamp						
Electrode to Electrode (Arc Length)	W1502003	220	2	219	1.6	yes
Length from wetted side of reactor wall to beginning of lamp arc	1.5 kW Long Lamp (W1502004)	67	2	60	1.2	No
Outer diameter of lamp	W1502003	22	0.26	22	0.3	yes

Table 2.2 Key dimensions for the WF-125-6 UV Reactor

Description	ATG Drawing Reference	ATG Drawing Dimension (mm)	ATG Tolerance	Measured Dimension (mm)	Field Tolerance	Within Tolerance?
Lamp Quartz Sleeve						
Length	W2020102	385	0.5	387.35	1.6	no
Outside diameter	W2020102	49	0.5	48.97	0.3	yes
Wall Thickness	CGA_WF-125-6	2	0.2	1.99	0.3	yes
Distance from inlet flange face to centerline of quartz sleeve	CGA_WF-125-6	115	0.1	115	1.6	yes
Sensor Position						
Distance from top view of sensor centerline to outer edge of outlet flange	CGA_WF-125-6	90	0.1	90	1.6	yes
Wiper Mechanism						
Wiper Carriage Thickness	W5449998	8.0	0.2	8.0	0.3	yes
Wiper Drive Screw Diameter	W5401114	12	0.1	12	0.3	yes
Wiper Plate Connection Shaft Diameter	W5401114	7.96	0.2	8.0	0.3	yes
Wiper Plate Spacer Diameter	W5410024	21	0.2	21	0.3	yes
Wiper Spacing (including thickness of wipers)	CGA_WF-125-6	40	0.4	40.10	0.3	yes
Wiper Screw Placement (Inlet flange face to centerline)	CGA_WF-125-6	55	1.5	54	1.6	yes

Table 2.2 Key dimensions for the WF-125-6 UV Reactor

Description	ATG Drawing Reference	ATG Drawing Dimension (mm)	ATG Tolerance	Measured Dimension (mm)	Field Tolerance	Within Tolerance?
Sensor Port Quartz Window						
Overall height	W2900322	20.0	0.15	19.90	0.3	yes
Overall Width (diameter of top hat)	W2900322	19.85	0.05	19.85	0.3	yes
Height of top hat portion	W2900322	5.00	0.05	5.0	0.3	yes
Diameter of bottom portion of quartz window	W2900322	7.80	0.05	7.75	0.3	yes
Casting thickness (has a pitched top, average thickness is recorded)	CGA_WF-125-6	13.06	0.1	13.30	0.3	yes
Insertion depth (length from interior of casting to end of quartz window)	CGA_WF-125-6	3.9	0.4	2.47	0.9	no
Recess depth from casting surface to machined surface	CGA_WF-125-6	1.5	0.2	0.87	0.3	no
Hole in reactor for window ID	CGA_WF-125-6	8.2	0.1	8.2	0.3	yes

Table 2.3 Key dimensions for the WF-225-8 UV Reactor

Description	ATG Drawing Reference	ATG Drawing Dimension (mm)	ATG Tolerance	Measured Dimension (mm)	Field Tolerance	Within Tolerance?
Reactor Shell						
Length (parallel to flow, including inlet and effluent flange thickness)	CGA_WF_-225-8_33Z_N14	180	1.5	180	1.6	yes
Length (excluding inlet flange and effluent flange thickness)	CGA_WF_-225-8_33Z_N14	120	1.5	130	1.6	no
Width (along lamp, not including wiper mechanism or flange thicknesses)	CGA_WF-225-8	350	1.5	347.7	1.6	yes
Interior Height (measured at the lamp-side face of reactor – top plate is pitched towards the middle)	CGA_WF-225-8	228.90	1.5	231	1.6	yes
Inlet & Outlet Flange Inner Diameter	CGA_WF-225-8	211.6	1.5	211.25	1.6	yes
UV Lamp						
Electrode to Electrode (Arc Length)	W1502004	220	2	219	1.6	yes
Length from wetted side of reactor wall to beginning of lamp arc	2.5 kW Lamp (W1502003)	67	2	60	1.2	no
Outer diameter of lamp	W1502004	22	0.26	22	0.3	yes

Table 2.3 Key dimensions for the WF-225-8 UV Reactor

Description	ATG Drawing Reference	ATG Drawing Dimension (mm)	ATG Tolerance	Measured Dimension (mm)	Field Tolerance	Within Tolerance?
Lamp Quartz Sleeve						
Length	W2020102	385	0.5	387.35	1.6	no
Outside diameter	W2020102	49	0.5	48.97	0.3	yes
Wall Thickness	CGA_WF-225-8	2	0.2	1.99	0.3	yes
Distance from outlet flange face to centerline of bottom quartz sleeve (closest to outlet flange)	CGA_WF-225-8	64.64	0.1	64.7	1.6	yes
Distance between sleeves (measured from the side of the reactor; far side of the bottom-most sleeve to the far side of the top-most sleeve)	CGA_WF-225-8	120	1.5	119.4	1.6	yes
Sensor Position						
Distance from top view of sensor centerline to outer edge of outlet flange	CGA_WF-225-8	90	0.1	90	1.6	yes
Wiper Mechanism						
Wiper Carriage Thickness	W5449999	10	0.2	10.4	0.3	yes
Wiper Drive Screw Diameter	W5401114	12	0.1	12	0.3	yes
Wiper Plate Connection Shaft Diameter	W5401114	7.96	0.2	8.0	0.3	yes
Wiper Screw Placement (Inlet flange face to centerline)	CGA_WF-225-8	58.3	1.5	58.5	1.6	yes

Table 2.3 Key dimensions for the WF-225-8 UV Reactor

Description	ATG Drawing Reference	ATG Drawing Dimension (mm)	ATG Tolerance	Measured Dimension (mm)	Field Tolerance	Within Tolerance?
Wiper Drive Maximum Diameter	W5415000	42	0.2	42	0.3	yes
Wiper Drive Length (length includes 2 wiper body lids and 1 wiper body shaft)	W5415000 & W5415010	51.2	0.14	47.8	1.6	no
Sensor Port Quartz Window						
Overall height	W2900322	20.0	0.15	19.90	0.3	yes
Overall Width (diameter of top hat)	W2900322	19.85	0.05	19.85	0.3	yes
Height of top hat portion	W2900322	5.00	0.05	5.0	0.3	yes
Diameter of bottom portion of quartz window	W2900322	7.80	0.05	7.75	0.3	yes
Casting thickness (has a pitched top, average thickness is recorded)	CGA_WF-225-8	13.06	0.1	13.30	0.3	yes
Insertion depth (length from interior of casting to end of quartz window)	CGA_WF-225-8	3.9	0.4	2.47	0.9	no
Recess depth from casting surface to machined surface	CGA_WF-225-8	1.5	0.2	0.87	0.3	no
Hole in reactor for window ID	CGA_WF-225-8	8.2	0.1	8.2	0.3	yes

2.2 LAMPS

The WF-115-4 UV reactor used one 1.5 kW MP lamp during validation testing with a part number W1502002. The lamp has an arc length of 100 mm and a diameter of 22 mm. The lamp operates at a voltage of 160 V and a current 10.4 amps. The WF-125-6 uses one 2.5 kW MP lamp and the WF-225-8 uses two 2.5 kW MP lamps with a part number of W1502003 during validation testing. The 2.5 kW lamps have an arc length of 220 mm and a diameter of 22 mm. The lamps operate at a voltage of 280 V and a current 9.5 amps.

All lamps were manufactured by ATG. The lamp drawing sheets are provided in Appendix G. The spectral output of each lamp is shown in Figure 2.7. Table 2.4 shows the germicidal spectral output for each lamp over the range of wavelengths from 200 to 300 nm.

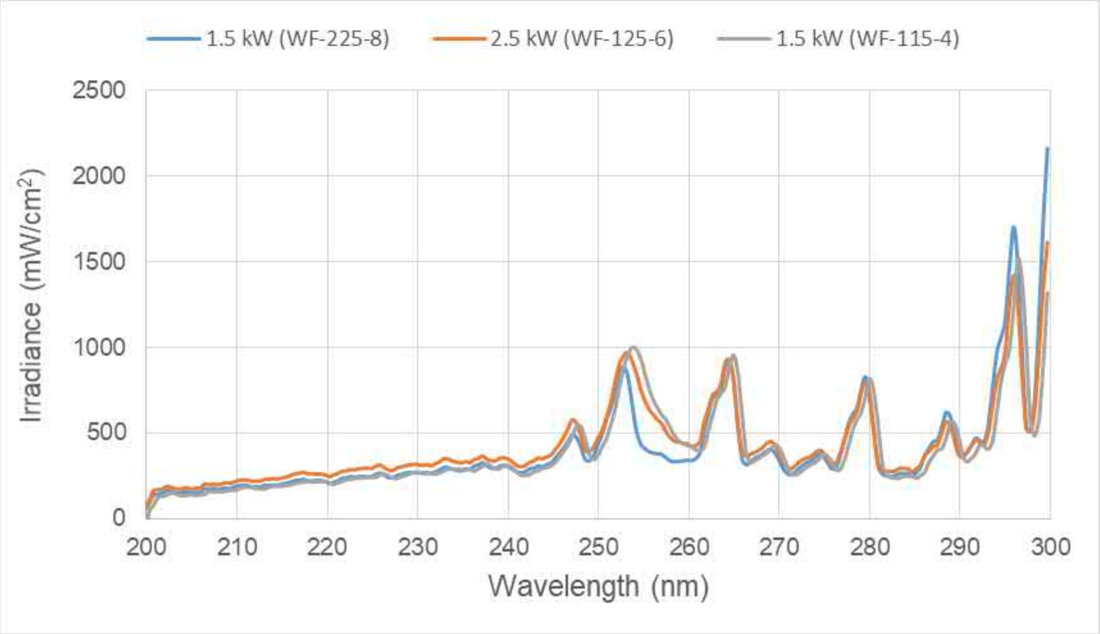

Figure 2.7 Spectral Output for the MP UV lamps used during Validation Testing (Source: ATG)

Table 2.4 Germicidal Output of the MP UV lamps used During Validation Testing			
Wavelength (nm)	**1.5 kW - WF-115-4 (mW/cm²)**	**2.5 kW - WF-125-6 (mW/cm²)**	**1.5 kW - WF-225-8 (mW/cm²)**
200	90.23	106.47	80.38
205	157.90	180.40	141.12
210	188.17	218.03	175.72
215	203.07	238.53	196.25
220	206.57	246.47	201.48
225	260.93	309.27	256.48
230	272.00	319.37	273.32
235	279.53	325.87	285.62
240	304.90	348.93	298.78
245	326.67	371.93	329.18
250	430.87	471.03	419.58
255	441.47	762.63	854.25
260	342.30	438.37	420.02
265	785.20	795.80	839.45
270	372.90	416.00	399.72
275	331.70	351.07	336.65
280	828.90	798.47	819.52
285	248.40	273.80	236.45
290	377.07	373.33	363.78
295	1056.00	877.57	903.42
300	2162.97	1613.87	1687.45

2.3 LAMP SLEEVES

The sleeves used for the WF-115-4, WF-125-6, and WF-225-8 UV reactors are GE214 clear fused quartz tubes manufactured by GE. The quartz tube in the WF-115-4 UV reactor has a length of 270 mm, whereas the quartz tubes in the WF-125-6 and WF-225-8 UV reactors have a length of 385 mm. The quartz tubes have a diameter of 49 mm. Technical data on the sleeves is provided in Appendix G. Figure 2.8 shows the dimensions of the quartz sleeves, and Figure 2.9 shows the transmittance characteristics.

Figure 2.8a **Quartz Sleeve Detail for the WF-115-4 Reactor. All dimensions in mm. (Source: ATG)**

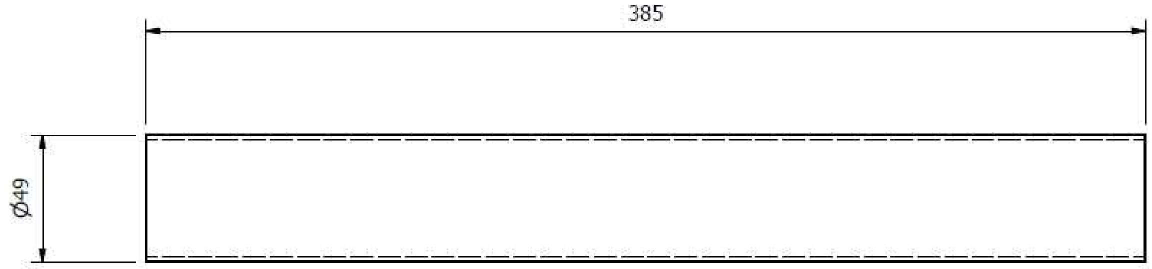

Figure 2.8b **Quartz Sleeve Detail for the WF-125-6 and the WF-225-8. All dimensions in mm. (Source: ATG)**

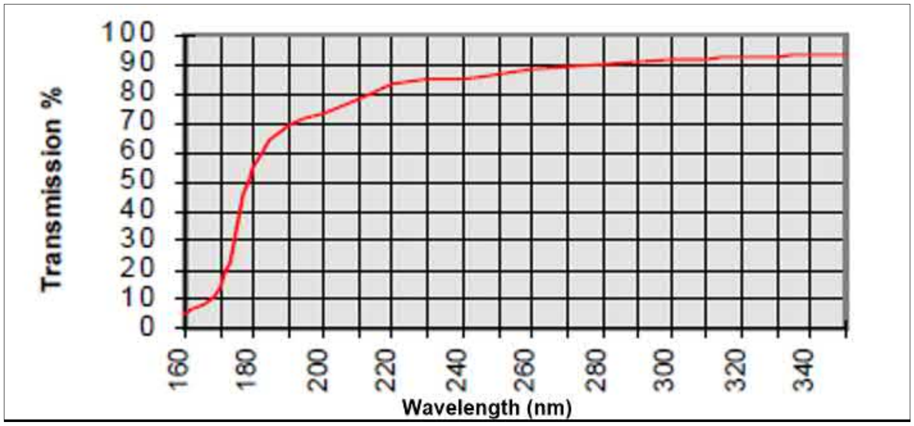

Figure 2.9 **Quartz Sleeve Transmittance Characteristics Detail. (Source: GE)**

2.4 UV BALLASTS

The ballasts used to operate the WF-115-4 and WF-225-8 were magnetic ballasts with a power of 1.5 kW, and supply voltages of 208 V, 220 V, and 230 V. The ballast used to operate the WF-125-6 was a magnetic ballast with a power of 2.5kW, and supply voltages of 230 V, 400 V, and 415 V. The ballasts allow for variable input power to the lamp, with selectable lamp ampere settings ranging between 5.0 and 11.0 for the WF-115-4, and 5.0 and 10.0 for the WF-125-6 and WF-225-8 UV reactors. Technical data on the ballasts is provided in Appendix G.

2.5 UV INTENSITY SENSORS

The UV intensity sensors used during validation were SUV 20.1 A2 Y2 C, manufactured by UV-technik of Gewerbegebiet, Germany. During functional and bioassay testing, the WF-115-4 and WF-225-8 used 300W sensors and the WF-125-6 used 150W sensors. Each UV sensor was designed to measure UV light in accordance with the Austrian ÖNORM M 5873-1:2001-03 Standard. According to this standard, the UV sensor has a measurement uncertainty of a maximum of 15% and is calibrated in W/m^2 by comparison with a reference UV sensor. The measurement uncertainty accounts for temperature drift and stability of the UV sensor when mounted on the reactor. Figure 2.10 shows the dimensions of the UV sensor. The data sheets for the UV sensors are provided in Appendix B.

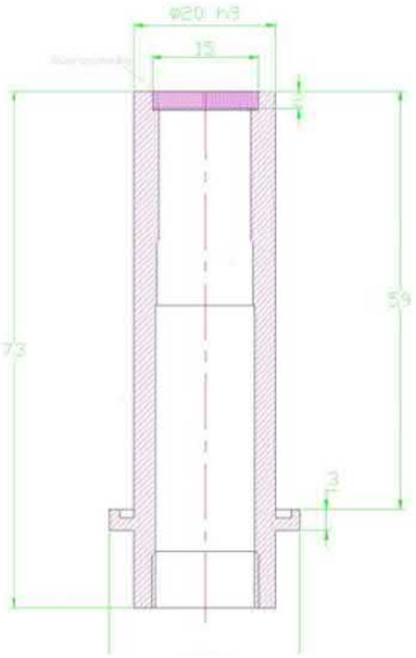

Figure 2.10 UV Sensor Detail. All dimensions in mm. (Source: ATG)

2.6 REFERENCE UV INTENSITY SENSORS

During operation of the UV reactors, reference UV sensors should be used to regularly check the operation of the duty UV sensor. The reference UV sensors are SUV 20.1 A2 Y2 C, manufactured by uv-technik Speziallampen GmbH of Wolfsberg, Germany. The reference UV sensor is designed to measure UV light in accordance with the Austrian ÖNORM M 5873-1:2001-03 Standard, which dictates that the reference UV sensor should have a measurement uncertainty of at most 15 percent. Appendix B provides a report on the calibration and linearity of the reference UV sensors used with this validation, as well as tabulated data on UV sensor measurement properties.

2.7 UV SENSOR PORT

The WF-115-4, WF-125-6, and WF-225-8 reactors are each equipped with a single UV sensor-mounting apparatus, which include threaded connections into the reactor. The UV sensor is inserted into the UV sensor port and views the lamps through a quartz window located at the end of the port. Information on the dimensions and material for the UV sensor port window can be found in Appendix G.

VALIDATION FACILITIES

The ATG WF-115-4, WF-125-6, and WF-225-8 UV reactors were validated at a test facility located at the Groundwater Pumping Station of the Columbia Southshore Wellfield in Portland, Oregon. The Columbia Wellfield is a 90 mgd supplemental drinking water supply owned and operated by the Portland Water Bureau. The groundwater typically has the following water quality:

- UVT_{254}:	98.2 percent average, 97.3 - 99.0 percent range
- TOC:	<0.1 - 1.4 mg/L
- Hardness:	38 - 144 mg/L
- Alkalinity:	34 - 169 mg/L $CaCO_3$
- pH:	7.7 - 8.2
- Chlorine:	below detection limit

3.1 TEST TRAIN

Figure 3.1 shows the layout of the validation facility's fixed inlet and outlet piping. The permanent test piping at the test facility includes 24- and 30-inch test trains. The 24-inch test train was used to validate the WF-115-4, WF-125-6, and WF-225-8 UV reactors. Permanent test train components included, in order:

- Two 24-inch diameter supply lines connecting the test train to the Portland water supply. Primary flow regulation is provided by butterfly valves on each 24-inch supply line
- One 30-inch check valve on each supply line, for backflow prevention
- 30-inch magnetic flowmeter with >10 and 5 pipe diameters of inlet and outlet piping (not used for the validation)
- 24-inch 90 degree elbow take off from the inlet 30-inch inlet pipe

A 120-gpm injection loop was used for spiking the UV absorber and microorganisms into the 24-inch test train. Suction and return lines were made by 3-inch flexible connections. The suction line from the main process train was located approximately 4 feet downstream from the 30-inch flowmeter on the 30-inch section of the permanent test piping. A gate valve was installed on the suction side of the recirculation system pump to allow for reduced flow to meet the needs of individual low-flow test runs. For this validation, the return line fed into a dual port cross-pipe diffuser installed located in plastic pipe upstream of the network described below.

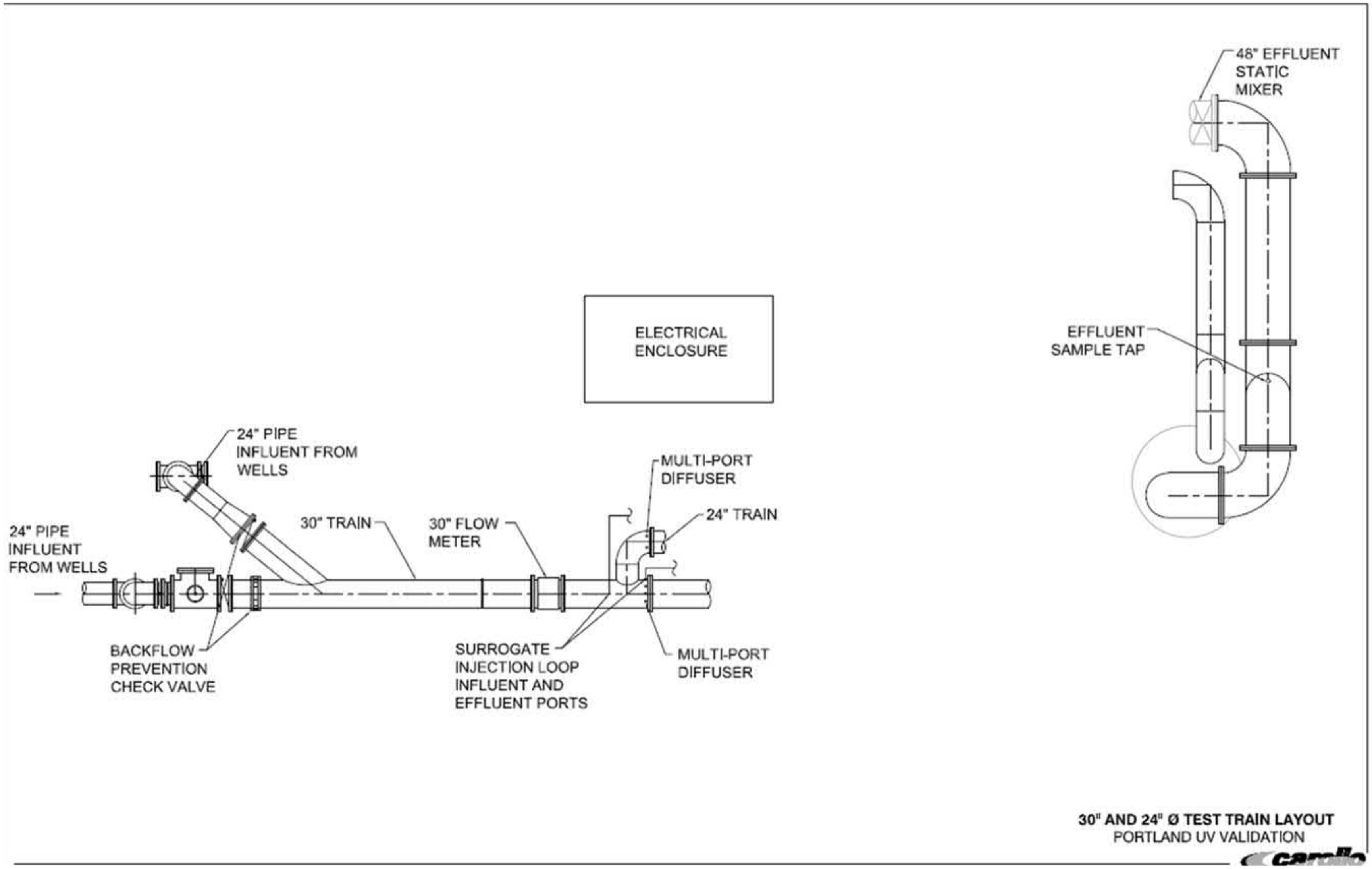

Figure 3.1 **Portland Validation Site Treatment Train Layout**

During validation, the WF-115-4, WF-125-6, and WF-225-8 were installed in parallel. Figure 3.2 shows a plan view of the overall piping network for the validation installation from the point of the connection with the permanent test piping to the discharge.

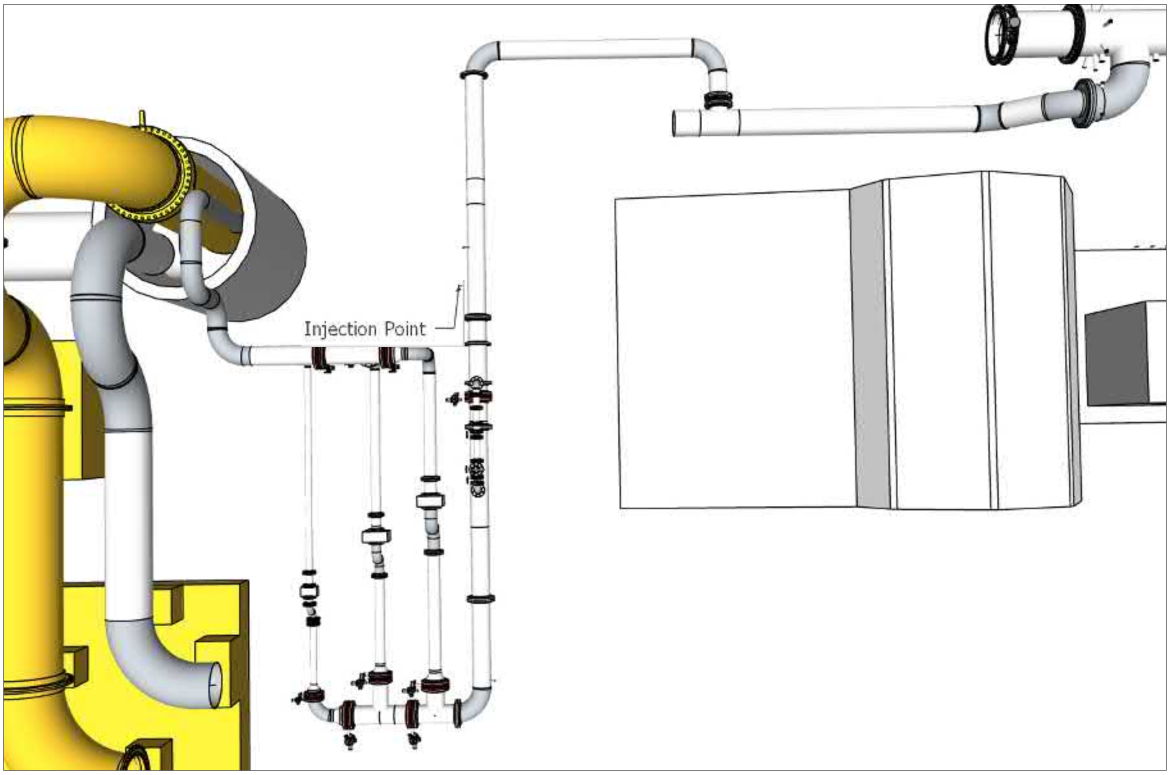

Figure 3.2 Plan View of the Inlet and Outlet Piping to the ATG WF UV Reactors

The common inlet piping feeding all UV reactors from the fixed facility piping included:

- 24” to 18” diameter companion flange
- 18” diameter 45 degree bend
- 30 inches of 18” diameter pipe
- 18” diameter 45 degree bend
- 166 inches of 18” diameter pipe
- 18”- 12” diameter Tee
- 12” diameter butterfly valve
- 15 inches of 12” diameter plastic pipe
- 12” diameter plastic 90 degree elbow
- 135 inches of 12” diameter plastic pipe
- 12” diameter plastic 90 degree elbow
- 120 inches of 12” diameter plastic to the page and UV absorber injection point

Figure 3.3 shows a detailed drawing of the pipe network from the injection point through the flow meter and static mixing network to the inlet sample tap.

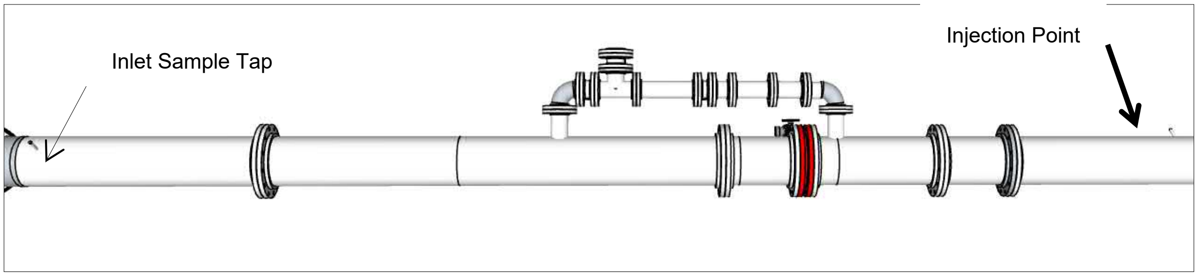

Figure 3.3 Common inlet piping from injection point to inlet sample tap

Due to the wide range of flows required for validation of the UV reactors, it was necessary to configure the inlet piping with a low-flow leg using a 4 inch magnetic flow meter and a high-flow leg using a 12 inch magnetic flow meter. This setup is shown in Figure 3.4.

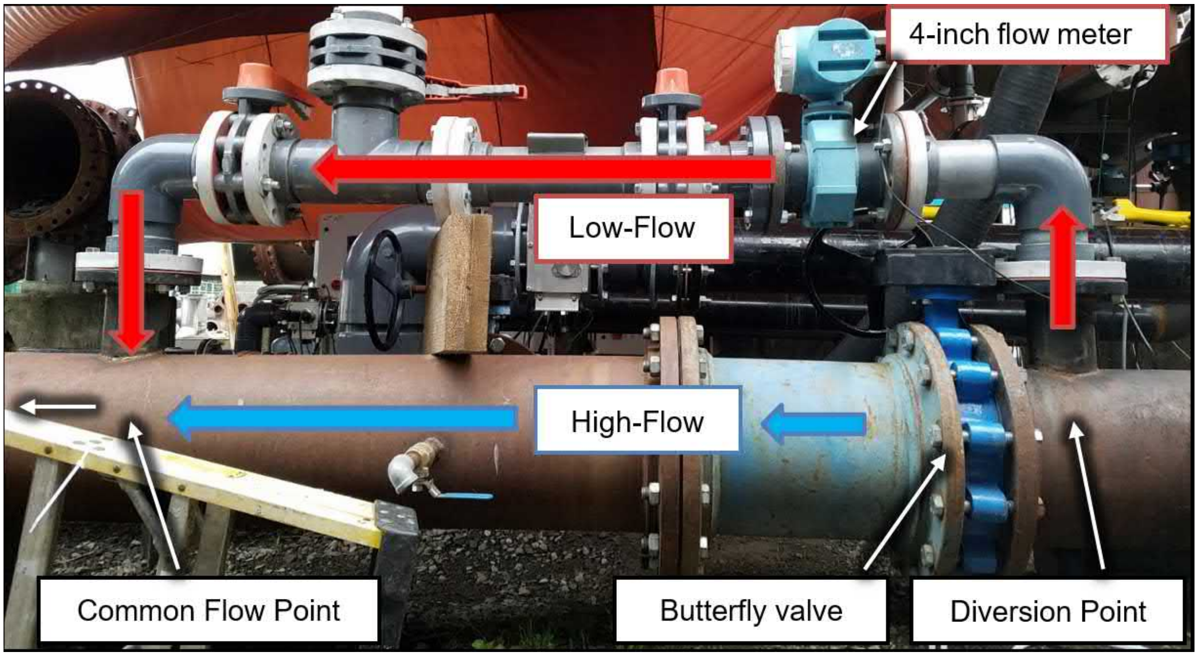

Figure 3.4 Low-flow and high-flow configurations for Testing the WF-115-4, WF-125-6, and WF-225-8 Reactors

Specific components of the high-flow shared inlet piping network shown in Figure 3.4 include:

- UV absorber and Phage injection point
- 48 inches of 12” diameter plastic pipe
- 12” diameter magnetic flow meter (18 inches in length)
- 24 inches of 12” diameter steel pipe

- 12” diameter butterfly valve
- 12” diameter static mixer (19 inches in length)
- 173 inches of 12” diameter steel pipe
- Inlet sample tap used for all reactors.

Specific components of the low-flow shared inlet piping network shown in Figure 3.4 include:

- UV absorber and Phage injection point
- 48 inches of 12” diameter plastic pipe
- 12” diameter magnetic flow meter (18 inches in length)
- 27 inches of 12” diameter steel pipe.
- 8 inch long 4” diameter riser
- 4” diameter 90 degree elbow
- 13 inches of 4” diameter PVC pipe
- 4” magnetic flow meter
- 5 inches of 4” diameter PVC pipe
- 4” diameter butterfly valve
- 4” diameter PVC static mixer (16 inches in length)
- 11 inch long 4” diameter PVC Tee.
- 4” diameter butterfly valve
- 4” diameter 90 degree PVC elbow
- 8 inch log 4” diameter riser returning to the 12” steel pipe.

Figure 3.5 shows the WF-225-8 validation piping detail. Specific components included, from the inlet sample tap:

- 6 inches of 12” diameter steel pipe
- 12” diameter 90 degree elbow
- 12” diameter Tee
- 19 inches of 12” steel pipe from Tee
- 12” diameter butterfly valve

- 12” to 8” diameter reducer
- 80 inches of 8” diameter steel pipe
- 8” diameter PVC S-bend
- WF-225-8 UV reactor
- 82 inches of 8” diameter steel pipe
- 8” diameter 90 degree elbow
- 6 inches of 8” diameter steel pipe
- 8” diameter 90 degree elbow
- 8” to 12” diameter increaser
- 12” butterfly valve
- 40 inches of 12” diameter steel pipe
- 12” butterfly valve
- 44 inches of 12” diameter steel pipe
- 12” diameter 90 degree elbow
- 12” diameter 90 degree elbow
- 15 inches of 12” diameter steel pipe
- 12” diameter 90 degree elbow with effluent sample tap located 45 degrees around the elbow

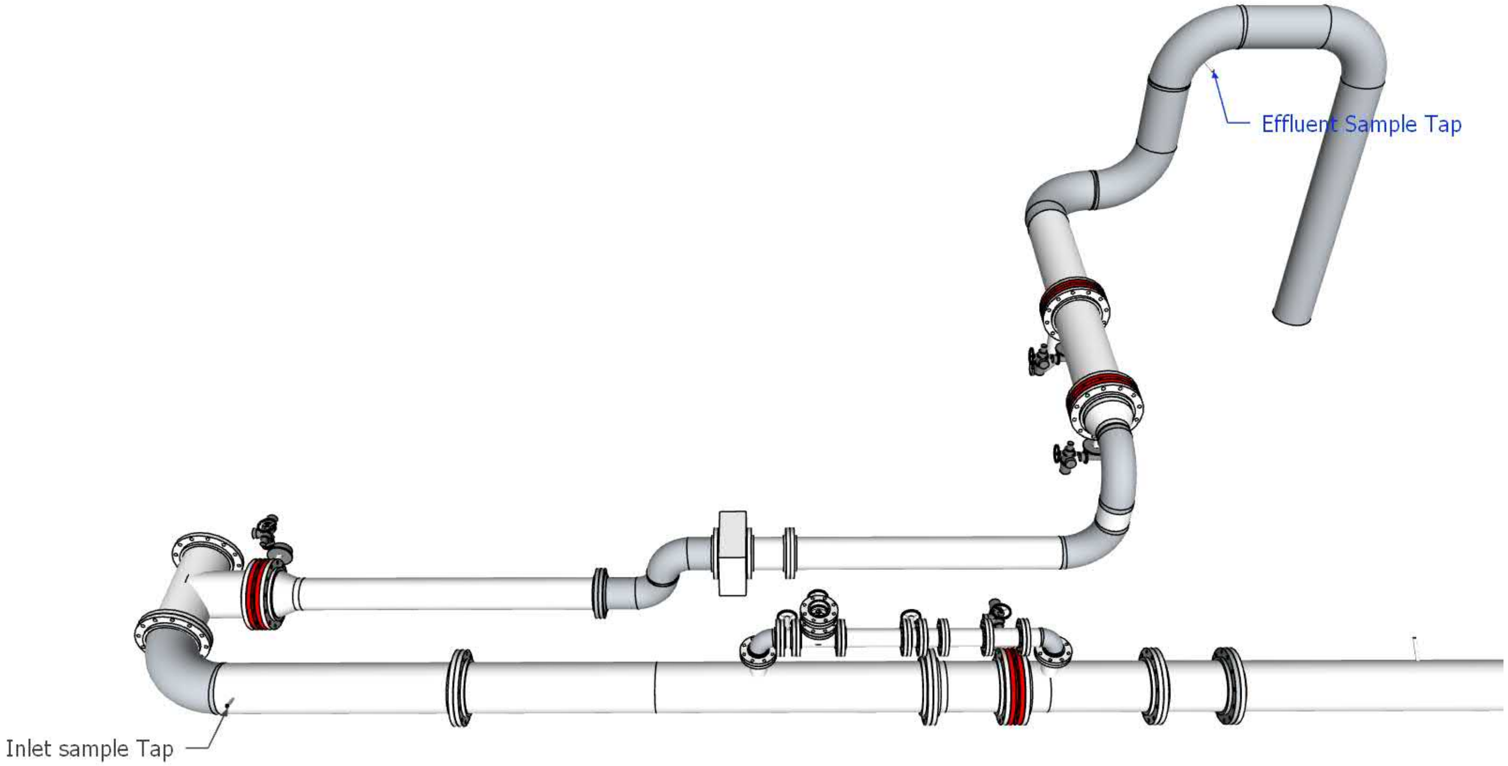

Figure 3.5 **WF 225-8 Validation Piping Detail**

Figure 3.6 shows the WF-125-6 validation piping detail. Specific components included, from the inlet sample tap:

- 6 inches of 12” diameter steel pipe
- 12” diameter 90 degree elbow
- 29 inches through a12” diameter Tee
- 12” diameter butterfly valve
- 20 inches of 12” diameter pipe into center of Tee
- 20 inches of 10” diameter pipe out of side of Tee
- 10” diameter butterfly valve
- 10” to 6” diameter reducer
- 60 inches of 6” diameter steel pipe
- 6” diameter PVC S-bend
- WF-125-6 UV reactor
- 108 inches of 6” diameter steel pipe
- 6” diameter 90 degree steel elbow
- 6 inches of 6” steel pipe
- 6” to 10” diameter increaser
- 10” diameter butterfly valve
- 3 inches of 10” diameter steel pipe into side of Tee
- 27 inches of 12” diameter steel out through Tee
- 12” butterfly valve
- 44 inches of 12” diameter steel pipe
- 12” diameter 90 degree elbow
- 12” diameter 90 degree elbow
- 15 inches of 12” diameter steel pipe
- 12” diameter 90 degree elbow with effluent sample tap located 45 degrees around the elbow

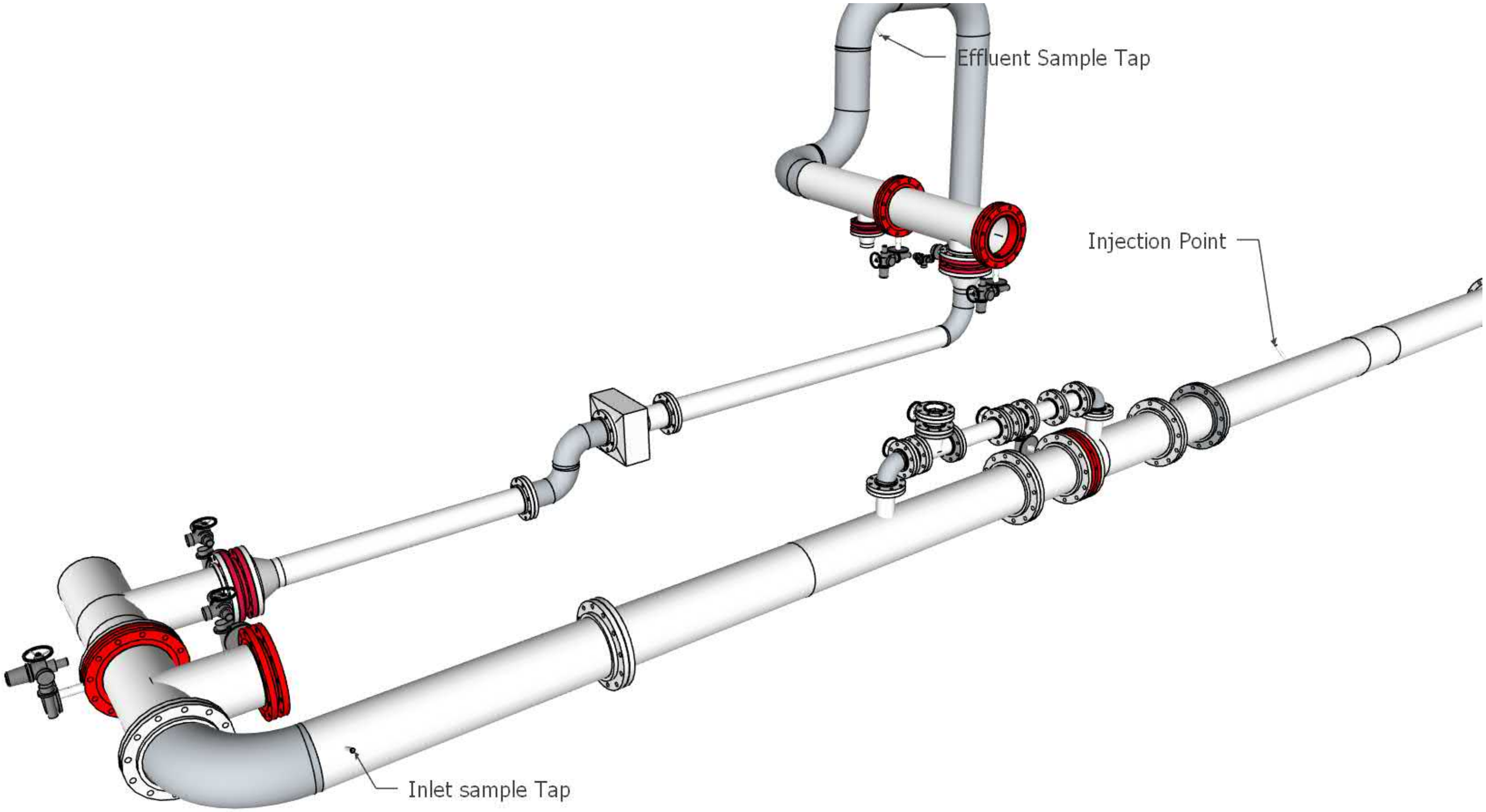

Figure 3.6 **WF 125-6 Validation Piping Detail**

Figure 3.7 shows the WF-115-4 validation piping detail. Specific components included, from the inlet sample tap:

- 6 inches of 12” diameter steel pipe
- 12” diameter 90 degree elbow
- 29 inches through a12” diameter Tee
- 12” diameter butterfly valve
- 40 inches through a 12” diameter steel Tee
- 12” diameter butterfly valve
- 12” to 8” diameter steel reducer
- 8” diameter 90 degree steel elbow
- 8” diameter butterfly valve
- 8” to 4” steel reducer
- 40 inches of 4” steel pipe
- 3 inch long 4” diameter coupling
- 4” diameter S-bend
- 5 inch long 4” diameter coupling
- WF-125-4 UV reactor
- 148 inches of 4” diameter steel pipe
- 4” diameter 90 degree elbow
- 12 inches of 4” diameter steel pipe
- 4” to 6” increaser
- 6” diameter butterfly valve
- 3 inches of 6” diameter steel riser into 12” steel pipe
- 28 inches of 12” diameter steel pipe
- 12” diameter 90 degree elbow
- 12” diameter 90 degree elbow
- 15 inches of 12” diameter steel pipe
- 12” diameter 90 degree elbow with effluent sample tap located 45 degrees around the elbow

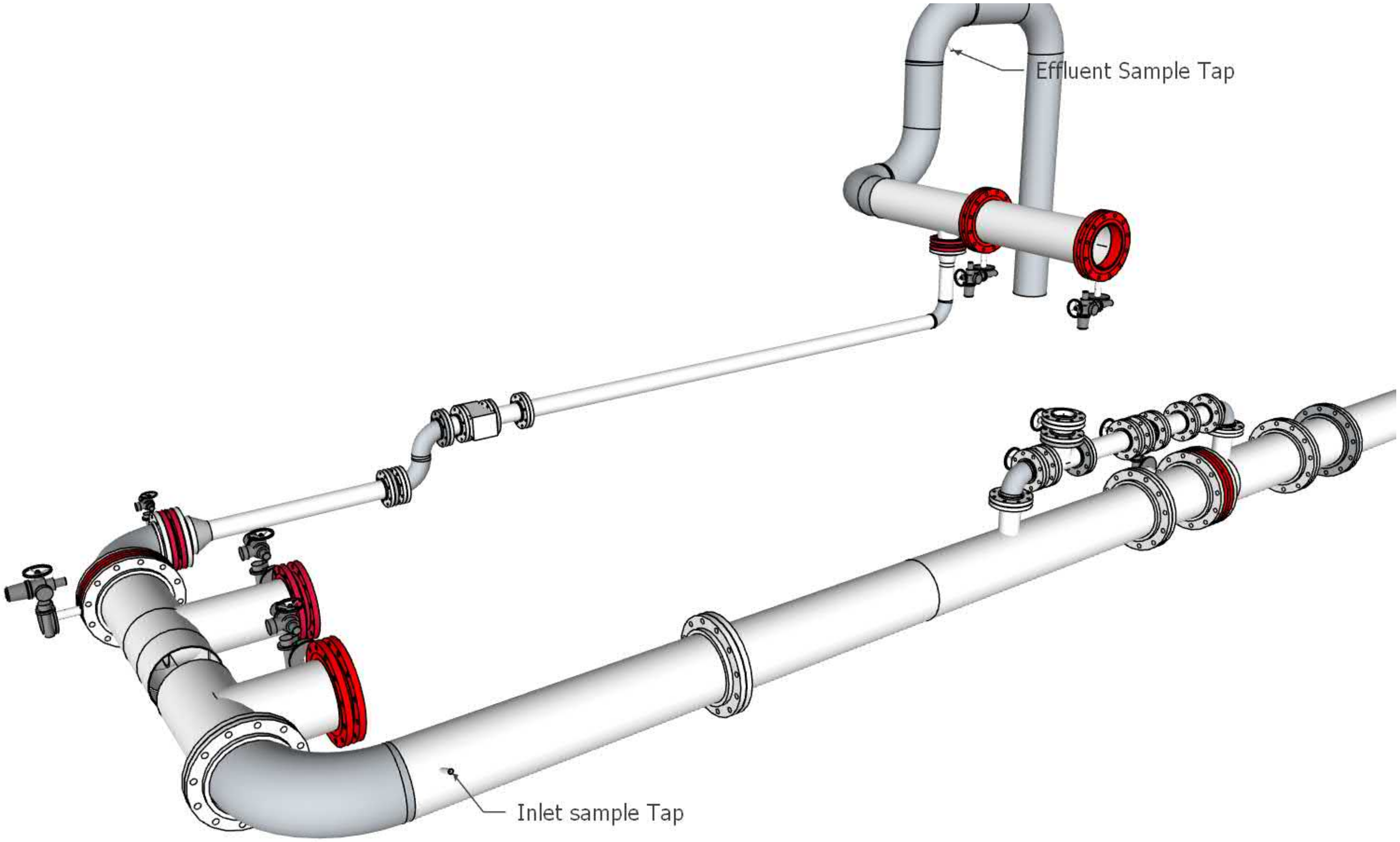

Figure 3.7 **WF 115-4 Validation Piping Detail**

Flow through the test train was monitored by a 12-inch flowmeter for all test runs and a 4-inch flowmeter for low-flow test runs. The 12-inch flowmeter was manufactured by Endress+Hauser Flowtec (Division USA, Greenwood, IN) included a 12-inch flow tube (Serial No. 7C00C816000) and a transmitter (Model No. PROMAG 53 W 12-inch). The recommended working range for the flow meter was 0.5 to 15.3 mgd. The measured flow was displayed on an LCD with an accuracy of ±0.5 percent at flow rates greater than 1 mgd and ±1.5 percent at flow rates between 0.25 to 1 mgd. The 4-inch magnetic flowmeter was manufactured by Endress+Hauser (Division USA, Greenwood, IN). The flowmeter included a 4" flowtube (Serial No. G315002307) and a transmitter (Model No. PROMAG 30 F 4"). The working range of the flowmeter was 5 to 620 gpm. The measured flow rate was displayed with a system accuracy of ± 0.5 percent from 26.2 to 620.8 gpm. Documentation for the flowmeters is provided in Appendix F.

An inlet static mixer used before the inlet sample port for both the low and high flow configurations. A 4-inch mixer used in the low flow configuration was manufactured by Komax Systems, Inc. of Wilmington, CA, (model 62216). A 12-inch mixer used in the high flow configuration was manufactured by Chemineer, Inc (model 12 HEV 2). An effluent static mixer was not included in the test train, however the number of pipe diameters between the downstream of the UV reactor and the downstream sample tap provided adequate mixing.

An injection system was used to add the UV absorber and test phage (challenge microbes) into the main water stream. Approximately 120 gpm of water was drawn from the main test train flow at a location 100 inches downstream from a 30-in flow meter. The UV absorber was added to the recirculation loop using one of two Allweiler progressive cavity pumps driven by a 1 or 2 HP motor powered by variable frequency drive (Lenze AC Tech series MC, Uxbridge, MA). Challenge microbes were then added to that flow using a variable speed drive equipped with a Micropump gear pump head (Cole-Parmer, Vernon Hills, IL).

After additive injections, the water was returned to the test train flow through two stab tubes located at the top of the 12-inch plastic pipe and at a 45 degree offset from the top of the pipe. The stab tubes injected the absorber and microorganisms into the middle of the pipe. All sampling was performed through brass or stainless steel sample taps. For all reactors, the inlet sample port was located approximately 21 pipe diameters downstream of the injection port. For the WF-225-8, the injection port was located and approximately 36 pipe diameters upstream of the reactor, and the effluent sample port was located approximately 19 pipe diameters downstream of the reactor. For the WF-125-6, the injection port was located and approximately 40 pipe diameters upstream of the reactor, and the effluent sample port was located approximately 26 pipe diameters downstream of the reactor. For the WF-115-4, the injection port was located and approximately 40 pipe diameters upstream of the reactor, and the effluent sample port was located approximately 46 pipe diameters downstream of the reactor.

3.2 PRODUCTION OF CHALLENGE MICROORGANISMS

GAP EnviroMicrobial Services (GAP), of London, Ontario (Canada) prepared the stock solutions of challenge microorganisms (MS2 and T1UV Bacteriophage) in accordance with the protocol entitled "Preparation and Storage of Concentrated Bacteriophage" (Revision 12, March 7, 2016). These documents are reviewed and revised as needed by the GAP Quality Manager and Laboratory Manager on an annual or more frequent basis. The documents are provided in Appendix C of this validation report.

Challenge microorganism stock solutions were stored in 1 L sterile polypropylene bottles and labeled to indicate date of preparation, batch number, titer, and technician ID. Stock solutions were stored in a refrigerator at 4 °C. A complete production history was kept for all batches.

The challenge microorganism feed solutions were diluted on-site in process water before use to assure the proper phage concentration in the reactor influent. The dilution ratios for the feed solutions were based on the most recent titer measurements.

3.3 ENUMERATION OF CHALLENGE MICROBES

Water samples collected during validation testing were stored in a cooler containing "blue ice" and shipped to GAP using an overnight express courier. The water samples were analyzed by GAP on the day of receipt using the bacteriophage enumeration methods described in the GAP documents entitled "Quantitative Recovery of Bacteriophage Used for Disinfection Equipment Validation" (Revision 35, July 5, 2017). This document is reviewed and revised as needed by the GAP Quality Manager and Laboratory Manager on an annual or more frequent basis. The documents are provided in Appendix C of this validation report.

3.4 COLLIMATED BEAM APPARATUS

The dose-response of the bacteriophage in the seeded reactor inlet samples was measured by GAP using a collimated beam apparatus equipped with a low-pressure mercury arc lamp. Irradiations were conducted in duplicate on 10 mL sub-samples taken from the inlet sample. Bacteriophage sub-samples were irradiated at UV dose values ranging from 0 to 255 mJ/cm^2, depending on the test organism. Irradiated sub-samples and controls were assayed as per Section 3.3. The standard operating procedure for the collimated beam analysis is provided in Appendix D of the validation report. Irradiance was measured by GAP using the average of four radiometers supplied by International Light Technologies, Inc. (see Table 3.1).

Table 3.1 UV Radiometers and Detectors Used by the Microbiology Lab

Radiometer	Detector	Filter	Input Optic	Manufacturer
IL1700 #4246	SED240 #5488	QNDS2 #22469	W #9854	International Light
IL1700 #5296	SED240 #6497	QNDS2 #29167	W #12831	International Light
ILT1400A #8719	SEL240 #6498	NS254 #28012	TD #28814	International Light
X9-11 #12568M	UV-3718-4 #22603			Gigahertz Optik

3.5 THIRD PARTY OVERSIGHT

Carollo Engineers conducted biodosimetry testing under the supervision of Ms. Traci Brooks and/or Mr. Mark Heath. Dilution and injection of phage working stocks was conducted by Ms. Traci Brooks. Sampling of challenge organisms was conducted by Ms. Traci Brooks, Mr. Tyler Kane, Ms. Khalida Hassan of ATG, and/or Mr. George Foster of ATG. GAP prepared all stock solutions of the challenge microbes (MS2 or T1UV), measured challenge microbe dose responses using the collimated beam apparatus, and assayed challenge microbe concentrations under the supervision of Mr. Shawn Verhoeven. Mr. George Foster or Ms. Khalida Hassan operated the UV reactor with oversight by Carollo. Data analysis was conducted by Ms. Traci Brooks and Mr. Tyler Kane and reviewed by Mr. Harold Wright of Carollo Engineers.

METHODS

4.1 WATER QUALITY MEASUREMENTS

Water quality measurements conducted on-site included UV transmittance (UVT) at 253.7 nm and total chlorine. Measurements, sample collection time, and information relating the measurements to test conditions were manually recorded in a dedicated logbook.

4.1.1 UVT Measurements

The UVT of the test water was measured at 253.7 nm using a DR5000 UV-VIS spectrophotometer (Hach Company, Loveland, CO) and a REAL UV254 P-Series handheld spectrophotometer (Real Tech Inc. Ontario, Canada equipped with a 4-cm cell pathlength). Prior to a measurement, the spectrophotometer was zeroed using a 1-cm or 4-cm cuvette filled with distilled water. The cuvette was then rinsed three times with the test water, filled with the test water, and wiped dry. The cuvette was then placed inside the spectrophotometer and the measurement was initiated. Measured UV absorbance, sample collection time, and information relating the measurement to the test conditions were manually recorded in the logbook.

4.1.2 Total Chlorine

During biodosimetric testing, the concentration of chlorine in the test train source water was analyzed multiple times throughout the day. Water samples were taken in plastic sample vials and analyzed within two minutes of collection using a Hach DR700 pocket colorimeter. This method is equivalent to USEPA method 330.5 and Standard Method 4500-Cl G for drinking water and wastewater. The analytical procedure starts by rinsing a 10-mL vial three times with the sample water. The vial was then filled to the 10 mL mark, wiped dry, and placed in the instrument. At this time, the colorimeter was zeroed. A powder pillow containing the required reagent was then opened and poured into the vial. The vial was capped and shaken to ensure adequate mixing. The sample vial was then placed in the colorimeter and the reading was recorded three minutes after mixing.

4.2 UV SENSOR PERFORMANCE

UV sensor performance was assessed using the following three evaluations:

1. Reference UV sensor checks
2. Dependence of UV sensor measurements on ballast power setting
3. Dependence of UV sensor measurements on water UVT

4.2.1 Reference UV Sensor Checks

Measurements made by the on-line UV sensors were checked multiple times throughout validation testing using calibrated reference UV sensors (SUV 20.1 A2 Y2 C) using the following procedure:

1. Record time, water UVT, and lamp power.
2. Record the multiple measurements made by the on-line UV sensor (three readings at 5-second intervals).
3. Replace the on-line UV sensor with each of the reference UV sensors and record at least three consecutive readings after the measurement had stabilized.
4. Return the on-line UV sensor and record multiple measurements (three readings at 5-second intervals).
5. Calculate the average of the multiple measurements taken by each reference UV sensor and the on-line UV sensors. Calculate the average of the three reference UV sensor measurements from the individual averages.
6. Compare by plotting online UV sensor readings versus reference UV sensor readings.

4.2.2 Dependence of Measured UV Intensity on Ballast Power Setting and UVT

The dependence of UV intensity measurements on the ballast power setting was determined using the following procedure:

1. Record time, and water UVT.
2. Adjust ballast power to 100 percent by adjusting the lamp ampere setting to the reactor’s maximum.
3. Record steady state measurements by each UV sensor.
4. Repeat steps 1 to 3 for various lamp ampere settings ranging from 5 to 10 in the WF-125-6 and WF-225-8 reactors, and 5 to 11 in the WF-115-4 reactor.
5. Repeat steps 1 to 4 at different UVTs, adjusted by addition of LSA.

4.3 BIODOSIMETRY

Biodosimetry was conducted using the following procedure:

1. Set the flow rate to the target value by adjusting the flow control valve.
2. Set the water UVT to the target value by adjusting the feed rate of the LSA pump.
3. Set the lamp ampere setting to the target value and wait 5 minutes for the lamps to stabilize.

4. Initiate injection of MS2 or T1UV.
5. Wait for at least 5 residence times to achieve steady state conditions.
6. Manually record flow rate and UV intensity, lamp ampere setting and reactor power consumption (kW).
7. Collect 3 influent and effluent challenge microbe samples spaced twenty seconds apart. Sample volumes were approximately 50 mL.
8. Collect the collimated beam sample (1 to 2 Liters) from the influent sampling port as required.
9. Collect effluent samples for measurement of UV transmittance in parallel with microbial sampling.
10. Manually record flow rate and UV intensity, lamp ampere setting and reactor power consumption (KW).

All sample vials were pre-labeled before testing in accordance with the test plan. Steps in the test sequence were recorded either in the data logbook or on data sheets. All microbiological samples were stored on ice within a cooler. Samples were shipped by overnight courier at the end of each working day for analysis of challenge microbes UV dose-response.

4.4 QUALITY ASSURANCE AND QUALITY CONTROL

All biodosimetric testing was conducted per a previously defined test plan agreed to by Carollo Engineers and ATG. The test plan was defined by a table listing test condition identification numbers and test conditions including flow rate, UVT, and ballast power levels. Carollo and ATG each had copies of the test plan during testing that they used to confirm the conditions of each test run prior to sampling. Carollo Engineers was responsible for initiating all steps associated with conducting a given test. ATG confirmed those conditions using their copies of the test plan. A typical sequence of events included, in chronological order, setting the flow rate, UVT, and the UV reactor operation, then initiating challenge microbe injection, and water sampling. Steady state for each step was confirmed by Carollo Engineers before the next step was initiated. Carollo synchronized inlet and outlet sampling by communicating a request to sample to the personnel collecting samples. All events were recorded by the computer data log and manually in the sample data sheets.

At the beginning of each day, several procedures were initiated to ensure consistency throughout the validation period. These included verification of the absence of chlorine in the test water used to prepare the bacteriophage concentrations and assessment of the stock de-ionized water UVT with organic free water (Hach, Loveland, CO). In addition, other procedures as described in this section were performed throughout testing to assess water quality, test train stability and reactor performance.

4.4.1 UV Spectrophotometer Calibration Check

UV spectrophotometer UV absorbance and wavelength accuracy was checked, respectively, using potassium dichromate, holmium oxide, and far UV rare earth standards (Starna Cells, Inc, Atascadero, CA) before each day of testing.

The potassium dichromate standard consisted of two cuvettes. One cuvette contained a 20 mg/L solution of potassium dichromate with known UV absorption coefficients at 350 nm, 313 nm, 257 nm, and 235 nm, traceable to National Institute of Standards and Technology (NIST) primary standards. The other cuvette contained a zero absorbance solution (blank). The blank solution was used to zero the spectrophotometer prior to measuring the absorption coefficient of the standard. The UV absorption coefficients of the standards measured with the Hach DR 5000 are included in Appendix E.

The holmium oxide and rare earth standard consisted of cuvettes containing solutions of holmium oxide or rare earth with absorbance peaks that occur at known wavelengths traceable to NIST primary standards. A table of the peaks from the holmium oxide and rare earth standard scans are included in Appendix E.

During each day of testing, the RealTech UVT analyzer was checked with a potassium dichromate secondary standard prepared on site from reagent grade potassium dichromate powder to an approximate absorbance 0.27 AU as determined by the DR5000 spectrophotometer set at 253.7 nm. The absorbance of the secondary standard was measured in the RealTech analyzer.

4.4.2 Flowmeter

Flow meter accuracy at the Portland Validation Facility has been verified since October 2005 by comparisons of readings made by different flow meters, by “bucket tests” at low flow rates, and by drawdown tests using the 2-million gallon groundwater storage tank located on-site. The comparison report is provided in Appendix F. In addition, the 12-inch flow meter and the 4-inch flow meter used during testing were compared against each other for additional confirmation of their accuracy. This report is also provided in Appendix F.

4.4.3 Microbial Controls and Blanks

Microbial QA/QC included collection of control and blank samples during validation testing, trip controls and method blanks, and the evaluation of the stability of the challenge microorganisms. Control samples were influent and effluent samples collected with MS2 or T1UV injection on, and the UV reactor off. Blank samples were influent and effluent samples collected with the UV reactor lamps on, halting bacteriophage or spore injection, flushing the system with groundwater for a period corresponding to five residence times of the system (injection loop, inlet piping, reactor and outlet piping). Trip controls were sent from GAP with the phage stock and returned with the samples on each day of testing.

Method blanks consisted of lab dilution water that was assayed for test microbe concentrations.

4.4.4 Microbial Stability

Influent and effluent samples for several test conditions were randomly sampled for temporal stability analysis of MS2 and T1UV concentrations used with validation. The samples were stored at 4°C and the concentrations were periodically measured over time. Results of the microbial stability tests are presented in Appendix A.

4.4.5 Steady State Conditions

Steady-state conditions of flow rate, UVT, UV system operation, and challenge microbe concentration were confirmed prior to sampling.

Steady-state flow rate essentially occurred immediately after the flow control valves were adjusted to the desired flow rate. Once the flow rate was set, it typically held constant with a standard deviation less than 1 percent.

The target UVT was typically reached after one to three iterative settings of the LSA pump speed. Steady-state was confirmed by collecting three water samples from the effluent sampling tap spaced at least one minute part and confirming that the average UVT was within 0.3 percent of the target value. Once the target UVT was reached, the value typically remained stable over multiple test conditions without the need for readjustment.

The spectrophotometer's zero-absorbance value was checked at the end of each set of transmittance measurements by measuring the UV transmittance of the distilled water. If the UV transmittance of the distilled water deviated by more than 0.2 percent from 100 percent, the spectrophotometer was re-zeroed and the UVT of the samples was re-measured. In a few cases, slight changes in raw water quality caused a drift in the UVT of the water. In that case, the LSA injection rate was adjusted to compensate and the measurements were repeated. All errors and diagnostics were recorded in the logbook.

Steady state operation of the UV lamps was evaluated by observing UV intensity displayed at the PLC following changes in lamp on/off status or power setting. Typically, steady state for the lamps was reached within 5 minutes of adjusting lamp power or of turning on the lamps.

Steady state challenge microbe concentrations were assumed to occur after a time period equal to 5 theoretical residence times plus an additional 30 seconds to account for period from the gear pump injection point to the effluent sampling point.

RESULTS

Functional testing of the ATG WF-115-4, WF-125-6, and WF-225-8 UV reactors was conducted on April 18, 2019. Biodosimetric validation was conducted on January 8, 9, 16, 2019, and March 12, 13, 14, 19, 2019.

5.1 WATER QUALITY

The source water used during functional and biodosimetric testing was groundwater, with a UVT greater than 99.0 UVT and non-detectable chlorine concentrations (all measurements were at or below the detection limit of 0.02 mg/L).

5.2 ELECTRICAL POWER CONSUMPTION

The power consumption to the ATG WF-115-4, WF-125-6, and WF-225-8 UV reactors was monitored using a Fluke 434 power quality analyzer, calibration certificates for which are provided in Appendix F. Figure 5.1 presents the UV reactor power consumption as a function of the lamp amperes. Table A.1a in Appendix A reports the reactor power consumption and power factor data for each reactor. The relationship between reactor power consumption (P, kW) and lamp amperes (P_L, A) is described in Equation 5.1a, 5.1b, and 5.1c for the lamps in the WF-115-4, WF-125-6, and WF-225-8 UV reactors, respectively:

$$\mathrm{P} = 0.0768 \times \mathrm{P_L}^{1.2966}$$ **Equation 5.1a**

$$\mathrm{P} = 0.1639 \times \mathrm{P_L}^{1.2022}$$ **Equation 5.1b**

$$\mathrm{P} = 0.2812 \times \mathrm{P_L}^{1.2630}$$ **Equation 5.1c**

The WF-115-4 reactor had a maximum lamp ampere setting of 11. The WF-125-6 and WF-225-8 both had a maximum lamp ampere setting of 10. Each equation fit the data with an R-squared of at least 0.9918. The power factor is calculated as the ratio between the apparent power (kVA) and true power (kW) measured for the total system consumption, where apparent power is product of the current (Amps) and voltage (V) measured from the main power lines to the UV system. The power factors ranged from 0.802 to 0.971 for the WF-115-4, 0.429 to 0.884 for the WF-125-6, and 0.416 to 0.935 for the WF-225-8.

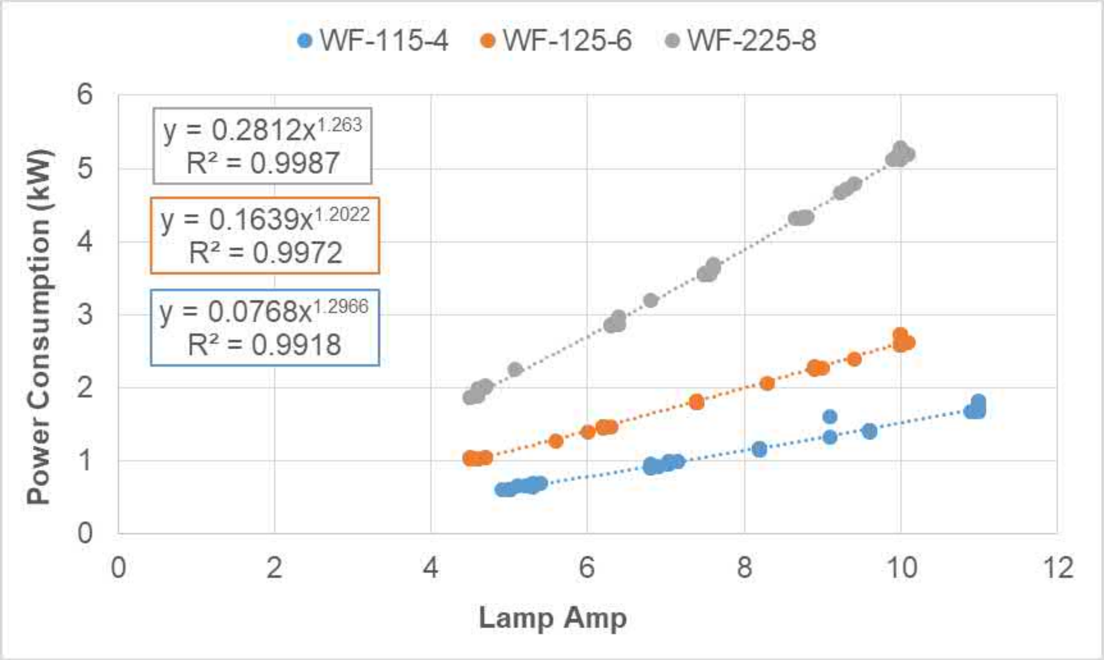

Figure 5.1 **UV Reactor Power Consumption Measured by the Fluke 434 Power Quality Analyzer as a Function of the Ballast Power Setting**

5.3 UV SENSOR PERFORMANCE

The performance of the UV sensors was validated during functional and biodosimetric testing by comparing duty and reference UV sensor readings at various water UVT and lamp ampere settings, and by defining the dependence of UV sensor readings on lamp ampere setting and water UVT. The UV sensor port window and quartz sleeves were chemically cleaned with CLR Calcium, Lime, and Rust Remover before testing. Table 5.1 provides serial numbers for the reference UV sensors.

Table 5.1 UV Reference Sensor Information

UV Sensors	Reference Sensor 1	Reference Sensor 2	Reference Sensor 3
Serial Number (150W sensors)	YN 109	XD 062	X4 034
Serial Number (300W sensors)	D8 126	D9 076	D9 080

5.3.1 Reference UV Sensor Calibration

The reference UV sensors were tested for linearity and calibration at uv-technik Speziallampen GmbH in Wolfsberg, Germany. Appendix B provides the calibration reports prepared by the uv-technik.

5.3.2 Reference UV Sensor Checks

The reference UV sensors were used to check the accuracy of the duty UV sensors. The test water UVTs ranged from 67.8 to 99.5 percent and the lamp ampere setting ranged from 4.5 to 11. Figure 5.2 shows the comparison between the average reference UV sensor reading and the average duty UV sensor reading for each reference sensor check. The relationship between the duty and reference UV sensor readings had a slope of 1.0383. The residuals had an average and standard deviation of -1.34 and 2.42 percent, respectively, and ranged from -6.34 to 1.31 percent. All differences were within the 10 percent criteria for reference UV sensor checks given in the 2006 UVDGM. The reference and duty UV sensor data used for the analysis are presented in Appendix A.1b. The duty sensor readings in this report were not adjusted based on the comparison of duty and reference UV sensor readings.

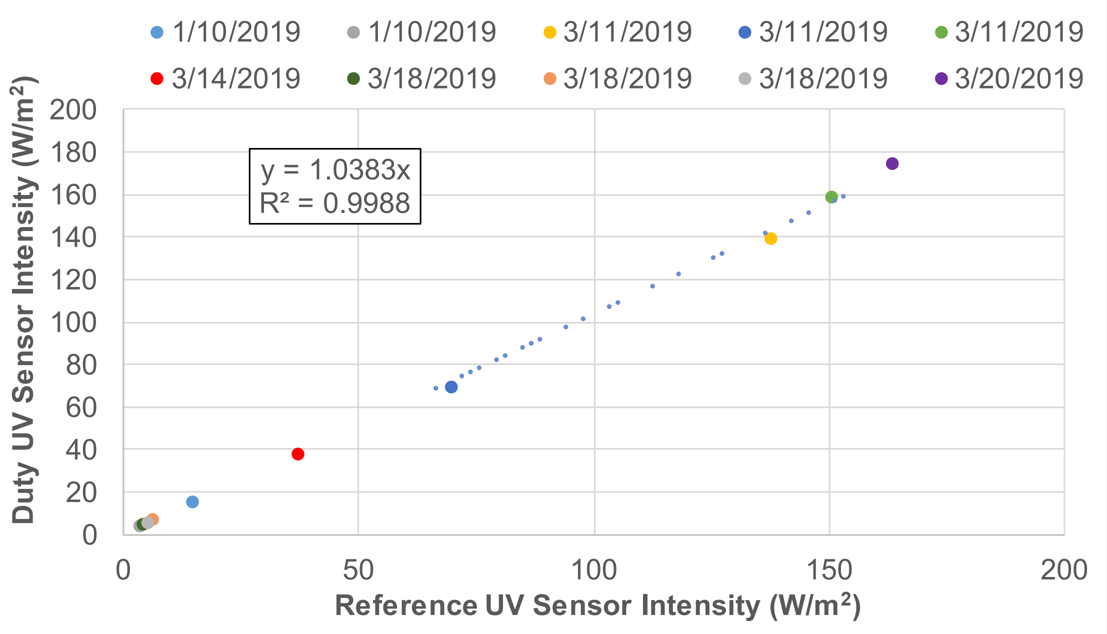

Figure 5.2 **Relationship between All Reference and Duty UV Sensor Measurements Obtained during the WF-115-4, WF-125-6, and WF-225-8 Reactor Validations**

5.3.3 UV Intensity as a Function of Ballast Power Setting and UVT

Functional testing was performed to determine the dependence of the UV sensor reading on UVT and lamp ampere setting for each reactor.

The UV sensor equation developed is described by Equation 5.2:

$$S = 10^A \times {P_L}^B \times (UVA - C)^D$$ **Equation 5.2**

where S is UV sensor intensity (W/m^2), UVA is the UV absorbance per cm of the test water at 254 nm, P_L is lamp ampere setting (A), and A through D are empirical coefficients provided in Table 5.2.

Figures 5.3a, 5.4a, and 5.5a show the relation between the measured and predicted UV sensor readings using the coefficients provided in Table 5.2 for the WF-115-4, WF-125-6, and WF-225-8 UV reactors, respectively. Figures 5.3b, 5.4b, and 5.5b present the residuals as a function of the predicted UV intensity for the WF-115-4, WF-125-6, and WF-225-8 UV reactors, respectively. The relative residuals were calculated as the difference between the measured and predicted UV sensor readings divided by the predicted UV sensor reading. The average of the residuals was -0.02 percent, -0.06 percent, and -0.04 percent for the WF-115-4, WF-125-6, and the WF-225-8, respectively. The standard deviation of the residuals was 1.42 percent, 2.58 percent, and 1.99 percent for the WF-115-4, WF-125-6, and the WF-225-8, respectively. The R-squared values of the relations ranged from 0.9989 to 0.9991. The analysis shows that Equation 5.2 accurately predicts the UV sensor readings. The equation should only be used for interpolation within the bounds of the measured data set (UVT from 64.1 to 99.5 for the WF-115-4, 64.9 to 99.6 for the WF-125-6, and 66.3 to 99.8 for the WF-225-8; lamp ampere setting from 5.0 to 11.0 for the WF-115-4 and 5.0 to 10.0 for the WF-125-6 and WF-225-8).

Table 5.2 UV Sensor Equation Coefficient Values (Equation 5.2)

Constants	WF-115-4	WF-125-6	WF-225-8
A	17.202	-3.2676	-1.5978
B	1.5144	1.4761	1.5282
C	-3.8897	-0.20198	-0.11559
D	-27.891	-5.4742	-2.5972
100% lamp power	11 Amperes	10 Amperes	10 Amperes

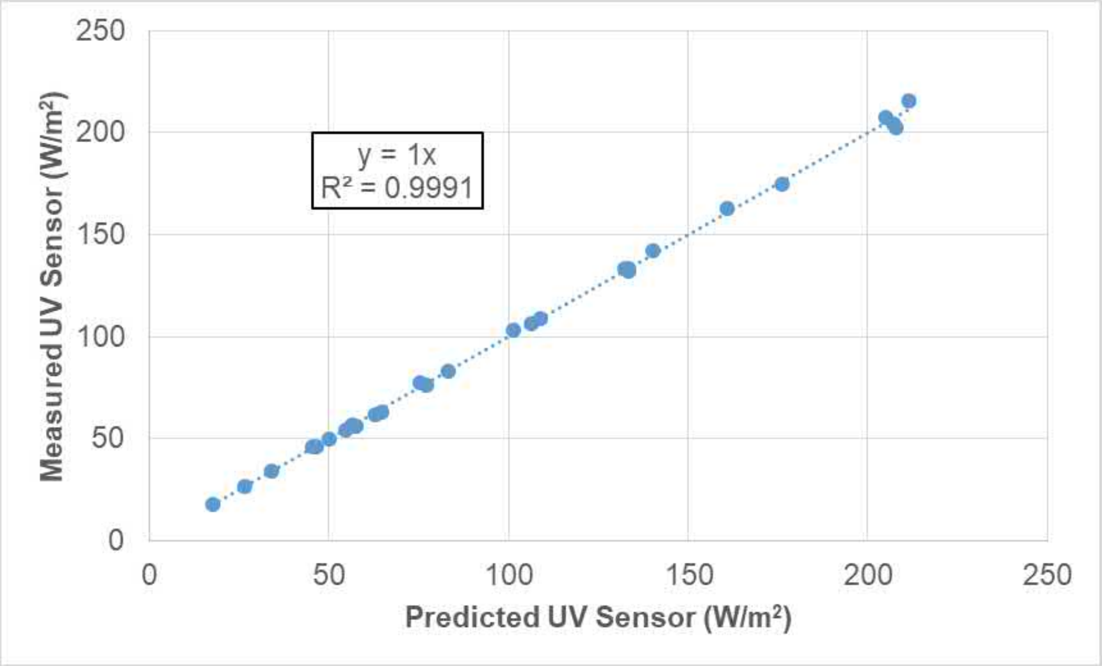

Figure 5.3a Relation between the Measured and Predicted UV Intensities for the WF-115-4 Reactor

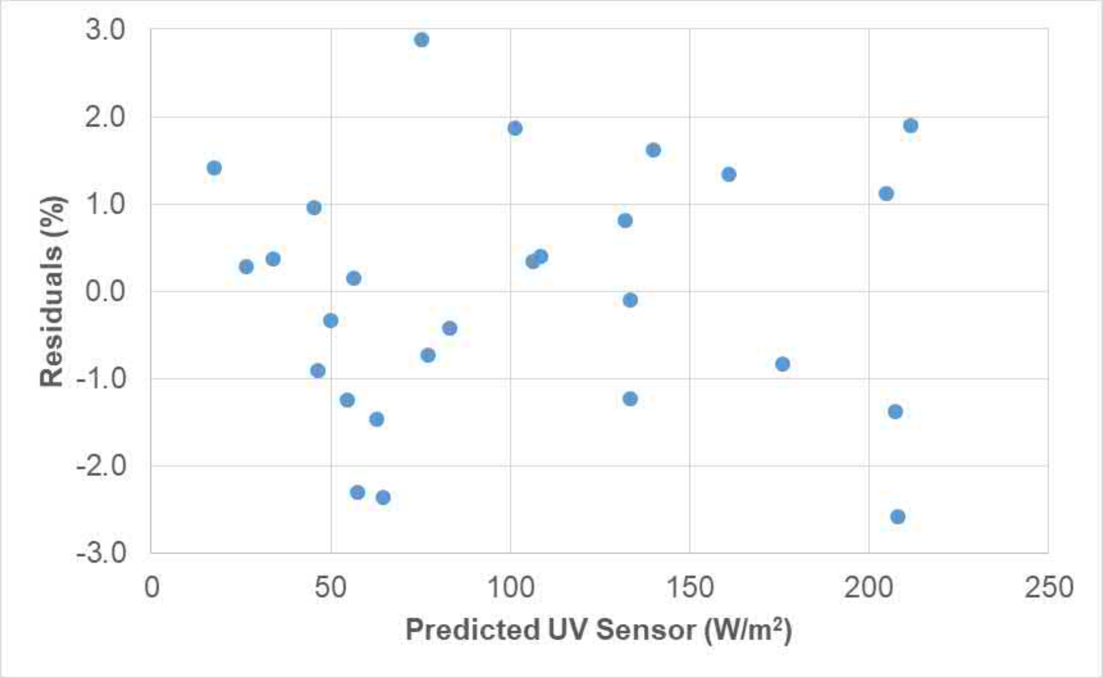

Figure 5.3b Prediction Residuals versus Predicted UV Sensor Readings for the WF-115-4 Reactor

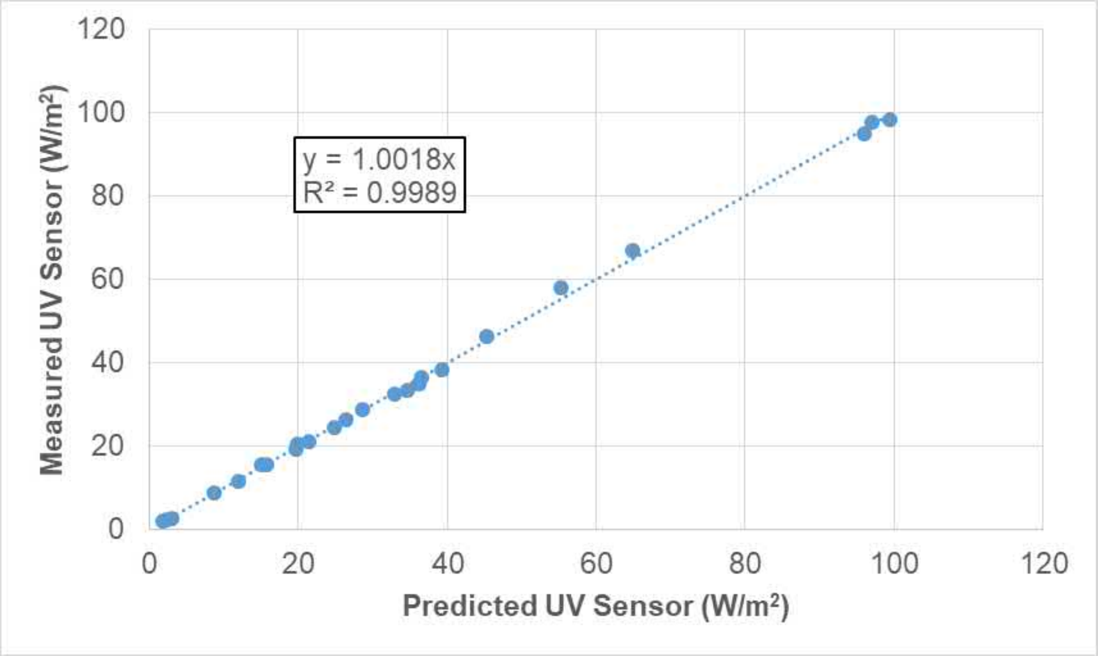

Figure 5.4a Relation between the Measured and Predicted UV Intensities for the WF-125-6 Reactor

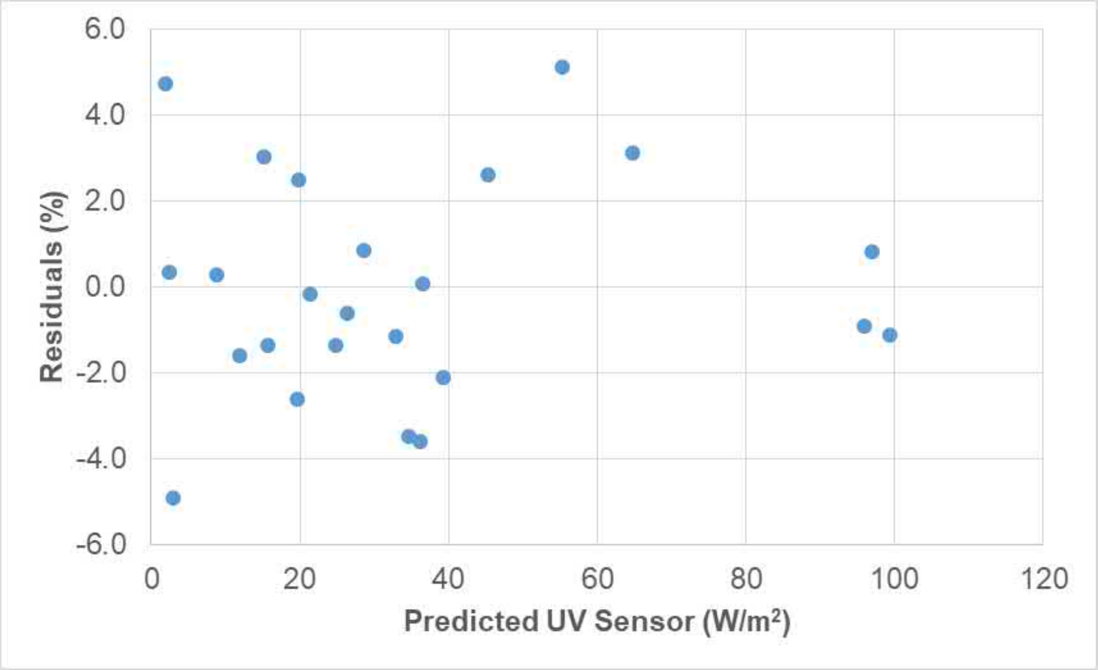

Figure 5.4b Prediction Residuals versus Predicted UV Sensor Readings for the WF-125-6 Reactor

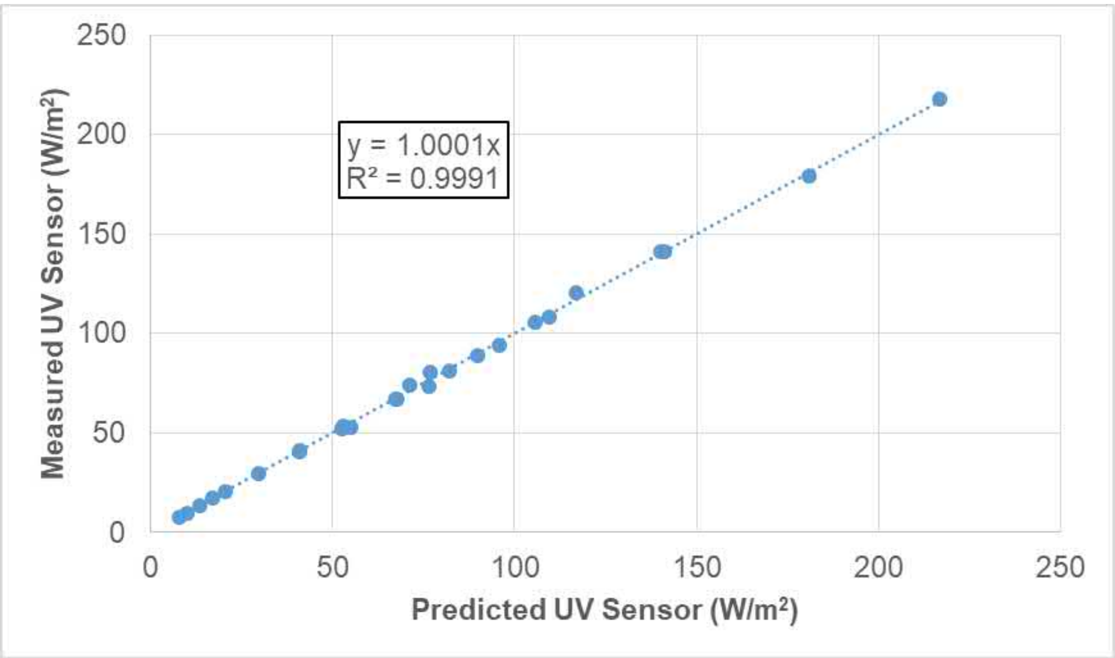

Figure 5.5a Relation between the Measured and Predicted UV Intensities for the WF-225-8 Reactor

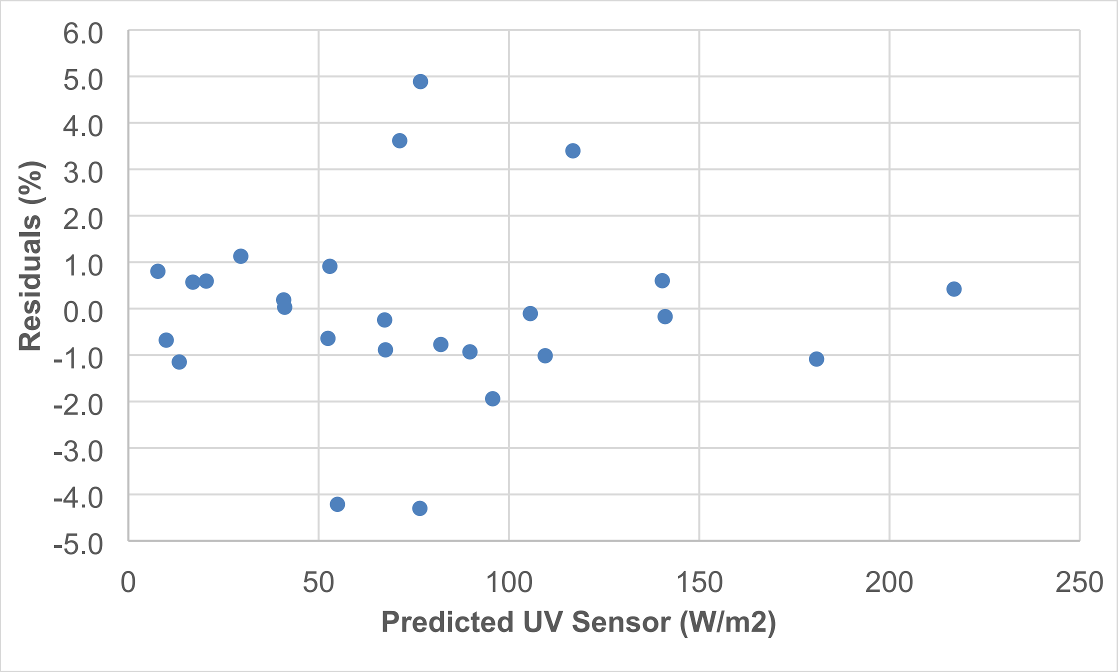

Figure 5.5b Prediction Residuals versus Predicted UV Sensor Readings for the WF-225-8 Reactor

5.3.4 Relative Lamp Output

The relative UV output from the lamps, accounting for lamp aging, fouling, and lamp ampere setting, can be determined by calculating the ratio S/S_0 where S is the measured UV intensity and S_0 is the UV intensity predicted by Equation 5.2 with lamp ampere setting, P_L, set to the maximum for the reactor (11 for the WF-115-4 and 10 for the WF-125-6 and WF-225-8). If the lamp ampere setting is at its maximum and the lamps are new, operating within clean quartz sleeves, being monitored by a calibrated UV sensor through a clean UV sensor port window, then the value of S/S_0 should be 1.0. If the lamps are aged or operating with a power setting less than their maximum lamp ampere setting, or if the reactor is fouled, the value of S/S_0 should be less than 1.0. The underlying assumption of the meaning of S/S_0 is that the UV sensor readings used to develop Equation 5.2 were obtained with new lamps operating within a clean, unfouled reactor. With no lamp aging and fouling, the ratio S/S_0 can be estimated using Equation 5.3a for the WF-115-4 reactor, and 5.3b for the WF-125-6 and WF-225-8 reactors.

$$\frac{S}{S_0} = \frac{{P_L}^B}{11^B}$$ **Equation 5.3a**

$$\frac{S}{S_0} = \frac{{P_L}^B}{10^B}$$ **Equation 5.3b**

Figure 5.6 shows the predicted relative lamp output as a function of the lamp ampere setting. At a maximum lamp ampere setting, the relative lamp output has a value of 1.0. At a lamp ampere setting of 5, the relative lamp output has a value of 0.303, 0.359, and 0.347 for the WF-115-4, WF-125-6 and WF-225-8, respectively.

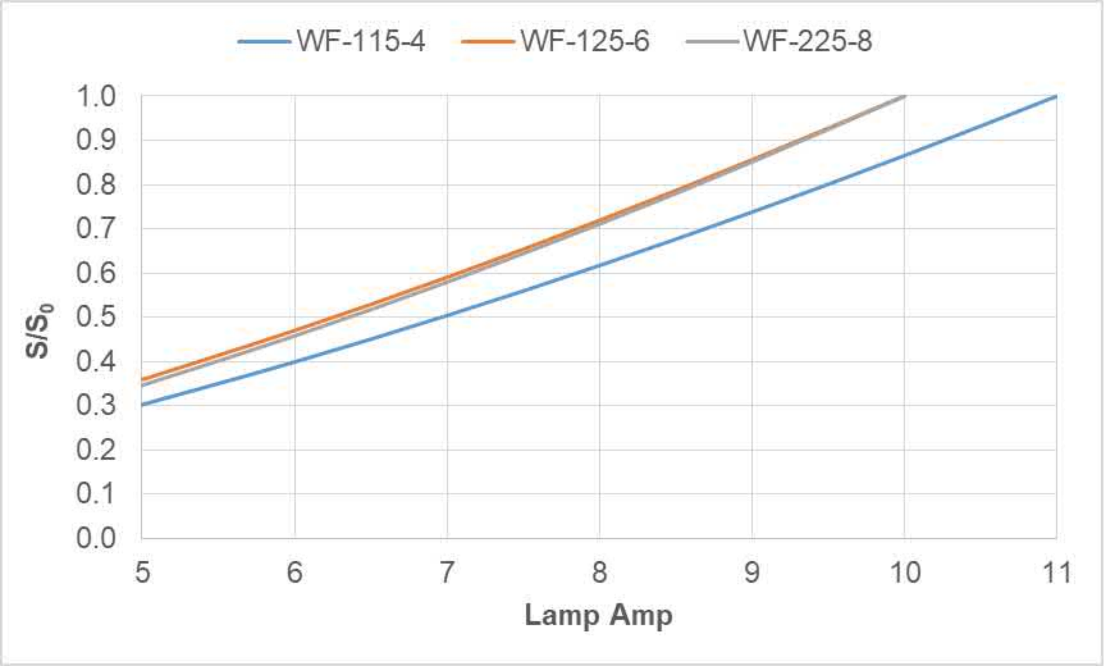

Figure 5.6 **Relative Lamp Output as a Function of Ballast Power Setting Predicted by Equation 5.3**

5.4 BIODOSIMETRY

Biodosimetric validation was conducted on January 8, 9, 16, 2019, and March 12, 13, 14, 19, 2019 using MS2 and T1UV phage. Log inactivation and RED was evaluated as a function of flow, UVT, and lamp ampere setting using 26 biodosimetric test conditions for the WF-115-4, 26 biodosimetric test conditions for the WF-125-6, and 23 biodosimetric test conditions for the WF-225-8. Measured data is provided in the appendices of this report as follows:

• Table A.1a	UV System Power Consumption
• Table A.1b	Duty UV Sensor vs Reference UV Sensor Check
• Table A.1c	Functional Sensor Testing: UVT, Ballast Power, and UV Sensor Intensity Readings
• Table A.2	Test Conditions for Bioassay Testing
• Table A.3	Sample Replicates for UVT Measurements
• Table A.4a	Data Collected to determine UV Dose-Response
• Table A.4b	Collimated Beam UV Dose Calculations
• Table A.4c	Comparison of N_0 with UVDGM method
• Table A.4d	Measured and Predicted UV Doses and Prediction Residuals from Collimated Beam Analyses
• Table A.5	Biodosimetry Test Results
• Table A.6	Biodosimetry Data Analysis.

Biodosimetry QA/QC data, including controls and blanks, bacteriophage sample reproducibility, and bacteriophage stability, is included in Appendix A as well. Appendix A also contains a discussion of collimated beam dose calculation uncertainty.

5.4.1 Challenge Microbe UV Dose-Response

The UV dose-response of MS2 and T1UV phage was measured using the sample with the highest influent concentration of the microbes used for testing each day. The dose-response data was fit using the following approach:

1. For a given UV dose exposure, calculate the average of the replicate plate counts and take its log transformation. If any replicate had zero plate counts, calculate the log transform of the average of the plate counts with all replicates. If all replicates had zero plate counts, discard the data.

2. Calculate the zero-dose log concentration of the target microbe (N_o) by averaging the two observed zero-dose log concentrations of phage.

3. Calculate the log inactivation values. $\log i = \log N_o - \log N$. Plot the dose values against log i. Identify the regression equation that best fit the dose-response data. For the MS2 and T1UV phage dose-response data, the intercept was not statistically significant and the regression functions were forced through the origin (0, 0). The dose-response of MS2 and some T1UV phage showed curvature and was best fit using a quadratic function:

   $$Dose = A \times (\log i) + B \times (\log i)^2$$ **Equation 5.4a**

   The dose-response of some T1UV phage did not show curvature and was best fit using a linear function:

   $$Dose = A \times (\log i)$$ **Equation 5.4b**

4. Evaluate the collimated beam data for outliers and remove outlying data points using an iterative process. Identify outliers using a Grubb's statistic outlier test (described in Section 5.4.2). Outliers are identified when the residuals are greater than the product of the Grubb's statistic and the standard deviation of the residuals between the predicted and measured UV dose values.

Figures 5.7 and 5.8 show the UV dose-response data measured for MS2 and T1UV phage, respectively. Figures 5.7 and 5.8 also show the quality control bounds for MS2 and T1UV phage UV dose-response, as described in the discussion in Appendix I.

The fit to the UV dose-response data was within the 95th percentile quality control bounds for the MS2 and T1UV curves.

Tables 5.3 and 5.4 present the results of the regression analysis of the dose response data of MS2 and T1UV phage, respectively. Regression coefficients with MS2 and T1UV phage were significant at a 95 percent confidence level (p-statistic < 0.05). These tables also give the maximum measured log inactivation with each UV dose-response curve and uncertainty of that value defined as a 95th percent prediction interval. The maximum log inactivation is defined as the maximum measured log inactivation plus/minus a 95th percentile prediction interval. The 95th percentile prediction interval was determined using the following approach:

1. Calculate the prediction interval associated with the UV dose predicted using:

$$PI = \left(1 + \frac{1}{n} + \frac{\left(\log i - \log i_{AVG}\right)^2}{\sum_{k=1}^{n}\left(\log i_k - \log i_{AVG}\right)^2} \right)^{1/2} \times t \times \sigma \qquad \textbf{Equation 5.5}$$

   where PI is the prediction interval in units of mJ/cm^2, n is the number of data sets of dose and log inactivation used to define the UV dose response curve, log i is the maximum measured log inactivation with that dataset, log i_{Avg} is the mean value of the measured log inactivation, log i_k is the kth measured log inactivation, t is the Students t-statistic for n-1 degrees of freedom if the dose-response behavior is linear, n-2 degrees of freedom if the dose-response behavior is quadratic, and σ is the standard error of the difference between the predicted and measured dose.

2. Calculate the maximum UV dose as the UV dose (predicted using Equation 5.4 using the maximum measured log inactivation) plus the value of PI calculated in Step 1.

3. Calculate the maximum log inactivation from the maximum UV dose determined in Step 2 using Equation 5.4.

Table 5.3 Results of MS2 Phage Dose-Response Regression Analysis

Test	Date	max log i	+ 95th % PI	Coefficient A		Coefficient B	
		(-)	(-)	Value	p-stat.	Value	p-stat.
101	1/8/2019	4.80	4.88	15.626	1 x10^{-13}	2.0230	3 x10^{-10}
409	1/16/2019	4.69	4.74	15.302	9 x10^{-15}	2.2826	5 x10^{-12}
407	3/13/2019	7.26	7.36	16.351	4 x10^{-17}	2.0129	7 x10^{-15}
617	3/14/2019	7.15	7.28	16.530	6 x10^{-16}	1.7948	6 x10^{-13}
819	3/19/2019	7.48	7.65	14.725	2 x10^{-13}	2.4651	6 x10^{-14}
Average				16.112	8 x10^{-65}	2.0267	3 x10^{-52}

Table 5.4 Results of T1UV Phage Dose-Response Regression Analysis

Test	Date	max log i	+ 95th % PI	Coefficient A		Coefficient B	
		(-)	(-)	Value	p-stat.	Value	p-stat.
416	3/12/2019	5.90	6.09	4.5337	5 x10^{-13}	0.097917	5 x10^{-3}
820	3/19/2019	5.93	6.20	4.8749	2 x10^{-19}	0.00	-
Average				4.5809	7 x10^{-24}	0.077114	3 x10^{-3}

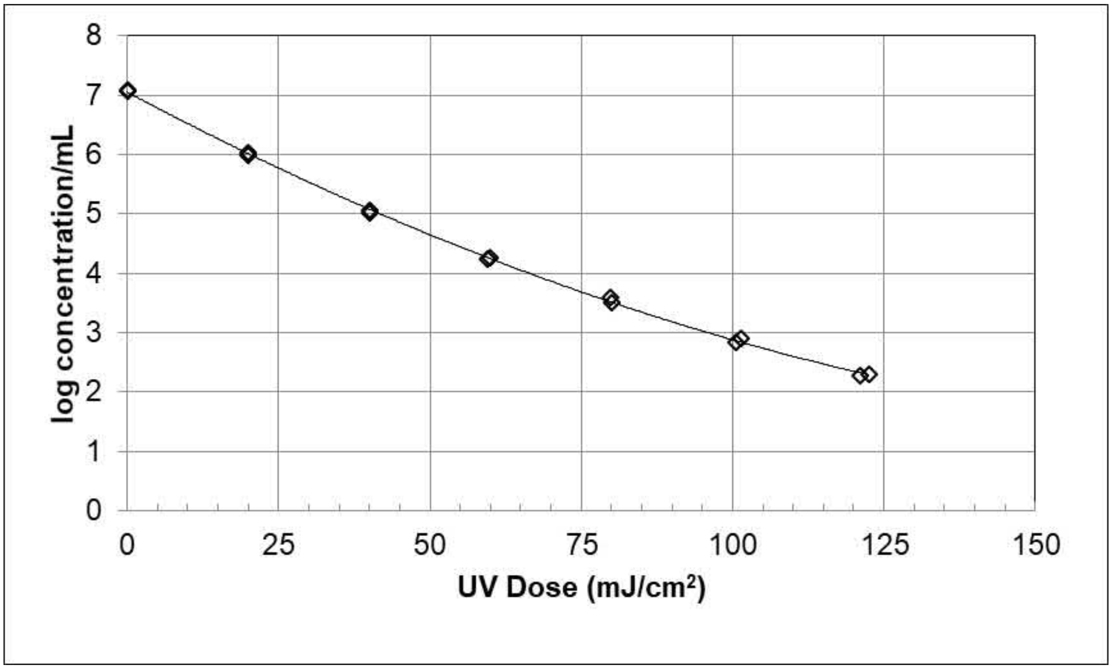

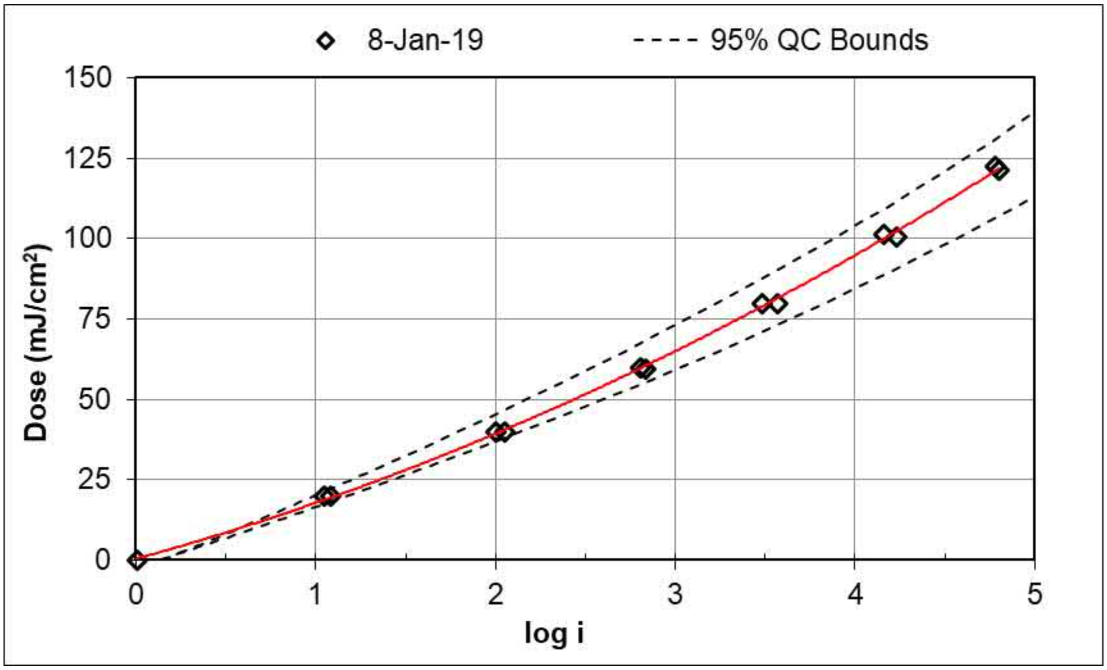

Figure 5.7a UV Dose-Response of MS2 Phage Measured on January 8, 2019

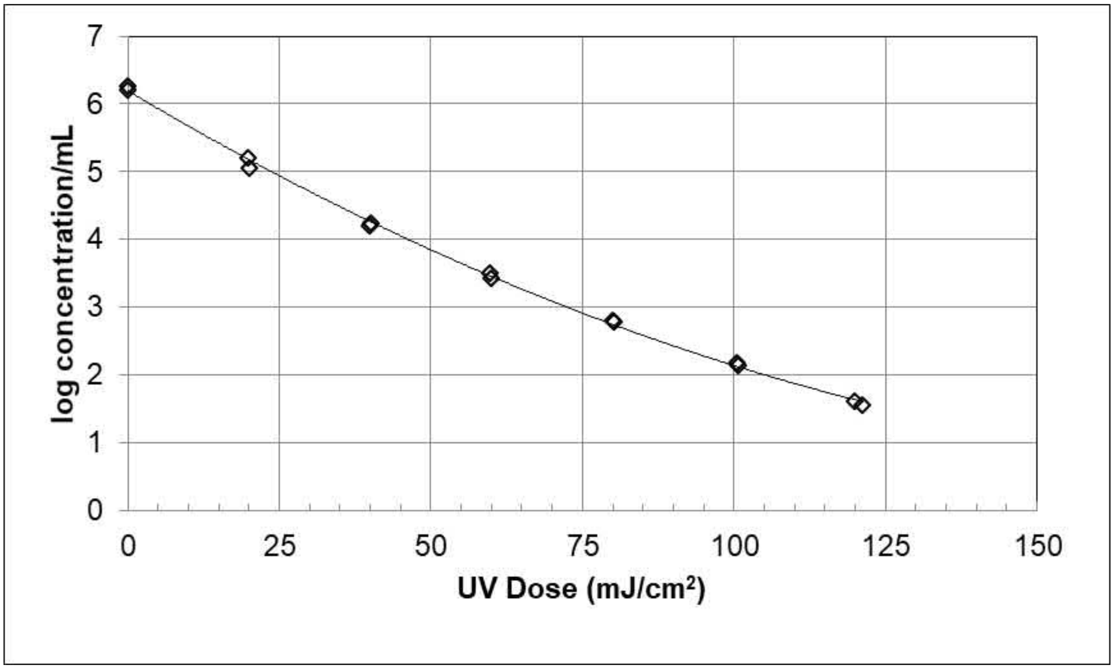

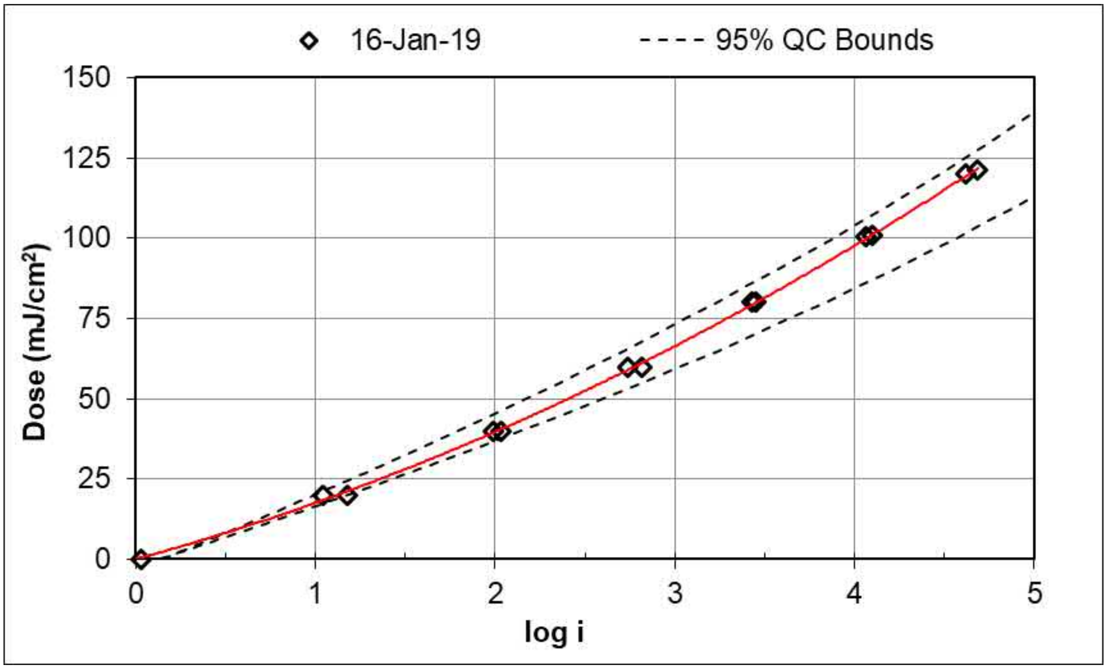

Figure 5.7b UV Dose-Response of MS2 Phage Measured on January 16, 2019

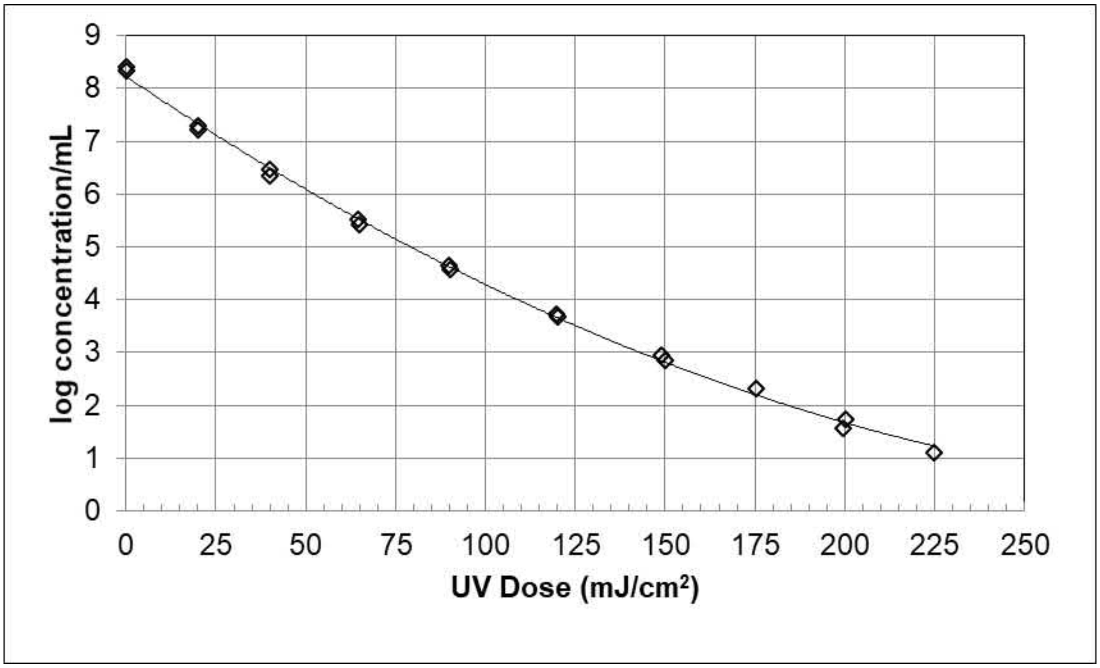

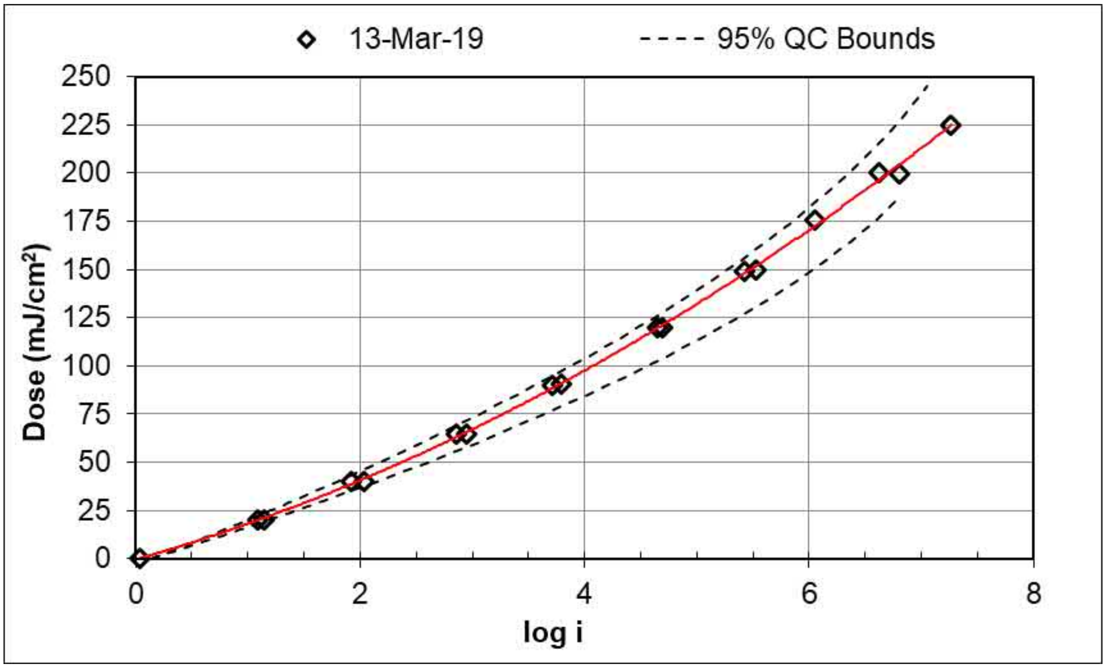

Figure 5.7c UV Dose-Response of MS2 Phage Measured on March 13, 2019

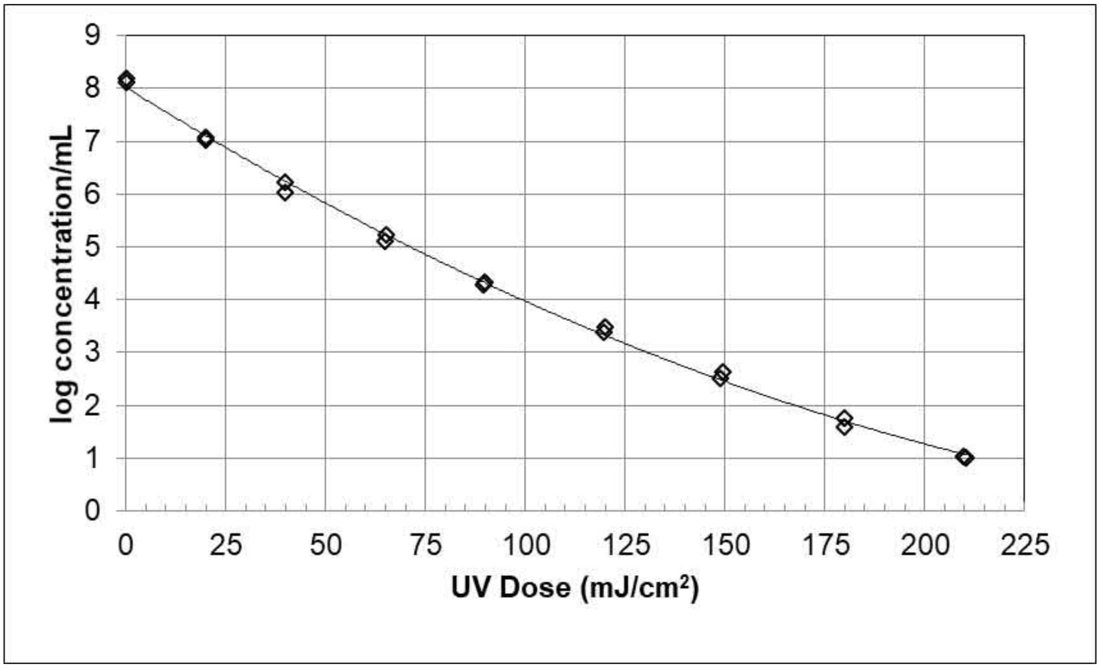

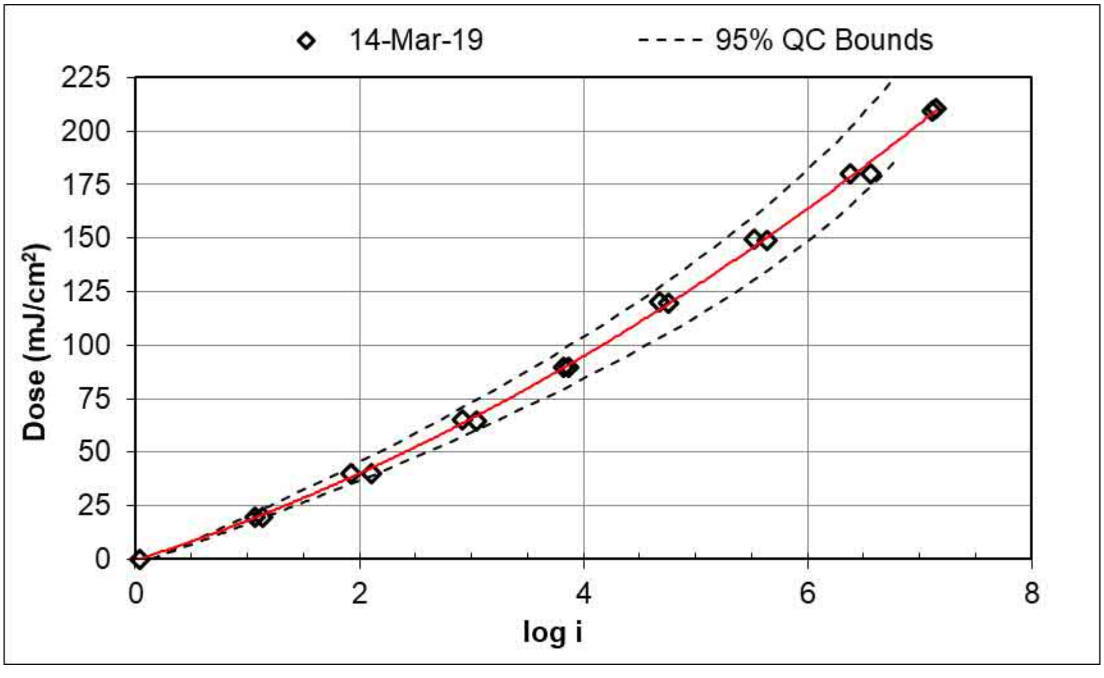

Figure 5.7d UV Dose-Response of MS2 Phage Measured on March 14, 2019

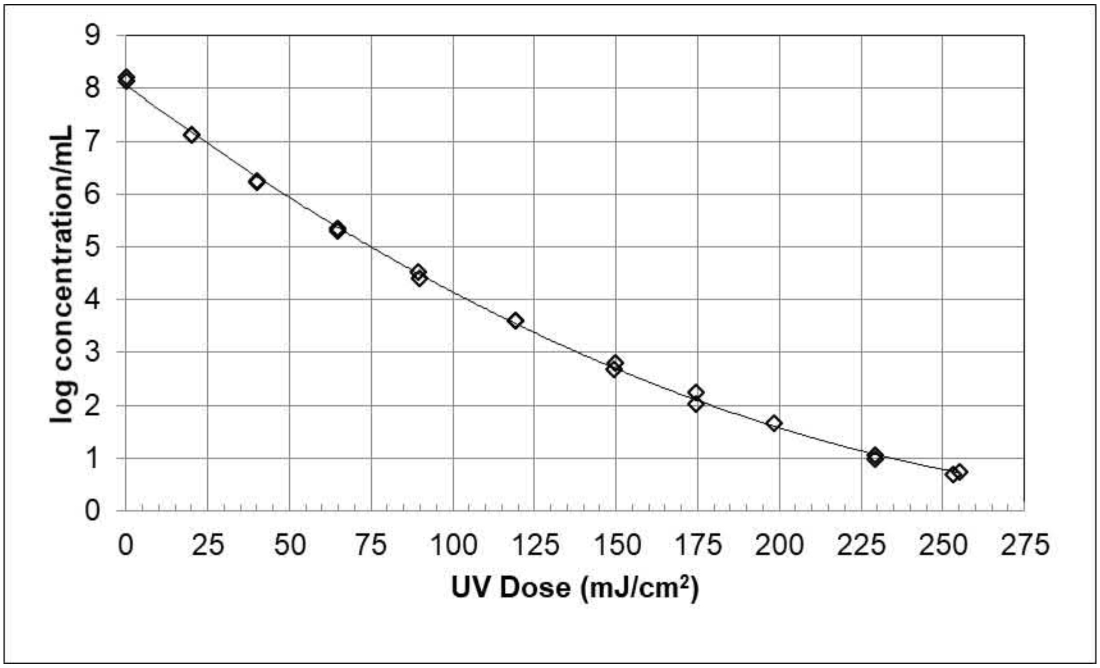

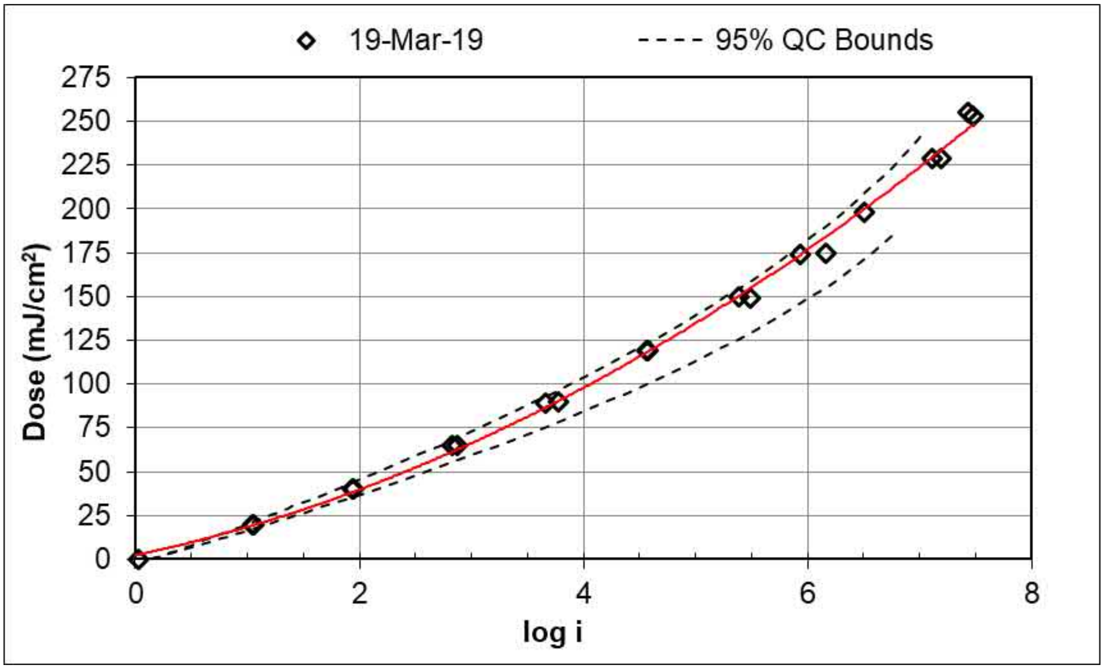

Figure 5.7e UV Dose-Response of MS2 Phage Measured on March 19, 2019

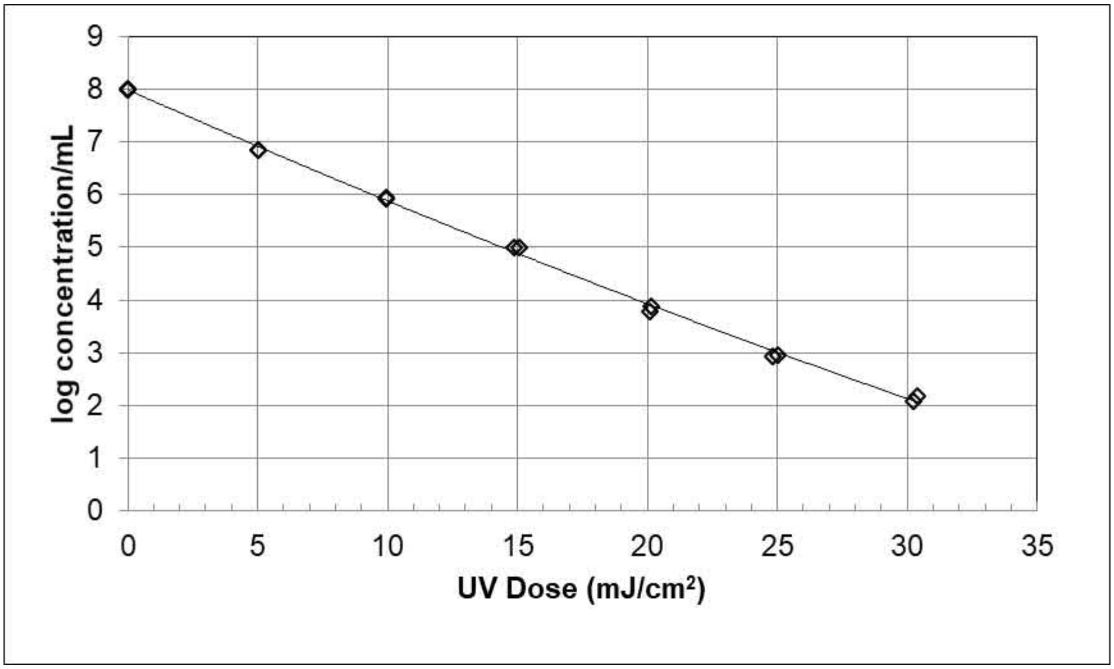

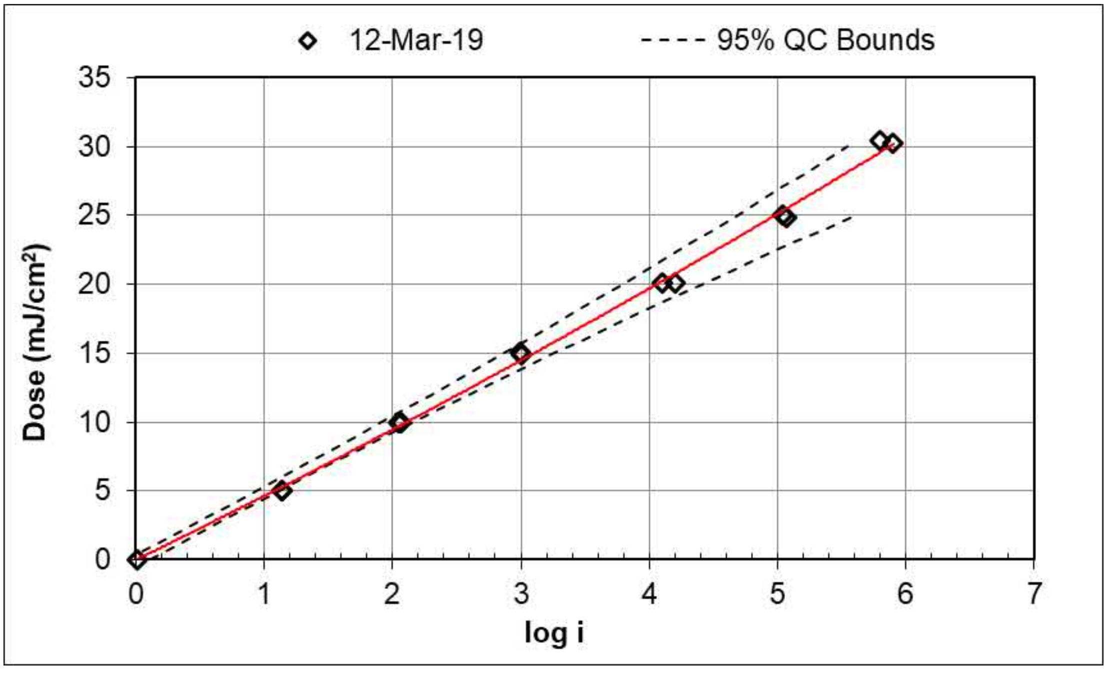

Figure 5.8a UV Dose-Response of T1UV Phage Measured on March 12, 2019

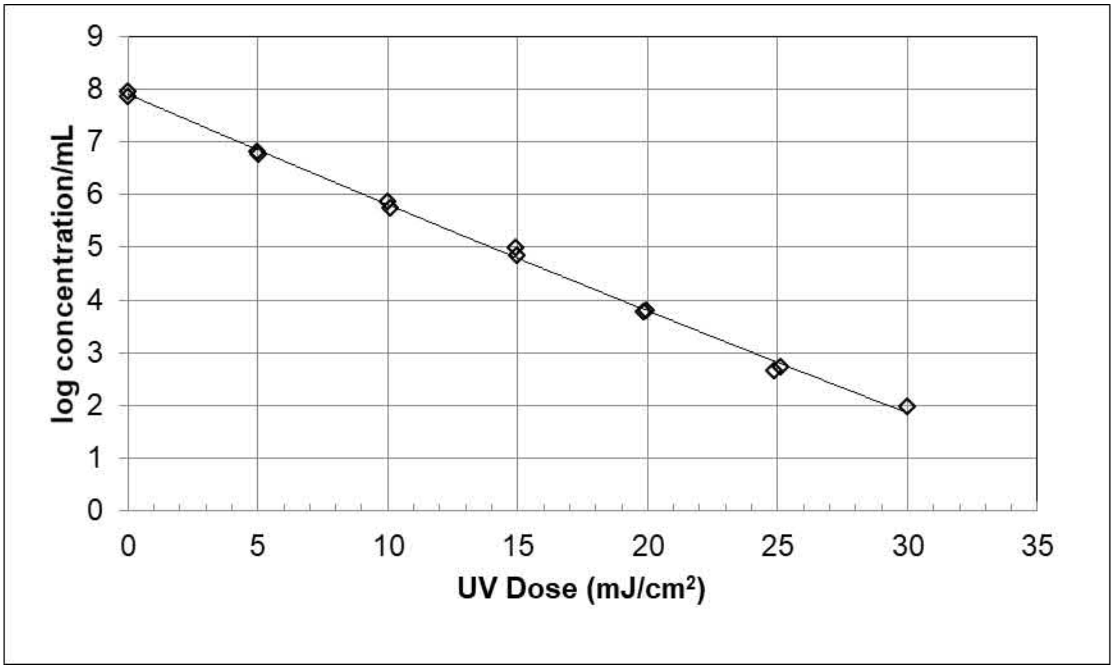

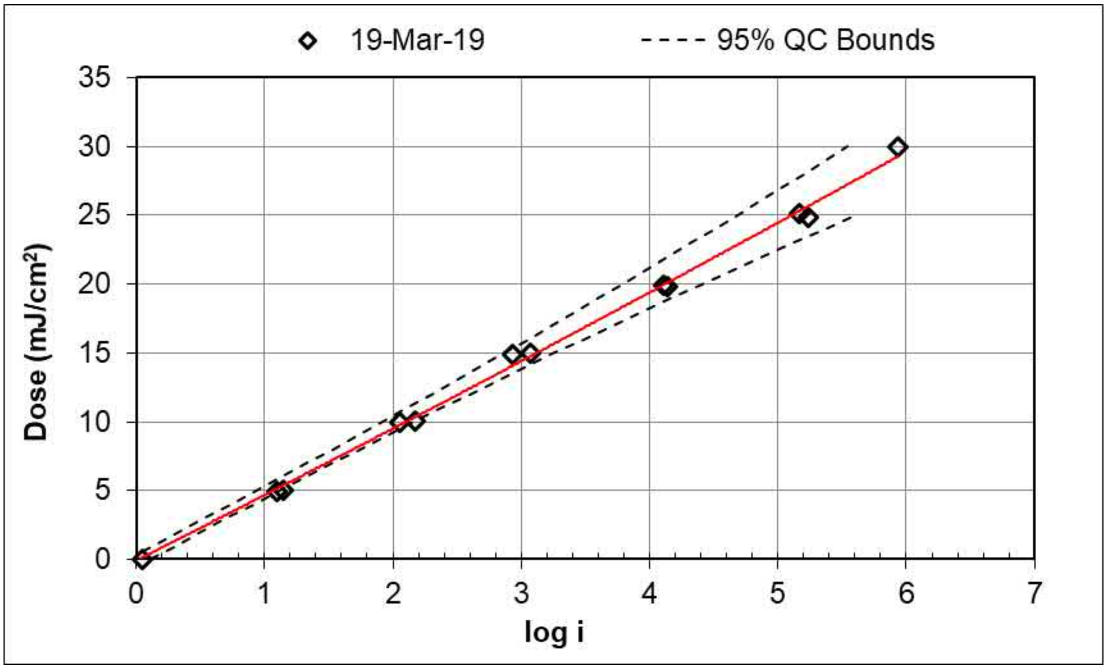

Figure 5.8b **UV Dose-Response of T1UV Phage Measured on April 12, 2017**

5.4.2 Biodosimetry Data Analysis

The log inactivation, log *i*, of tested microbes delivered by the UV reactor can be described using Equation 5.6.

$$\log i\ = 10^{A + B \times UVA} \times UVA^{C + D \times UVA} \times \left(\frac{S/_{S_0}}{Q\ \times\ D_L}\right)^{E + F \times UVA + G \times UVA^2}$$ **Equation 5.6**

where UVA is the UV absorbance at 254 nm (per cm), S is the measured UV sensor value (W/m^2), S_0 is the UV sensor value (W/m^2) calculated using Equation 5.2 with lamp ampere setting to full power, Q is the flow rate (m^3/hr), D_L is the UV sensitivity of the microbe calculated as the UV dose divided by the log inactivation, as defined using the microbe's UV dose-response curve (mJ/cm^2/log), and A through G are constants determined by regression analysis and are presented in Table 5.5.

Table 5.5 Model Coefficients for Equation 5.6 Obtained Using Multivariate Non-Linear Regression

	WF-115-4		**WF-125-6**		**WF-225-8**	
Coefficient	Value	p-statistic	Value	p-statistic	Value	p-statistic
A	2.6794	6 x 10^{-53}	3.5360	7 x 10^{-52}	3.8127	1 x 10^{-53}
B	-2.5083	4 x 10^{-22}	0	-	0	-
C	-0.17837	6 x 10^{-13}	0	-	0	-
D	0	-	11.970	9 x 10^{-24}	9.6997	4 x 10^{-21}
E	0.86151	1 x 10^{-52}	0.88478	2 x 10^{-49}	0.86730	3 x 10^{-52}
F	0	-	-2.0396	2 x 10^{-10}	-1.2419	4 x 10^{-7}
G	0	-	4.8188	2 x 10^{-8}	2.9679	6 x 10^{-5}
R-squared	0.9900		0.9939		0.9969	
St. Dev. of Residuals (log units)	0.18318		0.14416		0.11966	

The biodosimetry test data was fitted to Equation 5.6 using the following approach:

1. Calculate the average flow measured over the duration of each test condition.
2. Calculate the average UVT (per 1 cm path length) measured over the duration of each test condition. Typically, one UVT sample was analyzed with each influent and effluent grab sample used to measure log inactivation. Calculate the average UVA from the average UVT.

3. Calculate the average UV sensor value, S, measured with the UV sensors over the duration of each test condition.
4. Calculate the value of S_0 with each test condition using Equation 5.2 and the coefficients given in Table 5.2. With this calculation, lamp ampere (P_L) in Equation 5.2 was set to full power (11 for the WF-115-4 and 10 for the WF-125-6 and WF-225-8) and UVT was set to the average UVT determined in Step 2.
5. Calculate the relative lamp outputs, S/S_0, using average measured UV sensor reading from Step 3.
6. With each test condition, calculate the log inactivation of each replicate pair of inlet and outlet samples using:

   $$\log i = \log N_i - \log N_e$$ **Equation 5.7**

   where log N_i and log N_e are the log concentrations measured with the influent and effluent samples, respectively.
7. Remove any test conditions where the measured log inactivation is greater than the upper 95th percent prediction interval about the maximum log inactivation used to define the test microbe UV dose-response curve or where the number of plate counts is one or less. The maximum log inactivation and the 95th percent prediction interval are given in Tables 5.3 and 5.4. Since any measured log inactivation within the 95th percent prediction interval is statistically indistinguishable from the maximum log inactivation used to define the test microbe UV dose-response, any data points (T1UV Run 820, replicate A, B, and C, and T1UV Run 812, replicate C) that fell in between the maximum log inactivation and the upper limit of the 95th percent prediction interval were still included in the analysis.
8. Calculate the RED associated with each log inactivation using the UV dose response of the test microbe measured on the same day or within one day of the test condition (i.e., use Equation 5.4 with coefficients in Tables 5.3 or 5.4).
9. Using multi-variate linear regression, fit the biodosimetry data (not including controls) to the linear form of Equation 5.6 for each UV reactor:

   $$log(log\ i) = A + B \times UVA + (C + D \times UVA) \times UVA + (E + F \times UVA + G \times UVA^2) \times log\left(\frac{S/S_0}{Q \times D_L}\right)$$

   Equation 5.8

The UV sensitivity, D_L, is determined using:

$$D_L = \frac{RED}{Log\ i}$$ **Equation 5.9**

where log *i* is the predicted log *i* obtained using Equation 5.6 and RED is the UV dose determined using Equation 5.4. Since the value of D_L depends on the predicted log *i*, the analysis used the Newton Method to iteratively determine the predicted value of log *i* and D_L. The Newton Method for iteratively solving Equation 5.6 defines each iteration as:

$$\log i_{N+1} = \log i_N - \frac{f(\log i_N)}{f'(\log i_N)}$$ **Equation 5.10**

where log i_N is the Nth iteration of log *i*, log i_{N+1} is the next iteration of log *i*, function f is defined as:

$$f = \log i - 10^{A + B \times UVA} \times UVA^{C + D \times UVA} \times \left(\frac{S/S_0}{Q \times D_L}\right)^{E + F \times UVA + G \times UVA^2}$$ **Equation 5.11**

and f' is the derivative of function f with respect to log *i*. The derivative f' was approximated using:

$$f' = \frac{f(\log i_N) - f(\log i_N + \Delta \log i)}{\Delta \log i}$$ **Equation 5.12**

where Δ log *i* is an infinitesimally small change in log *i*.

Substituting Equation 5.12 into Equation 5.10 gives:

$$\log i_{N+1} = \log i_N - \frac{f(\log i_N) \times \Delta \log i}{f(\log i_N) - f(\log i_N + \Delta \log i)}$$ **Equation 5.13**

The iteration used a starting value of log *i* of 3.0 and a Δ log *i* value of 0.0001-log. The iteration was repeated until the absolute difference between log i_{N+1} and log i_N was less than 0.0000001.

The analysis showed which of the coefficients A through G of Equation 5.6 were statistically significant at a 95th percent confidence level (i.e. p-statistics in Table 5.5 < 0.05).

10. Using non-linear multivariate regression, biodosimetry data (including controls) was fitted to Equation 5.6. The non-linear multivariate regression used the results of Step 9 as initial values for the equation coefficients and was run to minimize the sum of the squares of the residuals defined as the difference between the predicted and measured log inactivation. The analysis used the Newton Method to iteratively solve for the predicted value of log *i* and the associated value of D_L as described in step 9.
11. Calculate the standard deviation of the residuals.
12. Calculate a Grubb's statistic for the number of test conditions and for the total number of replicates using:

$$G = \frac{N-1}{N^{1/2}} \times \left(\frac{t\left(\frac{p}{2 \times N}, N-2\right)^2}{N-2+t\left(\frac{p}{2 \times N}, N-2\right)^2} \right)^{1/2}$$ **Equation 5.14**

where N is the number of data points used to define the fitted equation, t is a Student's t-statistic with N-2 degrees of freedom, and p is the probability of the outlier. In this analysis, p was set to 0.1.

13. Identify data outliers as having a residual greater than the product of the Grubb's statistic and the standard deviation of the residuals. Remove the worst outlier and repeat steps 9 to 13 until no outliers are identified. In this analysis, two types of outliers are defined. Outlier test conditions are identified using the Grubb's statistic for the number of test conditions. An outlier test condition indicates that there was an error that impacted all replicates with a given test condition. Outlier replicates are identified using the Grubb's statistic for the full dataset including all replicates. An outlier replicate indicates there was an error that impacted that one replicate.

Table 5.6 summarizes the analysis including:

1. The total number of test conditions.
2. The number of test conditions removed because the log inactivation was greater than the range used to define the dose-response curves.
3. The number of test conditions with zero effluent counts or high standard deviations between the replicates.
4. The number of test conditions identified as outliers.
5. The Grubb's statistics and standard deviations of the residuals used to define those outliers.

Table 5.7 provides detail on the test conditions removed from the dataset as either outliers or having log inactivation values that exceeded the maximum log inactivation of the UV dose response curve, as well as those data points that were included in the test plan but for which results were not available from the contract lab (GAP Enviromicrobial Services).

Table 5.6 **Grubb's Statistics and Standard Deviation of the Residuals with the Best Fit to Equation 5.6**			
	WF-115-4	**WF-125-6**	**WF-225-8**
Total Number of Test Conditions	26	26	23
Total Number of log *i* Data Points in test plan	78	78	69
# Data Points with log *i* > CB Range or Plate Counts ≤ 1	0	0	4
# Data Points with Zero Effluent Counts	0	0	3
# Data Points with High Standard Deviations between Replicates	0	0	3
Number of Outlier Replicates based on Grubb's statistic	0	3	1
Grubb's statistic for # data points less outliers	3.2970	3.2829	3.2060
Standard Deviation of All Residuals (log units)	0.18318	0.14416	0.11966

Figures 5.9a through 5.11b compare the measured log inactivation with the inactivation predicted using Equation 5.6 and the coefficients in Table 5.5 for the WF-115-4, WF-125-6, and WF-225-8 reactors, respectively. The relation was fitted using a linear function, y = Ax, with a slopes ranging from 1.0013 to 1.0031 and R-squared values greater than 0.9900. Figures 5.9b through 5.11b show the residuals between the predicted and measured log inactivation as a function of the predicted log inactivation for the WF-115-4, WF-125-6, and WF-225-8 reactors, respectively. Since multivariate non-linear regression minimized the absolute error, the residuals in units of log inactivation appear normally distributed about zero and do not depend on the predicted log *i*.

Table 5.7 Biodosimetry Data Identified as Outliers or not enumerated by GAP

Test	**Microbe**	**Sample**	**Comment**
607	MS2	A, B, C	Grubb's Outlier
813	MS2	B	Grubb's Outlier
813	MS2	C	Log i > log i max
806	MS2	A, B, C	Log i > log i max
807	MS2	A, B, C	Zero effluent counts
Control 7	T1UV	A, B, C	High standard deviations

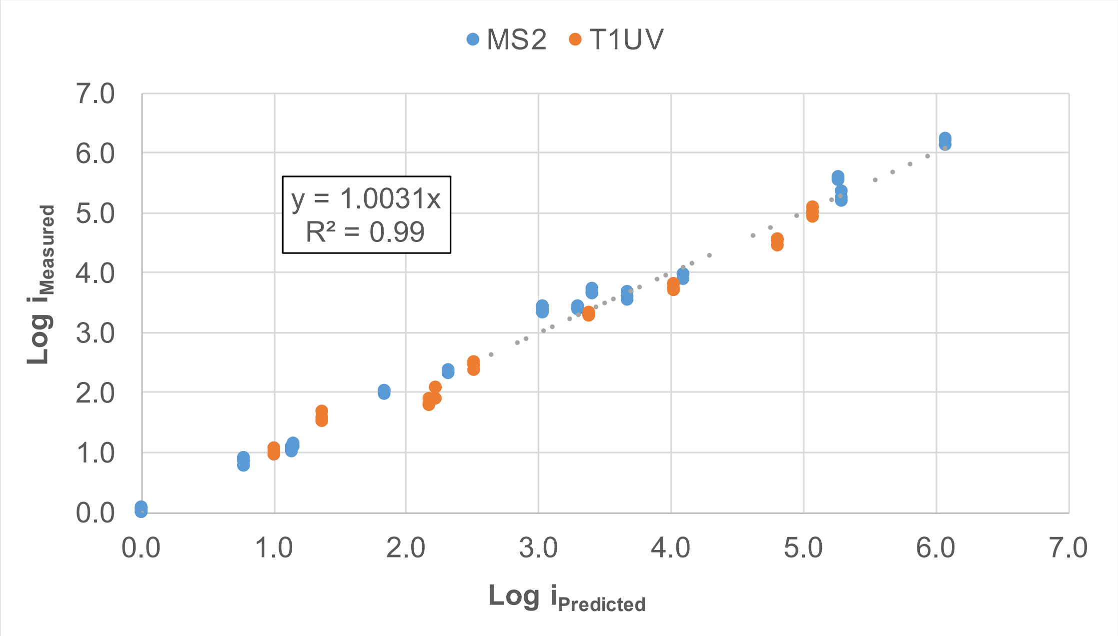

Figure 5.9a **Measured vs. Predicted Log Removal for the WF-115-4**

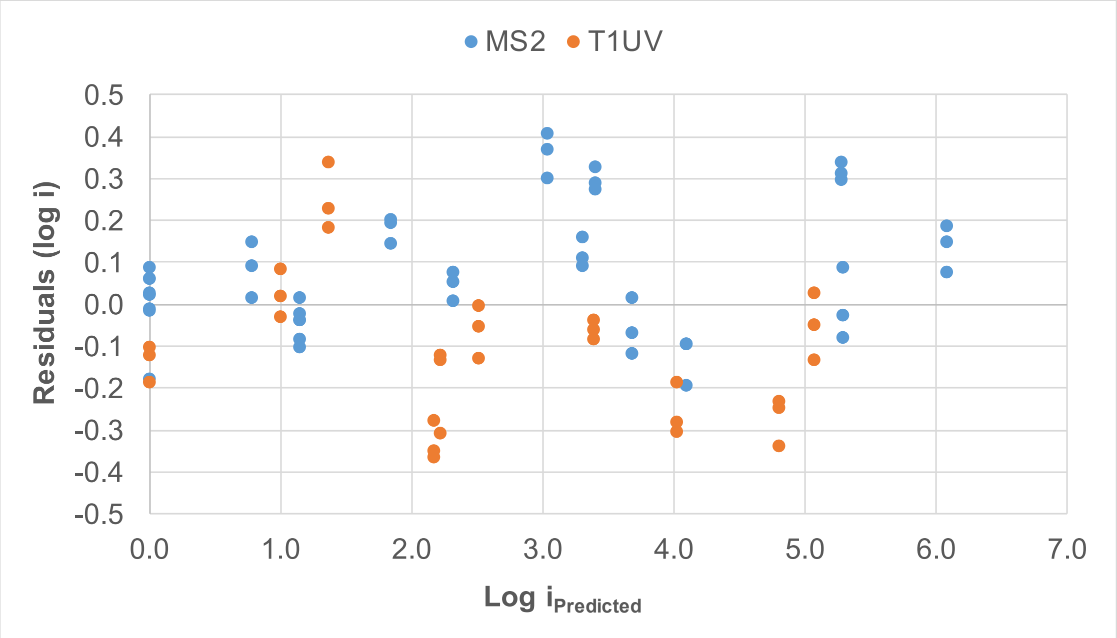

Figure 5.9b **Model Residuals vs. Predicted Log Removal for the WF-115-4**

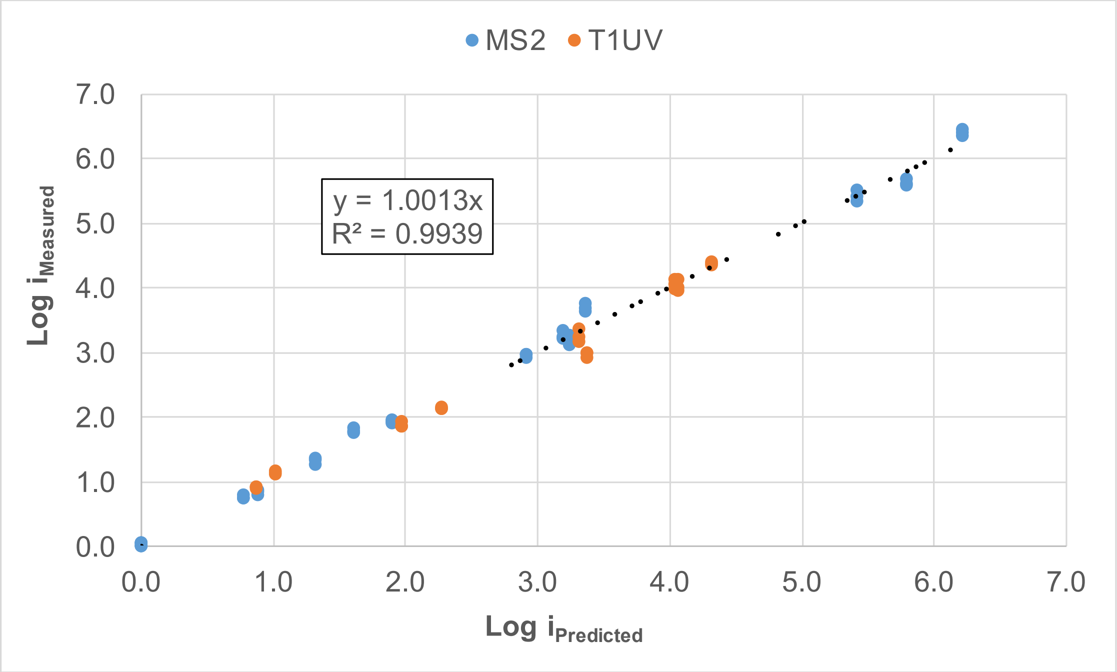

Figure 5.10a **Measured vs. Predicted Log Removal for the WF-125-6**

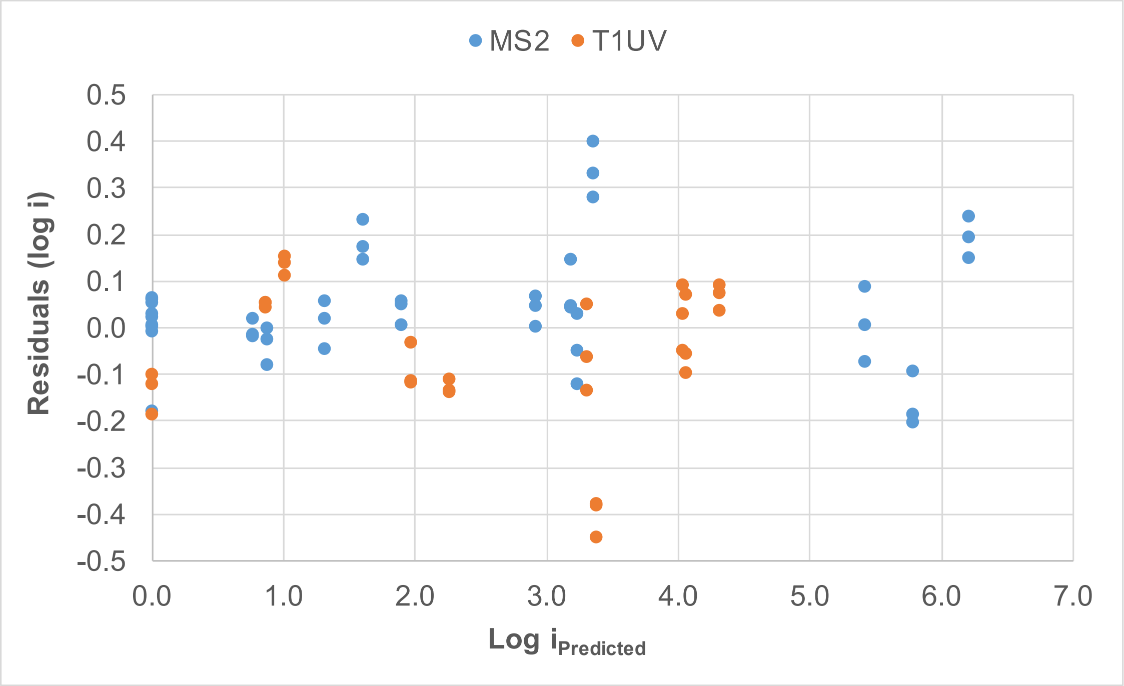

Figure 5.10b **Model Residuals vs. Predicted Log Removal for the WF-125-6**

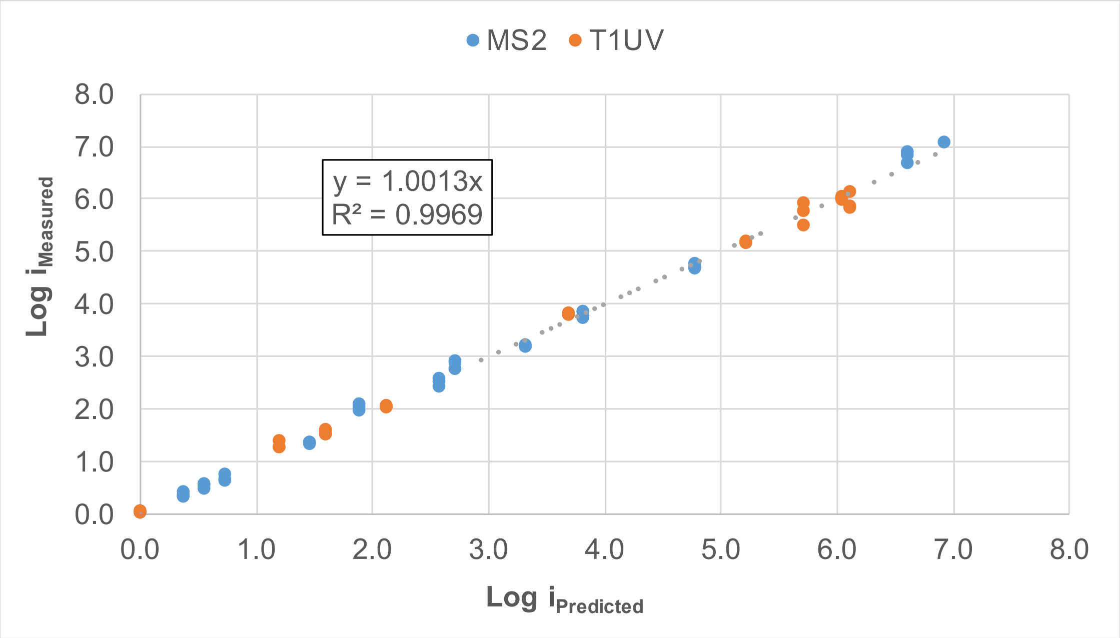

Figure 5.11a **Measured vs. Predicted Log Removal for the WF-225-8**

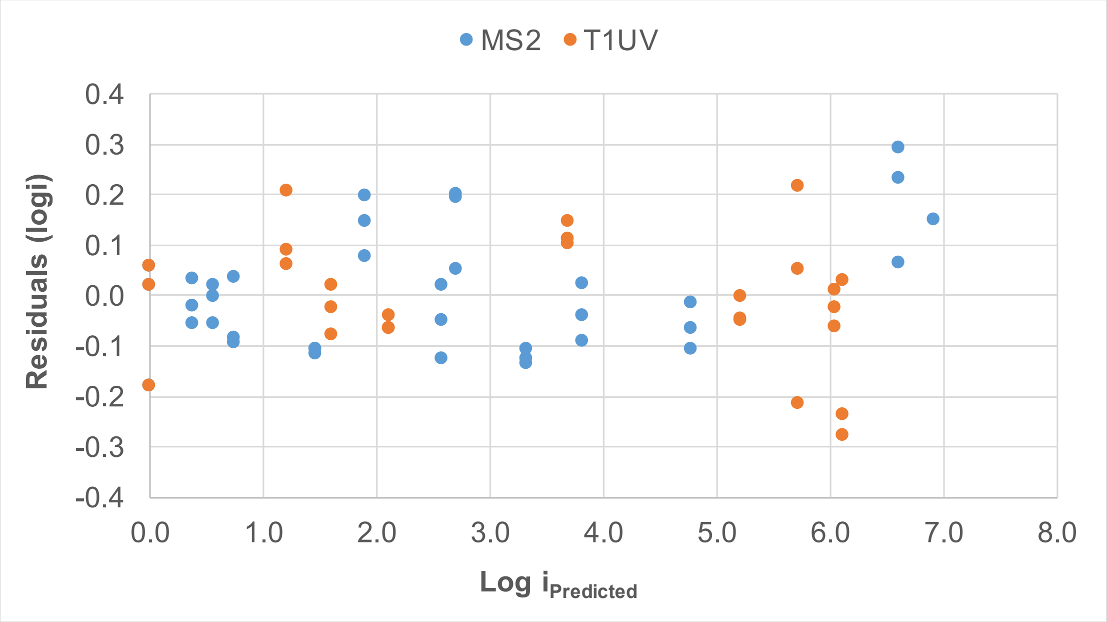

Figure 5.11b **Model Residuals vs. Predicted Log Removal for the WF-225-8**

5.4.3 Calculated Dose Approach without UVT monitoring

Theory and validation data with UV reactors show that log inactivation at a fixed UVT lies along a single relationship defined as a function of a combined variable, $S/Q/D_L$. If the UV sensor is optimally positioned, the relationships between the log inactivation and the combined variable at different UVTs tend to align on top of each other. If those relationships align on top of each other, a single relationship between log inactivation and the combined variable can be defined for efficient UV dose monitoring that does not require an online UVT monitor as:

$$\log i = f\left(\frac{S}{Q \times D_L}\right)$$ **Equation 5.15**

where *f* is a mathematical function that describes the relation between the log inactivation and the combined variable ($S/Q/D_L$).

The WF-115-4, WF-125-6, and WF-225-8 reactors do not have the ability to adjust their water layer, so the optimal water layer could not be determined. Figure 5.12a through 5.12c show the relationships between the measured log inactivation and $S/Q/D_L$ for the WF-115-4, WF-125-6, and WF-225-8, respectively.

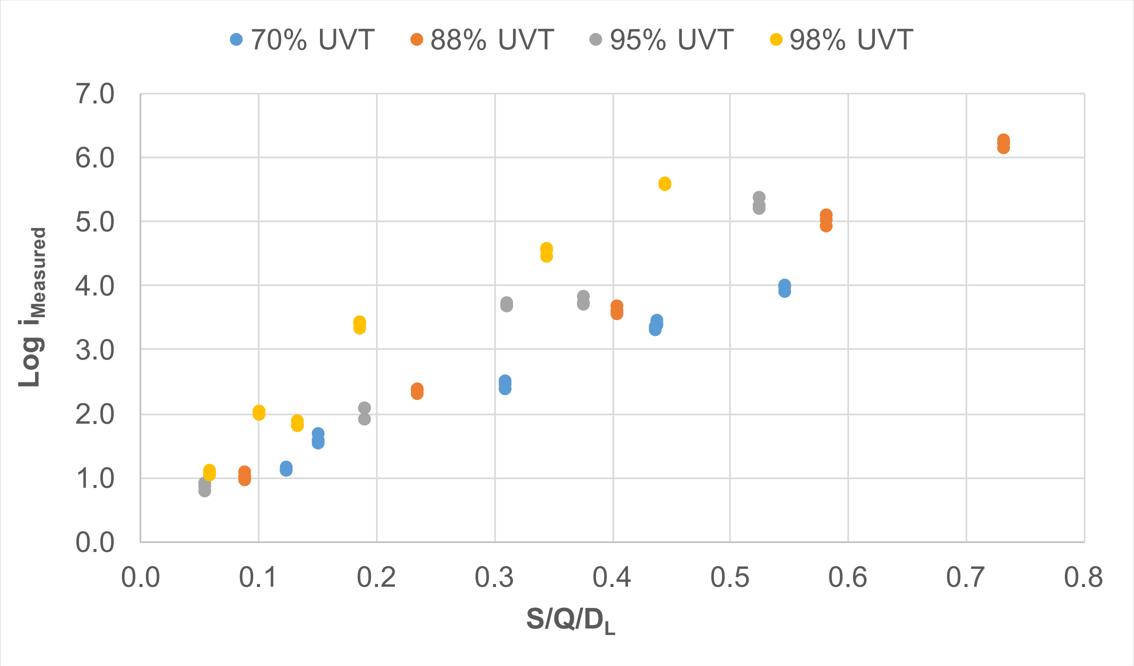

Figure 5.12a **Measured Log Inactivation as a function of $S/Q/D_L$ for the WF-115-4**

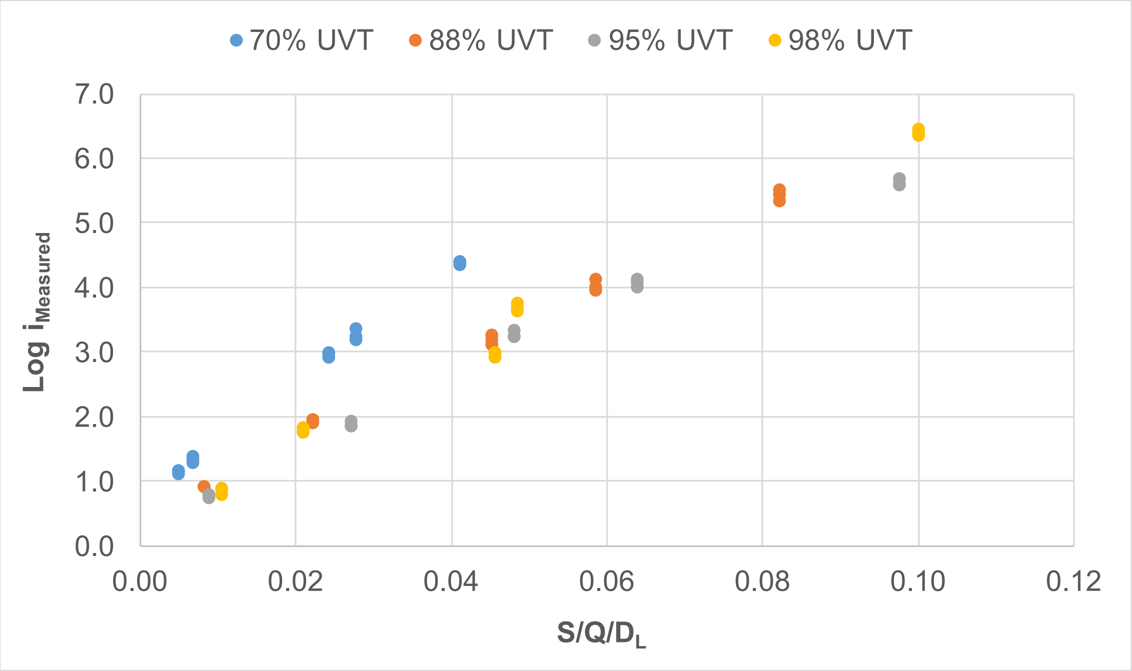

Figure 5.12b **Measured Log Inactivation as a function of S/Q/D_L for the WF-125-6**

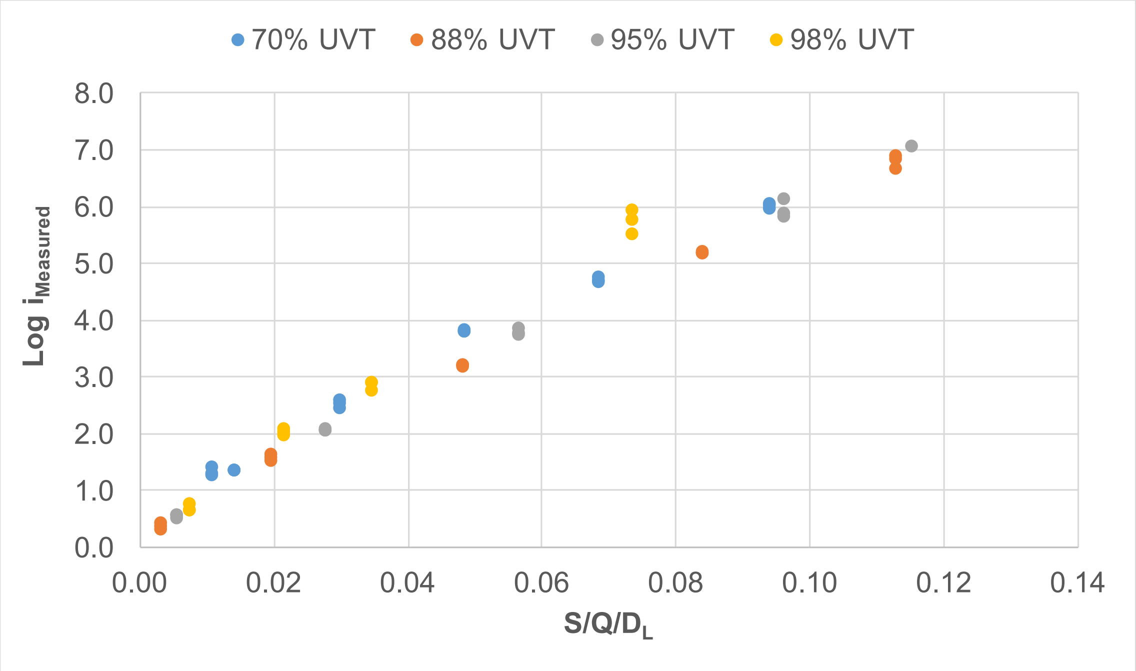

Figure 5.12c **Measured Log Inactivation as a function of S/Q/D_L for the WF-225-8**

Figures 5.13a through 5.13c show the UVT data that provides the minimum log i at a particular S/Q/D_L operating condition where the log inactivation is predicted using Equation 5.6. For each reactor, the relationship was best fit with a power function:

$$\log i = A' \times \left(\frac{S}{Q \times D_L}\right)^{B'}$$ **Equation 5.16**

where S is the measured UV sensor value (W/m^2), Q is the flow rate (m^3/hr), D_L is the UV sensitivity of the microbe, and the coefficients A' and B' are provided in Table 5.8.

Table 5.8 Coefficients for Equation 5.16

Reactor	A'	B'	Maximum log i	Max Log I + Uin
WF-115-4	6.8279	0.85699	6.08	6.44
WF-125-6	39.482	0.83263	6.21	6.50
WF-225-8	40.400	0.82730	6.91	7.15

Figures 5.13a through 5.13c compare the minimum log i as a function of S/Q/D_L predicted by Equation 5.16 to the measured log inactivation data for the WF-115-4, WF125-6, and WF-225-8, respectively.

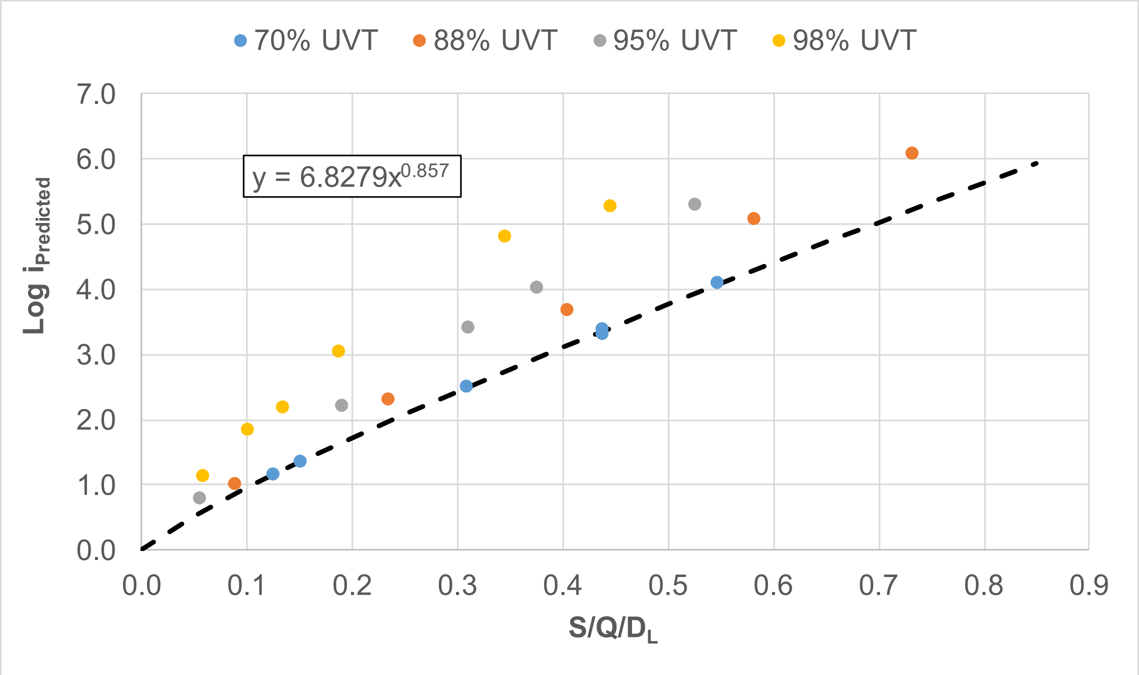

Figure 5.13a **Measured Log Inactivation as a function of S/Q/D_L for the WF-115-4**

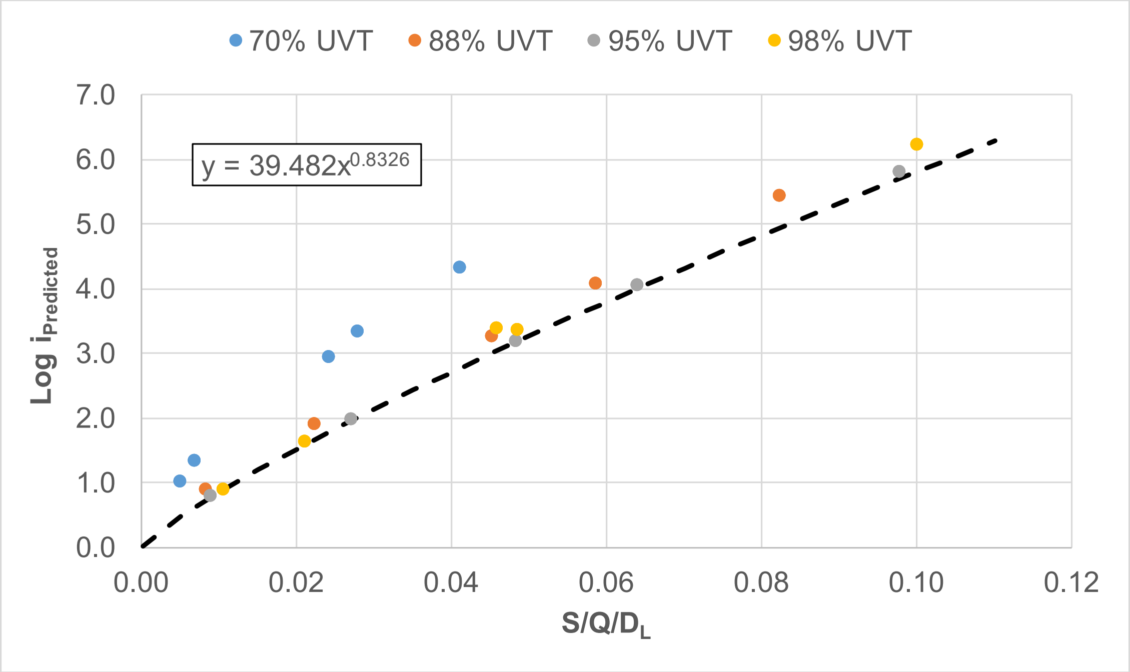

Figure 5.13b Measured Log Inactivation as a function of S/Q/D_L for the WF-125-6

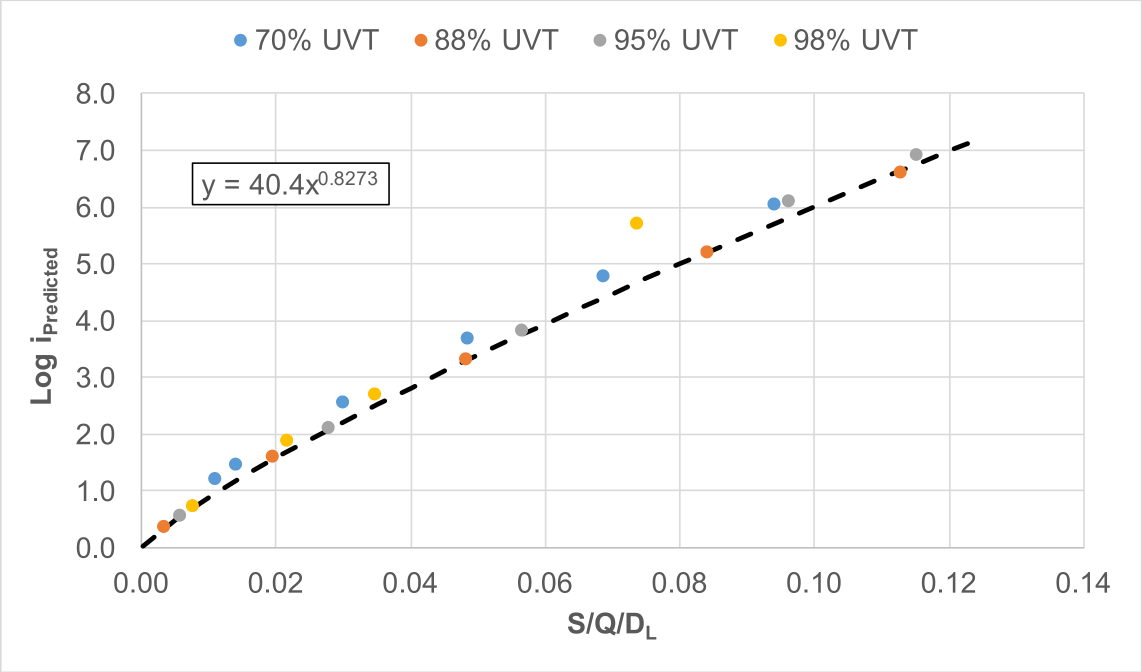

Figure 5.13c Measured Log Inactivation as a function of S/Q/D_L for the WF-225-8

5.4.4 Prediction of RED

The RED delivered by the UV reactor can be predicted using:

$$RED = \log i \times D_L$$ **Equation 5.17**

If Equation 5.6 is used to predict log inactivation, the RED is expressed as:

$$RED = \ log\ i \ \times D_L = 10^{A + B \times UVA} \times UVA^{C + D \times UVA} \times \left(\frac{S/S_0}{Q \times D_L} \right)^{E + F \times UVA + G \times UVA^2} \times D_L$$

Equation 5.18

If Equation 5.16 is used to predict log inactivation, the RED is expressed as:

$$RED = logi \times D_L = \left[A' \times \left(\frac{S}{Q \times D_L} \right)^{B'} \right] \times D_L$$ **Equation 5.19**

Figures 5.14a through 5.14c compare the measured versus predicted RED where log inactivation was predicted using Equation 5.6 for the WF-115-4, WF-125-6, and WF-225-8, respectively.

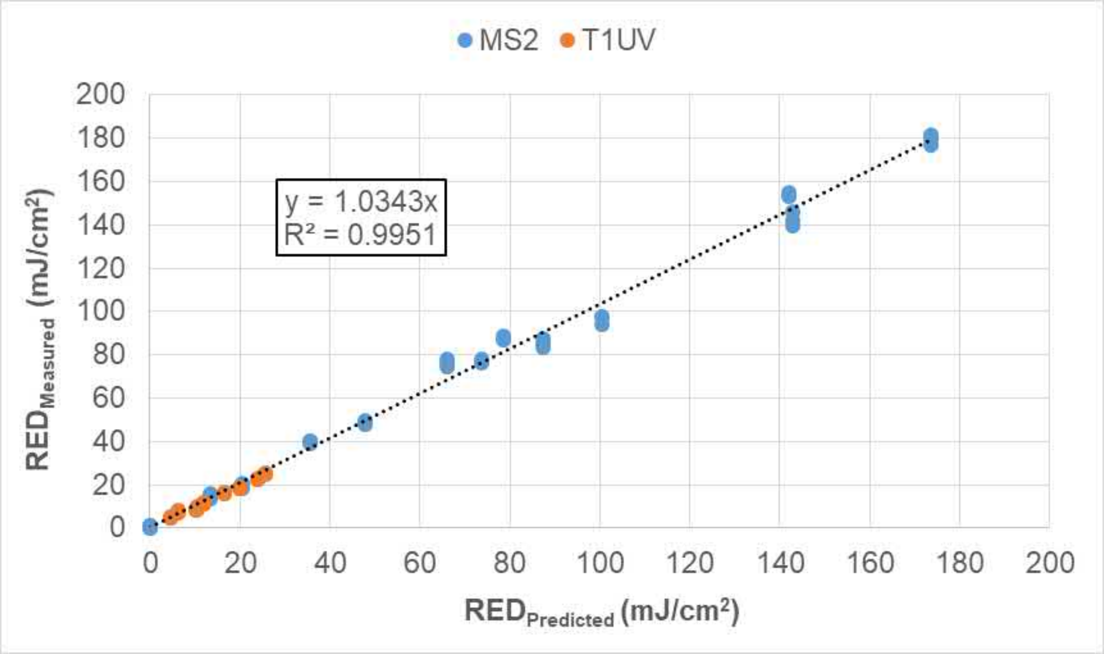

Figure 5.14a **Measured Versus Predicted RED for the WF-115-4**

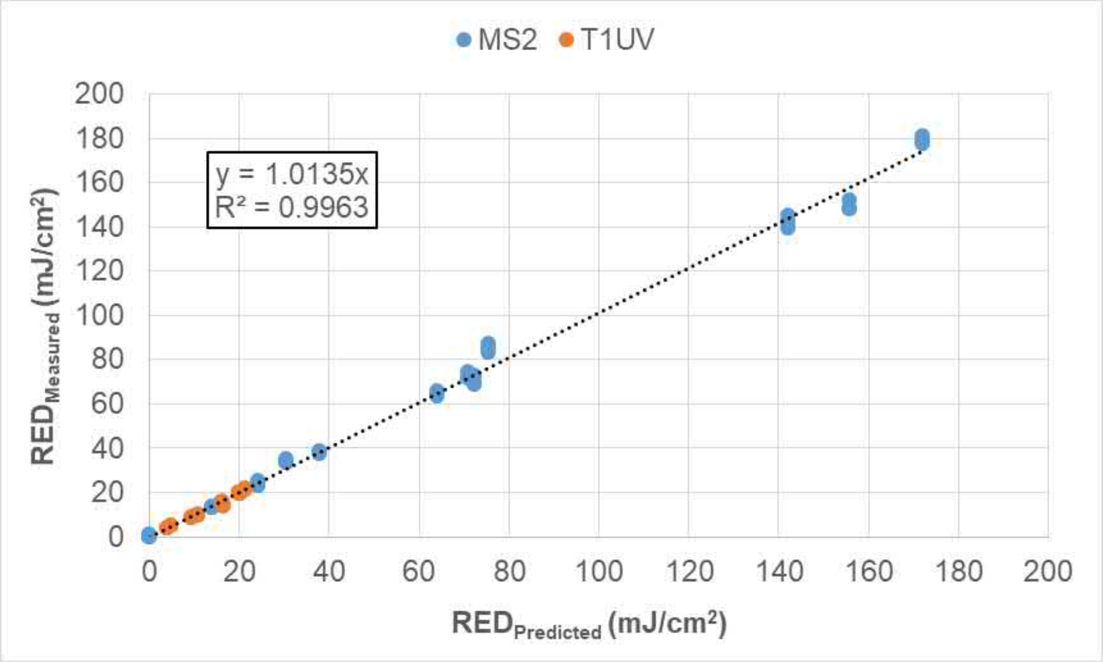

Figure 5.14b Measured Versus Predicted RED for the WF-125-6

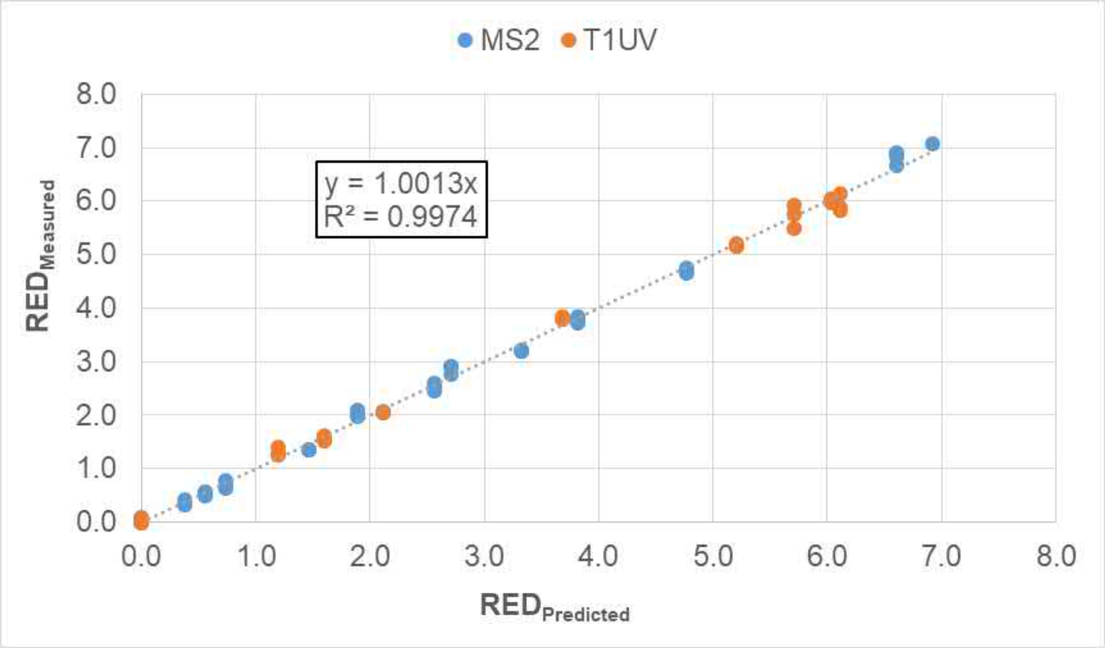

Figure 5.14c Measured Versus Predicted RED for the WF-225-8

5.4.5 Validated Range

Figures 5.15 through 5.17 show the validated range of the WF-115-4, WF-125-6, and WF-225-8 reactors using plots of UVT versus flow measured during validation and predicted log inactivation as a function of UVT. Tables 5.9 through 5.11 provide the coordinates for the bounds of the validated ranges of the WF-115-4, WF-125-6, and WF-225-8 reactors, respectively.

The validated range is used to define off-spec performance and default values for dose monitoring. If Equation 5.6 is used for dose monitoring and the measured flow rate is less than the validated range, the lower limit of the flow rate should be used as an input to Equation 5.6. If the measured UVT is above the upper limit of the validated range, then the upper limit of the UVT should be used as an input to Equation 5.6. If the calculated log inactivation is greater than the upper bound of the log inactivation range, the upper limit should be reported as the delivered log inactivation. The UV system operation is off specification if the flow rate is greater than the maximum validated flow rate or the UVT is less than the lower limit of the validated UVT.

If Equation 5.16 is used for dose monitoring and the measured flow rate is less than the validated range, the lower limit of the flow rate should be used as an input to Equation 5.16. However, since the minimum or the intermediate UVT was used to define Equation 5.16, the equation provides valid predictions of log inactivation at all UVTs lower and higher than that value. If the calculated log inactivation is greater than the upper bound of the log inactivation range given in Table 5.8, the upper limit should be reported as the delivered log inactivation. The UV system operation is off specification if the flow rate is greater than the maximum validated flow rate.

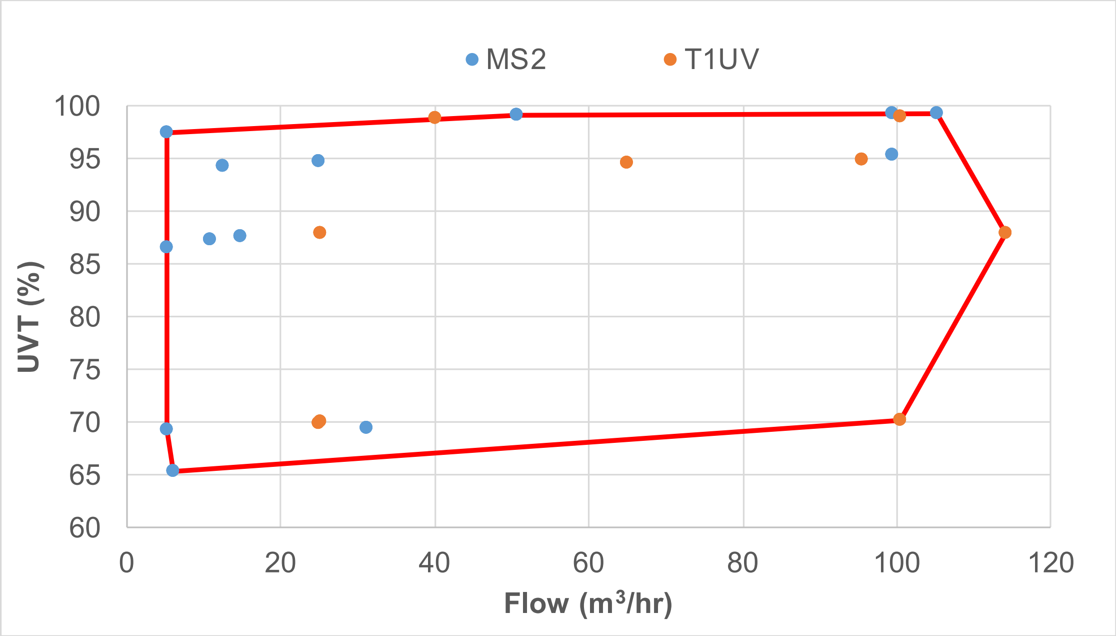

Figure 5.15a **Validated Range of UVT versus Flow for the WF-115-4**

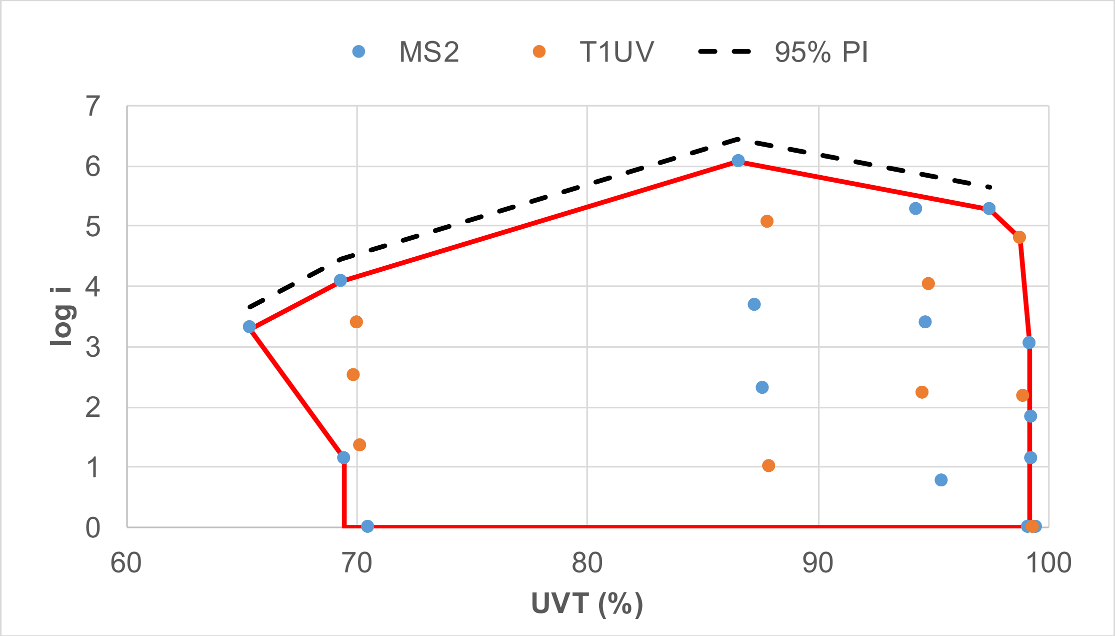

Figure 5.15b **Validated Range of Predicted Log Removal versus UVT for the WF-115-4**

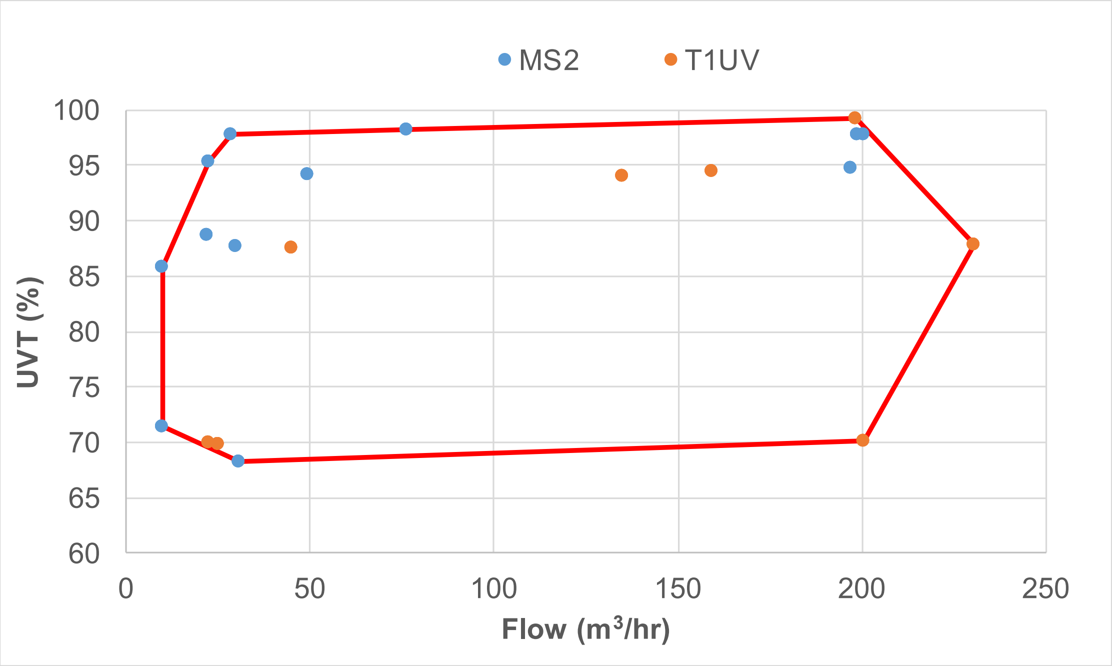

Figure 5.16a **Validated Range of UVT versus Flow for the WF-125-6**

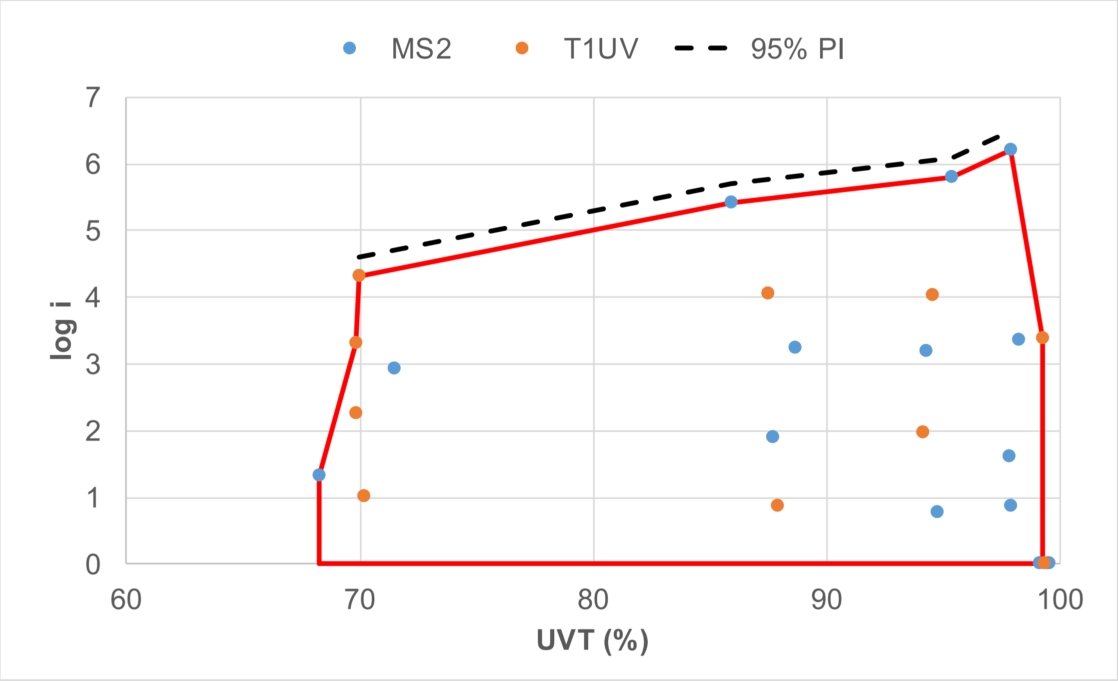

Figure 5.16b **Validated Range of Predicted Log Removal versus UVT for the WF-125-6**

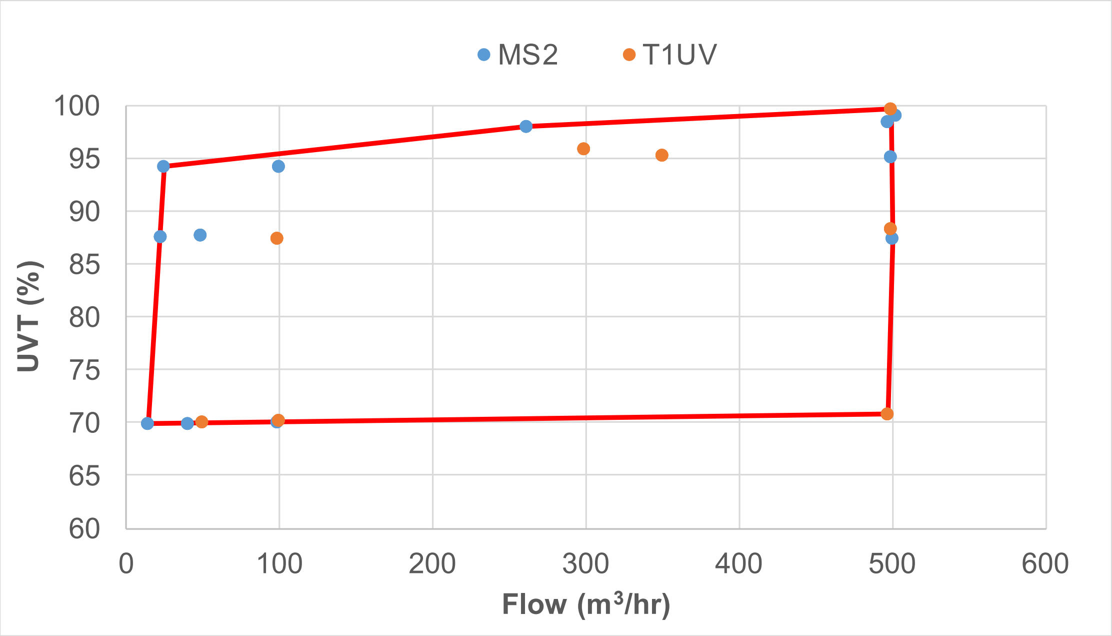

Figure 5.17a Validated Range of UVT versus Flow for the WF-225-8

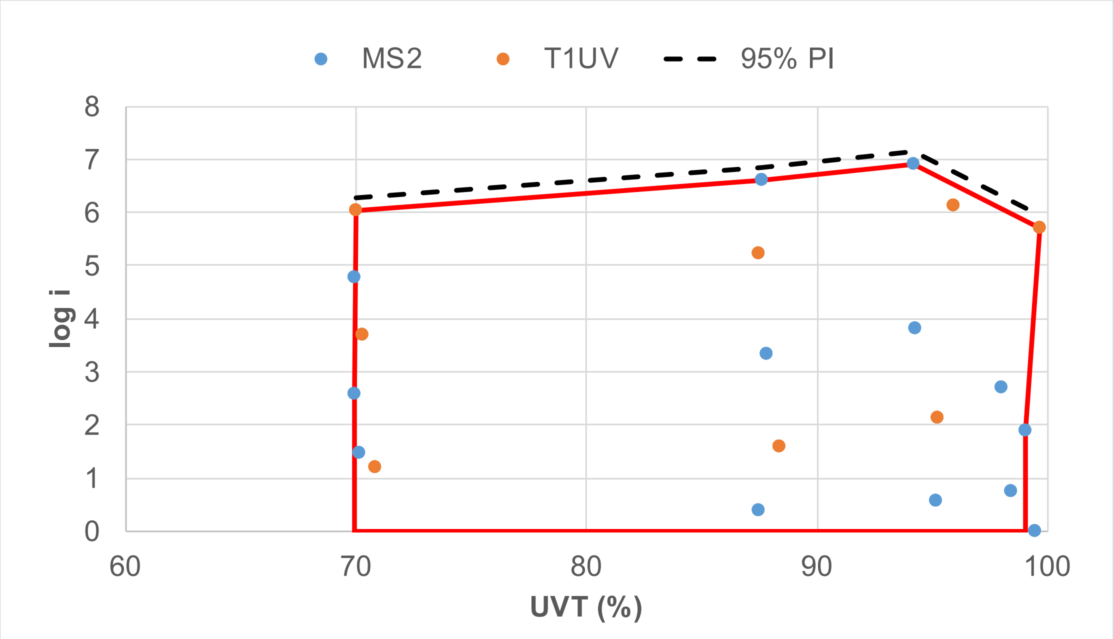

Figure 5.17b Validated Range of Predicted Log Removal versus UVT for the WF-225-8

Table 5.9 Validation Envelope Bounds for Figure 5.15

Figure 5.15a		Figure 5.15b		
Q (m^3/hr)	UVT (%)	UVT (%)	log i	log I plus U_{in}
5.94	65.36	69.46	0.00	-
5.14	69.30	69.46	1.15	-
5.23	97.42	65.36	3.30	3.66
50.63	99.15	69.30	4.09	4.45
105.2	99.25	86.52	6.08	6.44
114.14	87.90	97.42	5.27	5.63
100.39	70.13	98.73	4.81	-
-	-	99.15	3.04	-
-	-	99.15	0.00	-

Table 5.10 Validation Envelope Bounds for Figure 5.16

Figure 5.16a		Figure 5.16b		
Q (m^3/hr)	UVT (%)	UVT (%)	log i	log I plus U_{in}
9.86	71.45	68.23	0	-
10.14	85.91	68.23	1.32	-
22.56	95.35	69.80	3.31	-
28.46	97.84	69.98	4.31	4.60
76.39	98.18	85.91	5.42	5.71
198.47	99.23	95.35	5.79	6.08
230.28	87.89	97.84	6.21	6.50
200.57	70.17	99.23	3.38	-
30.67	68.23	99.23	0.00	-

Table 5.11 Validation Envelope Bounds for Figure 5.17

Figure 5.17a		Figure 5.17b		
Q (m^3/hr)	UVT (%)	UVT (%)	log i	log I plus U_{in}
14.61	69.91	69.91	0.00	-
24.54	94.18	69.91	2.57	-
261.3	97.99	70.01	6.04	6.28
498.94	99.64	87.63	6.60	6.84
500.25	87.49	94.18	6.91	7.15
496.84	70.84	99.64	5.71	5.95
-	-	99.06	1.89	-
-	-	99.06	0.00	-

Figures 5.18 through 5.20 show the measured log inactivation as a function of the value $S/S_0/Q/D_L$ at various UVTs for the WF-115-4, WF-125-6, and WF-225-8 reactors, respectively. As the figures show, the relationships at each UVT can be fit using a power function that passes through the origin. The validation data set includes control samples measured with the lamps turned off (i.e. $S/S_0 = 0$) that show no log reduction. The validation analysis also shows that log inactivation is predicted as a function of a combined variable $S/S_0/Q/D_L$ with a single relationship that passes through the origin. The analysis shows that log inactivation can be interpolated along this curve, including values of S/S_0 down to zero.

Figures 5.18 through 5.20 and the theoretical and experimental development of the UV dose monitoring algorithm presented in Appendix H show that log inactivation at a given UVT is a function of a master variable $(S/S_0)/Q/D_L$. The analysis shows that, regardless of the combinations of S/S_0, Q, and D_L used, the equations will predict valid log inactivation for values of $(S/S_0)/Q/D_L$ from zero up to the maximum value of the validated range of $(S/S_0)/Q/D_L$. For that reason, Equations 5.6 and 5.16 can be used to directly predict the log inactivation of Cryptosporidium, Giardia and adenovirus by setting the value of D_L to that expected with those microbes. This approach is discussed in the next section.

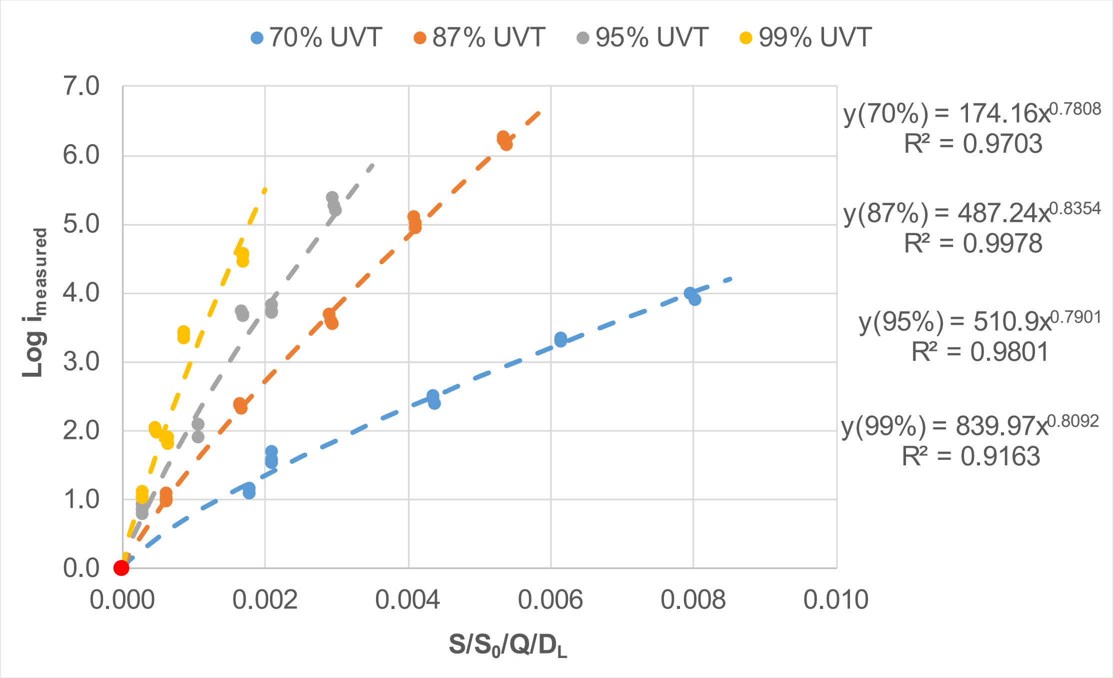

Figure 5.18 **Measured log inactivation as a function of $S/S_0/Q/D_L$ for the WF-115-4**

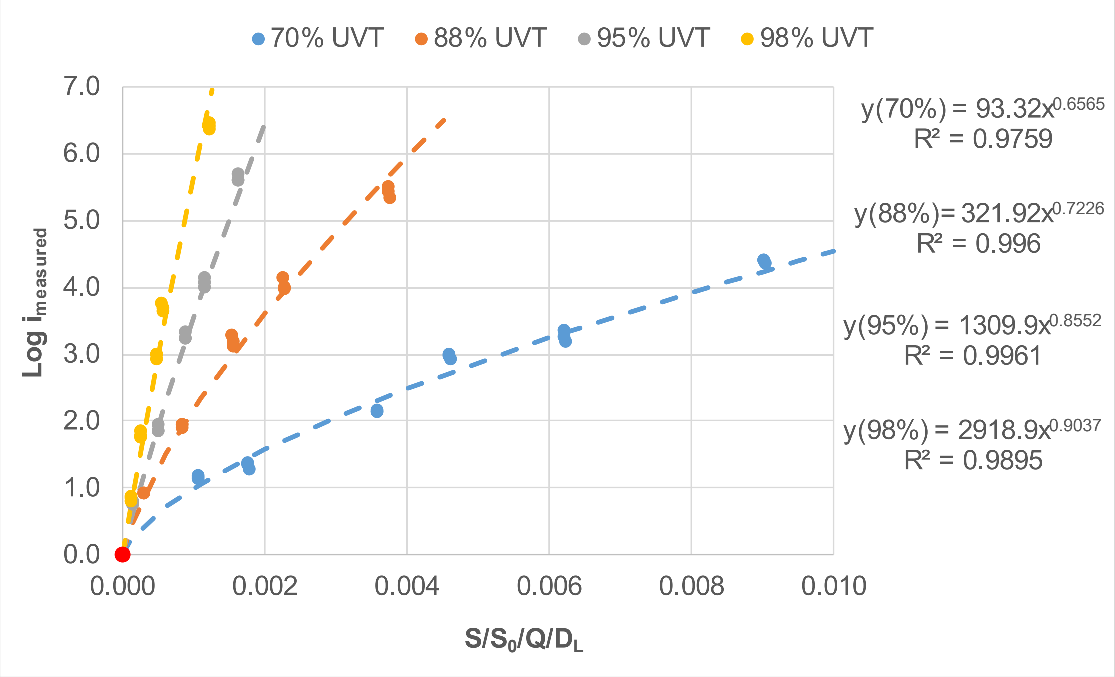

Figure 5.19 Measured log inactivation as a function of $S/S_0/Q/D_L$ for the WF-125-6

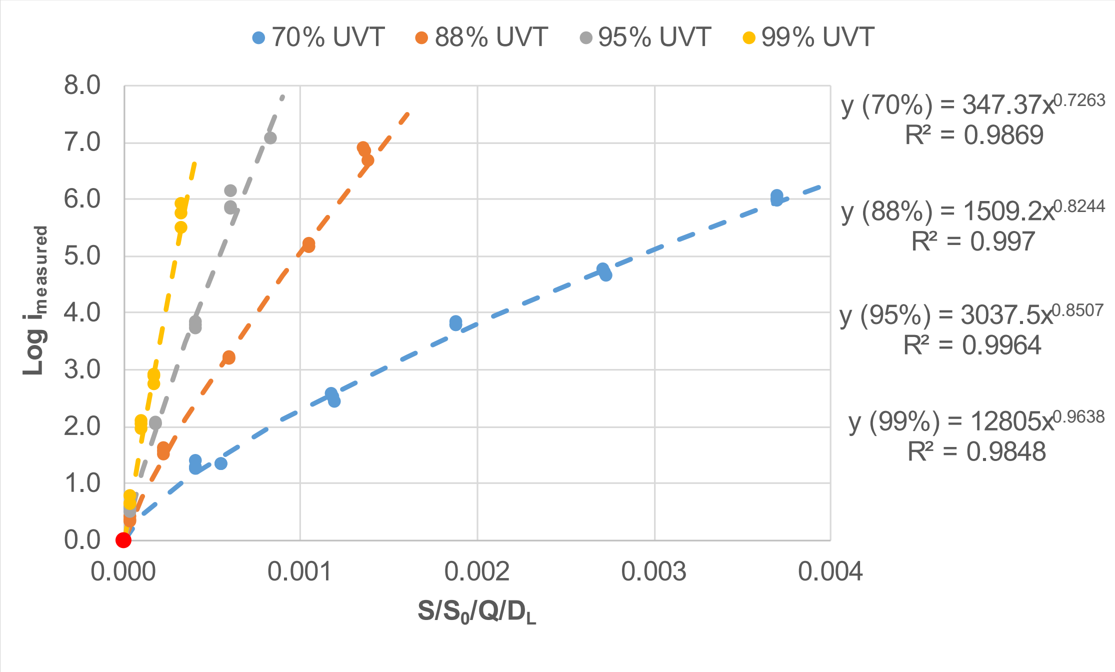

Figure 5.20 Measured log inactivation as a function of $S/S_0/Q/D_L$ for the WF-225-8

5.5 UV DOSE MONITORING

Equations 5.6 and 5.18 or Equations 5.16 and 5.19 may be used to predict the log inactivation and RED of the test microbes MS2 and T1UV phage by setting the value of D_L to the value expected with those microbes. Alternatively, these equations may be used to predict the log inactivation and RED of the target pathogen (e.g. *Cryptosporidium*) by setting the value of D_L to the value expected with that pathogen. This section of the report describes these approaches.

The UV sensitivity of MS2 and T1UV used can be determined using:

$$D_L = \frac{Dose}{\log i} = A + B \times \log i \qquad \textbf{Equation 5.20}$$

where A and B are coefficients describing the average dose-response of these microbes. The individual collimated beam dose-response coefficients are provided in Tables 5.3 to 5.4 while the average coefficients are summarized in Table 5.12.

Table 5.12 Coefficients for Calculating the UV sensitivity of MS2 and T1UV phage

Microbe	Coefficient A	Coefficient B	log *i* Upper Limit
MS2	16.112	2.0267	7.65 log
T1UV	4.5809	0.077114	6.20 log

The UV sensitivity of *Cryptosporidium*, *Giardia*, and adenovirus can be calculated using:

$$D_L = D/\log i \qquad \textbf{Equation 5.21}$$

where D is the UV dose requirement specified by the LT2ESWTR for a log inactivation credit of log *i*. The UV sensitivity, calculated using Equations 5.21, can be interpolated as a function of UV dose using:

$$D_L = m \times D + b \qquad \textbf{Equation 5.22}$$

where m and b are coefficients tabulated in Table 5.13.

Figure 5.21 shows D_L as a function of UV dose for *Cryptosporidium*, *Giardia*, and adenovirus predicted using Equation 5.22 and the coefficients in Table 5.13. For *Cryptosporidium* and *Giardia*, the relationship between D_L and dose for log inactivation from 2.0 to 6.0 log (i.e., doses from 5 to 85 mJ/cm^2) can be approximated by a linear function. The analysis indicates that D_L above 6.0 log inactivation can be approximated by extrapolating Equation 5.22 using the coefficients in Table 5.13 for 5.5 to 6.0 log.

Table 5.13 Coefficients for Linear Interpolation of UV Sensitivity

Log I	UV Dose (mJ/cm^2)	*Crypto*		UV Dose (mJ/cm^2)	*Giardia*		UV Dose (mJ/cm^2)	Adenovirus	
		m	b		m	b		m	b
0 - 0.5	0.0 to 1.6	0.0000	3.200	0.0 to 1.5	0.0000	3.000	0.0 to 39	0.000	78.00
0.5 - 1.0	1.6 to 2.5	-0.7777	4.444	1.5 to 2.1	-1.500	5.250	39 to 58	-1.052	119.0
1.0 - 1.5	2.5 to 3.9	0.07143	2.321	2.1 to 3.0	-0.1111	2.333	58 to 79	-0.2539	72.73
1.5 - 2.0	3.9 to 5.8	0.1578	1.984	3.0 to 5.2	0.2727	1.181	79 to 100	-0.1269	62.69
2.0 - 2.5	5.8 to 8.5	0.1851	1.825	5.2 to 7.7	0.1920	1.601	100 to 121	-0.07619	57.61
2.5 - 3.0	8.5 to 12	0.1714	1.942	7.7 to 11	0.1777	1.711	121 to 143	-0.03333	52.43
3.0 - 3.5	12 to 15	0.09524	2.857	12 to 15	0.1547	1.964	143 to 163	-0.05476	55.49
3.5 - 4.0	15 to 22	0.1734	1.683	15 to 22	0.1734	1.683	163 to 186	-0.003106	47.07
4.0 - 4.5	22 to 30	0.1458	2.292	22 to 28	0.1204	2.852	186 to 208	-0.01263	48.85
4.5 - 5.0	30 to 45	0.1556	2.000	28 to 42	0.1556	1.867	208 to 231	-0.00097	46.42
5.0 - 5.5	45 to 64	0.1388	2.756	42 to 60	0.1394	2.545	231 to 253	-0.00909	48.30
5.5 - 6.0	64 to 85	0.1205	3.925	60 to 84	0.1288	3.182	253 to 276	0.00000	46.00

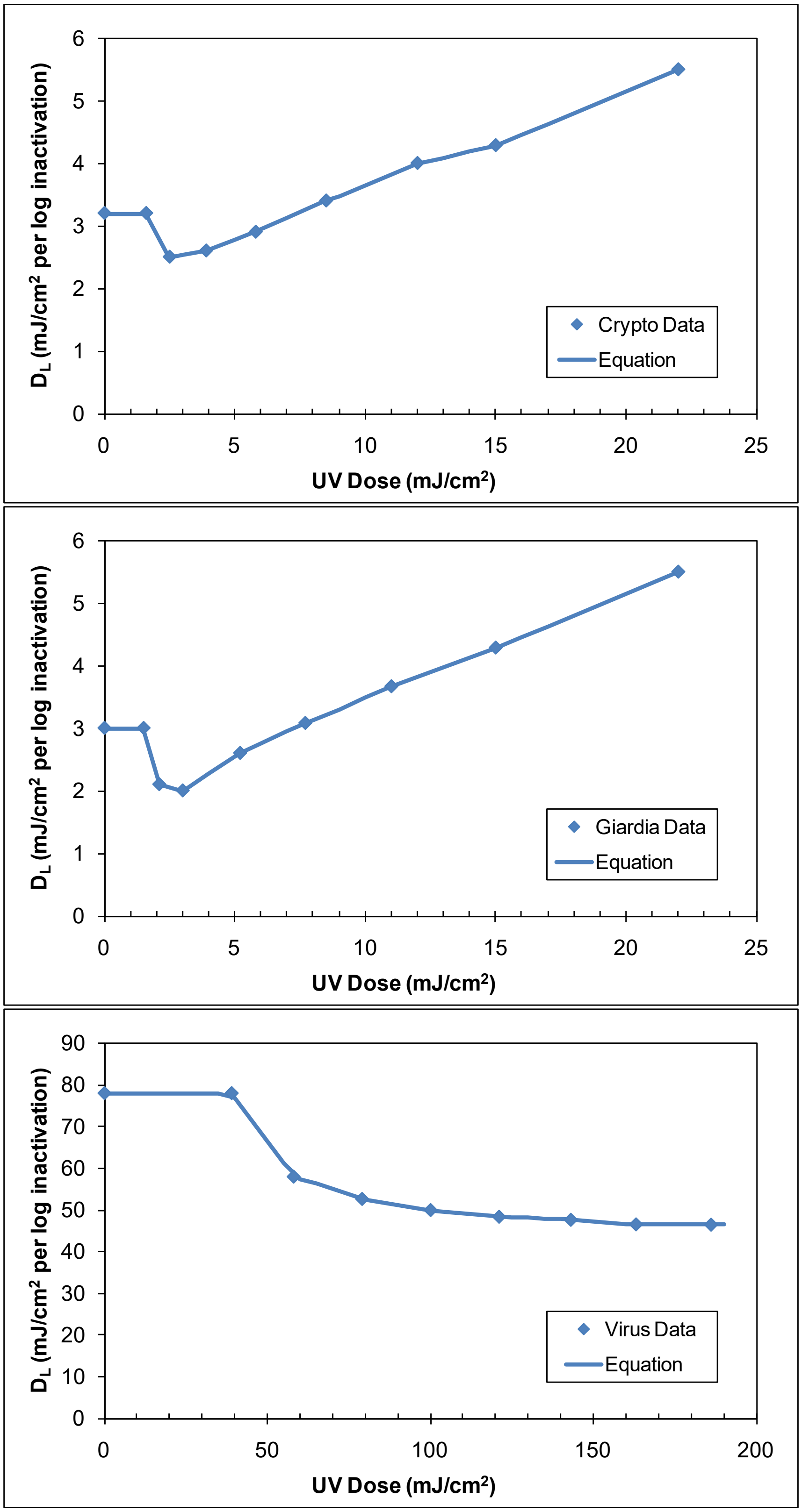

Figure 5.21 **D_L as a function of UV dose for *Cryptosporidium*, *Giardia*, and adenovirus**

5.5.1 Log Inactivation Calculation Example 1

This section of the report provides an example of log inactivation and RED calculation for MS2 phage, T1UV phage, *Cryptosporidium*, *Giardia,* and adenovirus at a fixed operating condition. In this example, the WF-115-4 reactor is operating at a flow of 50 m^3/hr, a UVT of 90 percent and a relative lamp output S/S_0 of 0.87. Log inactivation of the microbes is determined using Equation 5.6 and the coefficients presented in Table 5.5. Since the log inactivation predicted by Equation 5.6 depends on D_L, the equation is solved using an iterative approach using the following steps:

1. Define an initial value for log i_N = 2.0.
2. Determine the initial value for D_L using Equation 5.20 if the microbe of interest is MS2 or T1UV phage and Equation 5.22 if the microbe of interest is *Cryptosporidium*, *Giardia*, or adenovirus.
3. Using Equation 5.6, calculate the next value of log *i*.
4. Determine the RED using:

$$RED = D_L \times \log i$$ **Equation 5.23**

5. If the microbe of interest is MS2 or T1UV, calculate the new value of D_L using Equation 5.20 and the log I value from Step 3. If the microbe of interest is *Cryptosporidium*, *Giardia*, or adenovirus, calculate the new value of D_L using Equation 5.22 and the UV dose value determine in Step 4.
6. Repeat steps 3 to 5 until the absolute difference between consecutive predicted values of log *i* is less than 0.0001.

Table 5.14 provides the values of log *i* and D_L for *Cryptosporidium* log inactivation obtained using these steps. After seven iterations, Equation 5.6 predicts a *Cryptosporidium* log inactivation of 4.198. Table 5.15 presents the log inactivation, REDs and D_L for the regulated pathogens *Cryptosporidium*, *Giardia*, and adenovirus and the test microbes MS2 and T1UV phages.

Table 5.14 **Example 1 Calculations for *Cryptosporidium***			
	Log i	**RED_{crypto} (mJ/cm²)**	**D_L (mJ/cm² per log)**
Starting Value	2	22	5.4996
Iteration # 1	4.4664	24.563	5.8733
Iteration # 2	4.2204	24.788	5.9061
Iteration # 3	4.2003	24.807	5.9089
Iteration # 4	4.1986	24.809	5.9091
Iteration # 5	4.1984	24.809	5.9091
Iteration # 6	4.1984	24.809	5.9091
Iteration # 7	4.1984	24.809	5.9091

Table 5.15 **Example 1: Predicted Log Inactivation, RED and D_L of Target Microbes at 50 m³/hr, 90% UVT and S/S_0 = 0.87 for the WF-115-4**

	Crypto	*Giardia*	Adeno	MS2	T1UV
log inactivation	4.198	4.245	0.4547	1.521	4.884
RED (mJ/cm²)	24.81	24.77	35.46	29.21	24.21
D_L (mJ/cm² per logi)	5.909	5.834	78.00	19.20	4.958

5.5.2 Log Inactivation Calculation Example 2

Using the same conditions as Example 1, the WF-115-4 reactor is operating at a flow of 50 m³/hr, a UVT of 90 percent and a relative lamp output S/S_0 of 0.87. Log inactivation of the microbes is determined using Equation 5.16 and the coefficients presented in Table 5.8. Since the log inactivation predicted by Equation 5.16 depends on D_L, the equation is solved using an iterative approach using the following steps:

1. Calculate the sensor value at full power (Lamp ampere setting of 11 for the WF-115-4 and lamp ampere setting of 10 for the WF-125-6 and WF-225-8)
2. Multiply the sensor value by the relative lamp output.
3. Define an initial value for log i_N = 2.0.
4. Determine the initial value for D_L using Equation 5.20 if the microbe of interest is MS2 or T1UV phage and Equation 5.22 if the microbe of interest is *Cryptosporidium*, Giardia, or adenovirus.
5. Using Equation 5.16, calculate the next value of log *i*.

6. Determine the RED Equation 5.23.
7. If the microbe of interest is MS2 or T1UV, calculate the new value of D_L using Equation 5.20 and the log i value from Step 3. If the microbe of interest is *Cryptosporidium*, Giardia, or adenovirus, calculate the new value of D_L using Equation 5.22 and the UV dose value determine in Step 4.
8. Repeat steps 3 to 5 until the absolute difference between consecutive predicted values of log *i* is less than 0.0001.

Table 5.16 provides the values of log i_N and D_L for *Cryptosporidium* log inactivation obtained using these steps. After seven iterations, Equation 5.16 predicts a *Cryptosporidium* log inactivation of 3.879. Table 5.17 presents the log inactivation, REDs and D_L for the regulated pathogens *Cryptosporidium*, *Giardia*, and adenovirus and the test microbes MS2 and T1UV phages.

Table 5.16 Example 2 Calculations for *Cryptosporidium*

	Log i	**RED_{crypto} (mJ/cm^2)**	**D_L (mJ/cm^2 per log)**
Starting Value	2	22	5.499
Iteration # 1	3.6600	20.129	5.1733
Iteration # 2	3.8570	19.953	5.1429
Iteration # 3	3.8765	19.937	5.1400
Iteration # 4	3.8784	19.935	5.1397
Iteration # 5	3.8786	19.935	5.1397
Iteration # 6	3.8786	19.935	5.1397
Iteration # 7	3.8786	19.935	5.1397

Table 5.17 Example 2: Predicted Log Inactivation, RED and D_L of Target Microbes at 50 m^3/hr, 90% UVT and S/S_0 = 0.87 for the WF-115-4

	Crypto	*Giardia*	Adeno	MS2	T1UV
log inactivation	3.879	3.879	0.3771	1.282	4.038
RED (mJ/cm^2)	19.93	19.93	29.41	23.98	19.79
D_L (mJ/cm^2 per logi)	5.140	5.140	78.00	18.71	4.893

5.6 VALIDATION EQUATION QA/QC

Section 2.1.6 of the USEPA document entitled "Innovative Approaches for Validation of Ultraviolet Disinfection Reactors for Drinking Water Systems" states that equations using the combined variable, $(S/S_0)/(Q \times D_L)$, can provide valid predictions of log inactivation whenever the combined variable is within the validated range, even if the lamp output and/or UV sensitivity of the microbe used to define the combined variable are outside of the tested range for each of those individual variables. The validation report should demonstrate this ability by providing an analysis that shows that:

1. The equation calibrated using MS2 phage predicts the same log inactivation as the equation calibrated using T1UV phage.
2. The equation calibrated using low values of S/S_0 predicts the same log inactivation as the equation calibrated using high values of S/S_0.

An underlying assumption with this proof is that each of the three UV reactors were validated using two microbes, namely MS2 and T1UV phage, and validated over a range of lamp ampere settings that results in a range of relative lamp outputs, S/S_0.

A QA/QC was performed on the validation equation showing that the validation equation calibrated by MS2 phage predicts T1UV log inactivation and vice versa. The QA/QC was completed using the following steps:

1. For each reactor, Equation 5.6 was calibrated using only MS2 data.
2. For each reactor, Equation 5.6 was calibrated using only T1UV data.
3. The log inactivation is calculated, using each equation, at UVT values ranging from 70 to 98 percent UVT in 1.0 percent increments and spans the validated range of the combined variable using 17 discrete values at each UVT.
4. Calculate the 95 percent prediction interval by adding/subtracting the U_{in} of the combined equation (provided in Table 6.2) to the predicted log i.

Figures 5.22a through 5.22c show the comparisons between the MS2 log inactivation and the T1UV log inactivation for the WF-115-4, WF-125-6, and WF-225-8 reactors, respectively. Greater than 95.3 percent of the data fell within the 95 percent prediction intervals for WF-115-4, WF-125-6, and WF-225-8 UV reactors.

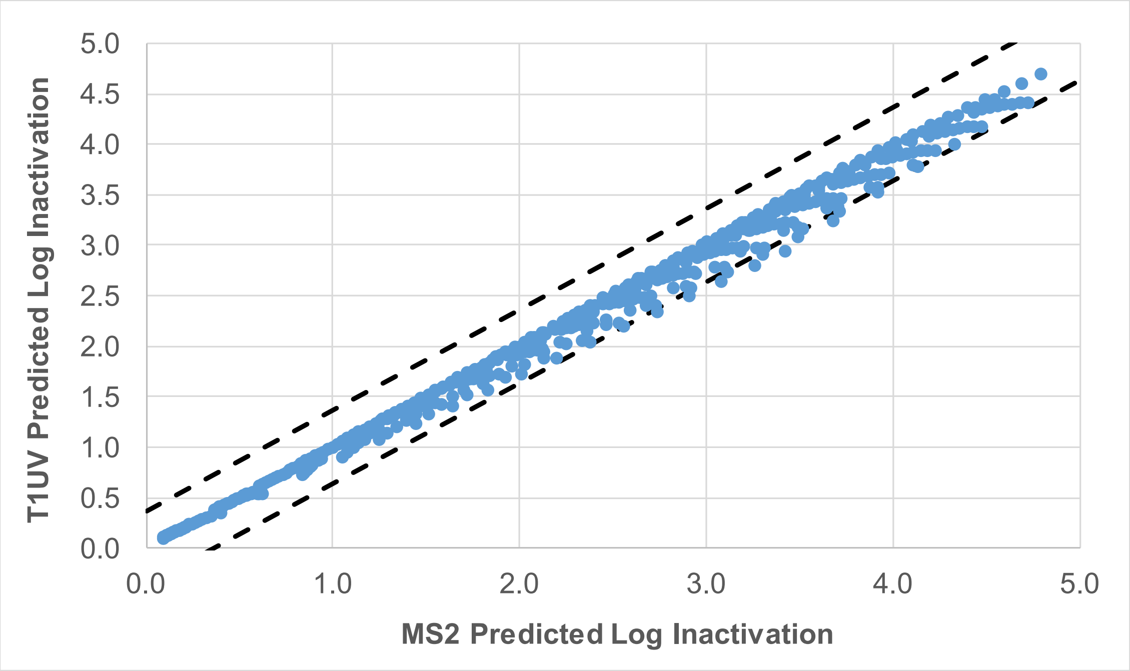

Figure 5.22a Comparison of MS2 Predicted Log Inactivation and T1UV Predicted Log Inactivation for the WF-115-4

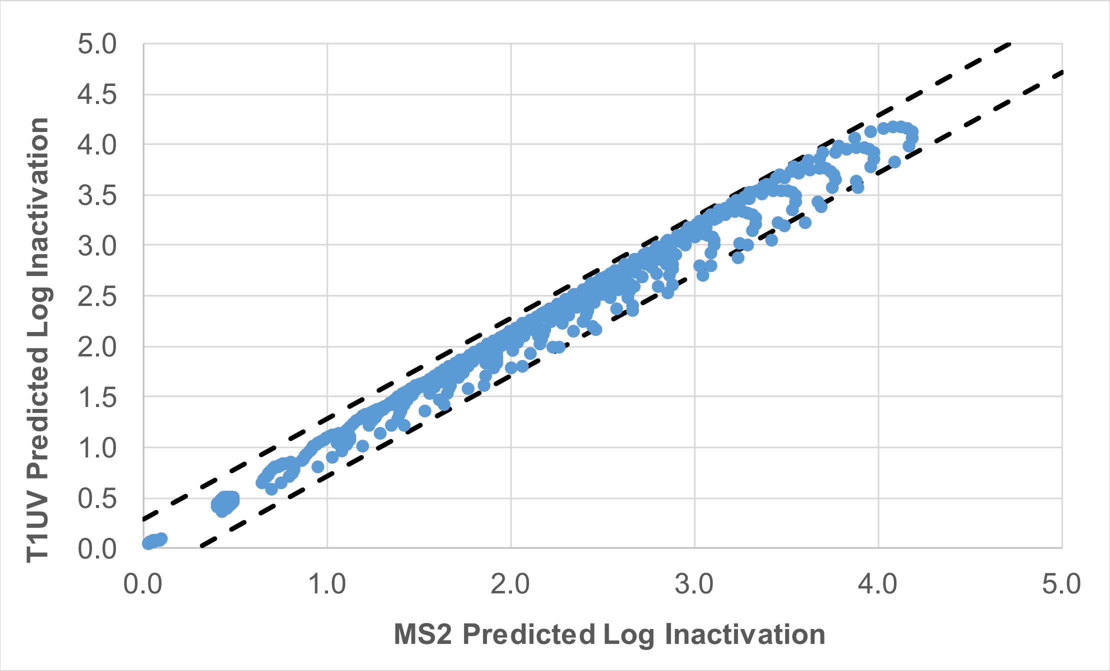

Figure 5.22b Comparison of MS2 Predicted Log Inactivation and T1UV Predicted Log Inactivation for the WF-125-6

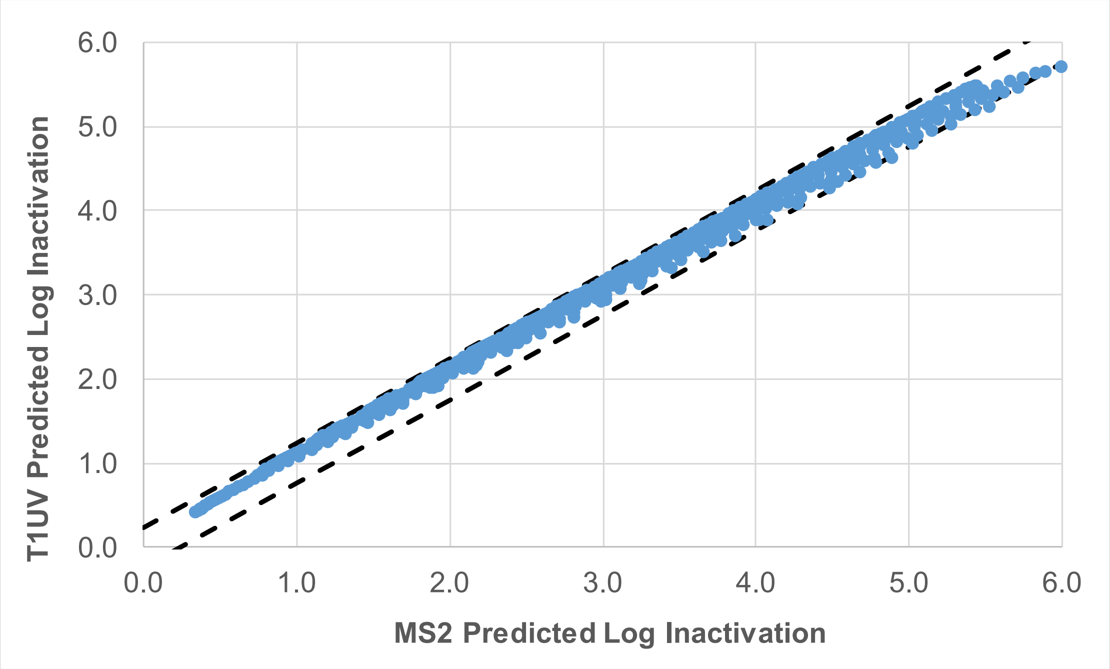

Figure 5.22c **Comparison of MS2 Predicted Log Inactivation and T1UV Predicted Log Inactivation for the WF-225-8**

The ability of the validation equation calibrated using data points with high values of S/S_0 to predict the log inactivation of data points with low values of S/S_0 and vice versa was evaluated using the following approach:

1. Equation 5.6 was calibrated using only data with S/S_0 values greater than 0.60 for the WF-115-4 UV reactor and greater than 0.80 for the WF-125-6 and WF-225-8 UV reactors.

2. Equation 5.6 was calibrated using only data with S/S_0 values less than 0.60 for the WF-115-4 UV reactor and greater than 0.80 for the WF-125-6 and WF-225-8 UV reactors..

3. The log inactivation was calculated using the two equations developed using Steps 1 and 2. The calculations were done over the validated range of UVTs and log inactivation common to both equations. The calculations were done from 70 to 98 percent UVT. The calculations were done in 1.0 percent UVT increments. The calculations were done at 17 discrete levels of the combined variable.

Figures 5.23a through 5.23c compare the log inactivation predicted by Equation 5.6 calibrated using data with high S/S_0 values to the log inactivation predicted by Equation 5.6 calibrated using data low S/S_0 values, for the WF-115-4, WF-125-6, and WF-225-8 reactors, respectively. The figures also includes the 95th percentile prediction interval for the predictions defined using the uncertainty of interpolation defined in Chapter 6. Greater than 95.5 percent of the data fell within the 95 percent prediction intervals for WF-115-4, WF-125-6, and WF-225-8 UV reactors.

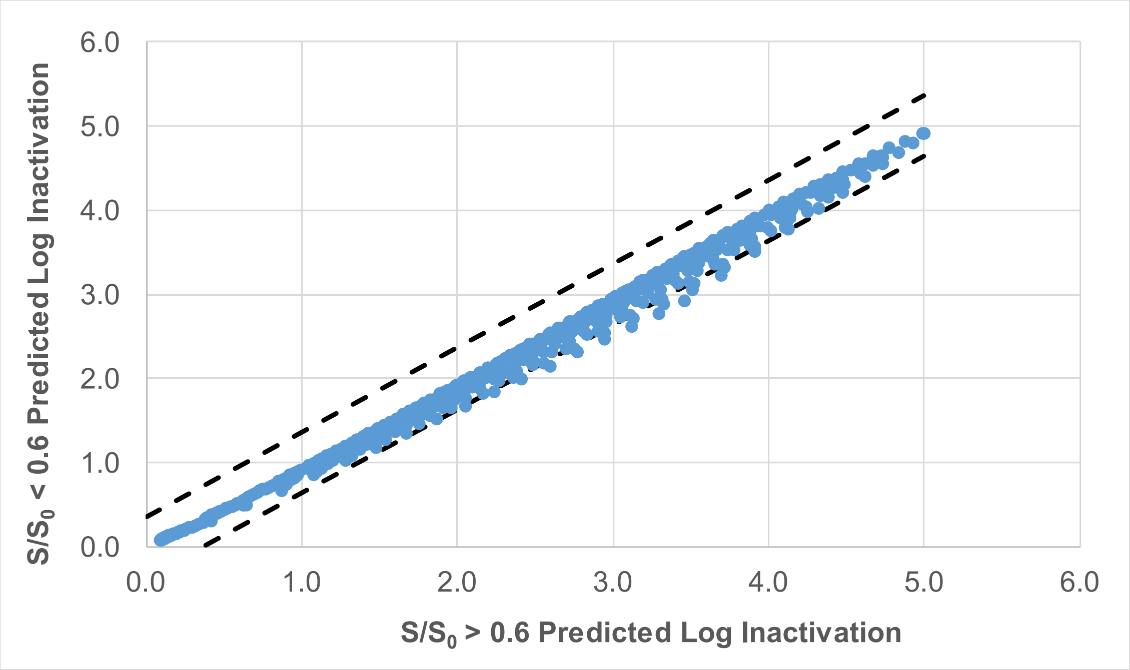

Figure 5.23a **Comparison of Equations Calibrated for High and Low S/S_0 values for the WF-115-4**

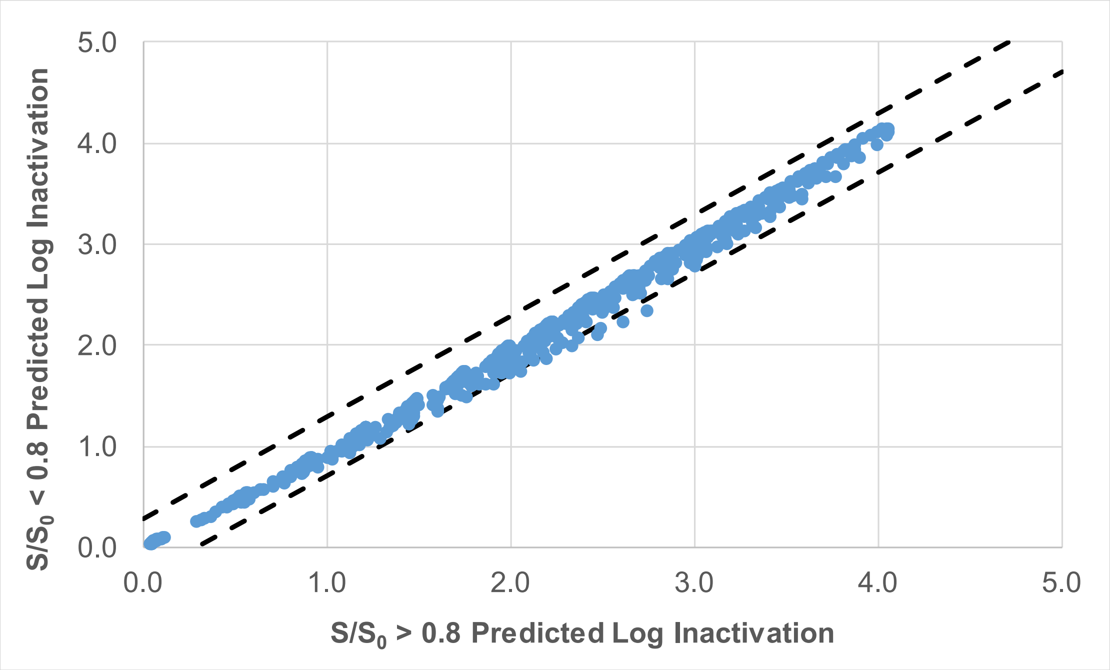

Figure 5.23b **Comparison of Equations Calibrated for High and Low S/S_0 values for the WF-125-6**

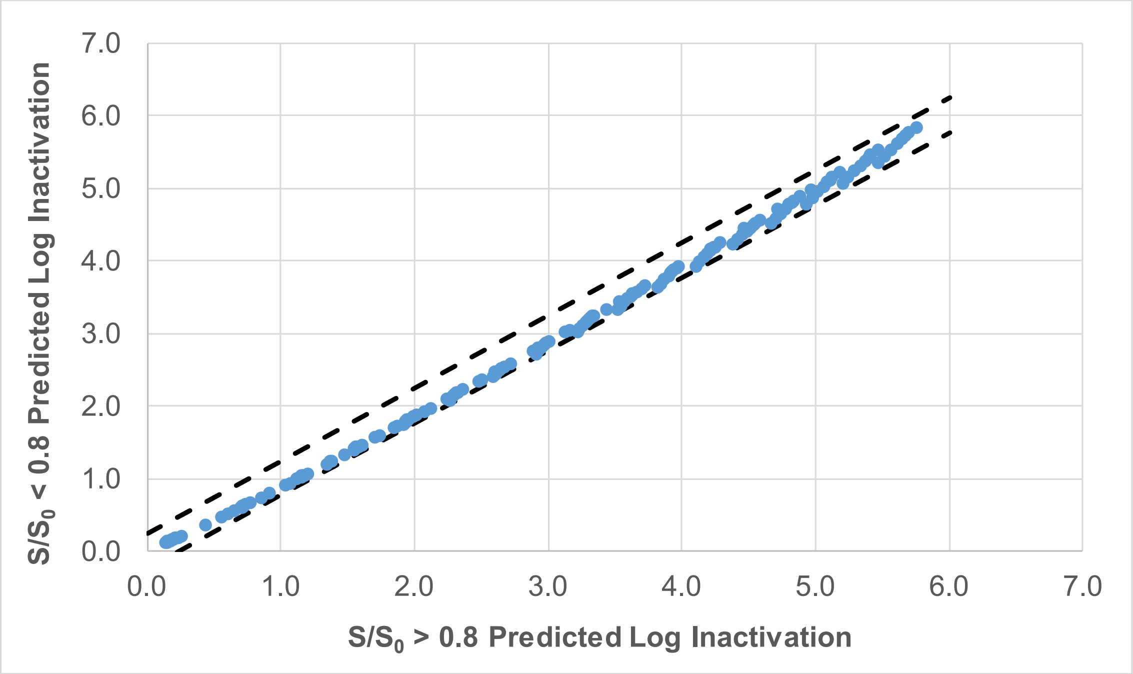

Figure 5.23c **Comparison of Equations Calibrated for High and Low S/S_0 values for the WF-225-8**

The USEPA document entitled "Innovative Approaches for Validation of Ultraviolet Disinfection Reactors for Drinking Water Systems" states if 95 percent of the predicted log inactivations with the comparison of the equations fall within the prediction interval, then Equation 5.6 calibrated with the full dataset can be used with confidence to provide valid predictions of log i within the validated range of log inactivation regardless of the values of D_L and S/S_0 used to define the combined variable. The evaluations provided in this section demonstrate that Equation 5.6 meets this criteria.

VALIDATION FACTORS AND UV DOSE MONITORING FOR DISINFECTION CREDIT

This chapter describes the determination of the validation factors and monitoring for obtaining UV disinfection credit using the ATG WF-115-4, WF-125-6, and WF-225-8 UV reactors.

6.1 REQUIRED UV DOSE

Table 6.1 tabulates the UV dose values required by the LT2ESWTR for 0.5 to 4.0 log inactivation of *Cryptosporidium*, Giardia, and virus. Table 6.1 also provides UV dose values for 4.5 to 6.0 log inactivation given in the USEPA draft document entitled "Innovative Approaches for Validation of Ultraviolet Disinfection Reactors for Drinking Water Systems." The LT2ESWTR states that UV reactors will achieve a given log inactivation when the validated UV dose indicated by an on-line dose monitoring system is equal to or greater than the required UV dose.

Table 6.1 UV Dose Requirements for Pathogen Inactivation Credit as Defined by the LT2ESWTR

Target Pathogens	**UV dose (mJ/cm²) required for a log inactivation of:**											
	0.5 log	**1.0 log**	**1.5 log**	**2.0 log**	**2.5 log**	**3.0 log**	**3.5 log**	**4.0 log**	**4.5 log**	**5.0 log**	**5.5 log**	**6.0 log**
Cryptosporidium	1.6	2.5	3.9	5.8	8.5	12	15	22	30	45	64	85
Giardia	1.5	2.1	3.0	5.2	7.7	11	15	22	28	42	60	84
Adenovirus	39	58	79	100	121	143	163	186	208	231	253	276

6.2 VALIDATION FACTORS

To obtain disinfection credit, the UV reactor must deliver a validated dose, D_{val}, that is equal to or greater than the required dose specified by the LT2ESWTR. The 2006 UVDGM states (page 5-42) that the validated dose, D_{val}, is related to the RED using:

$$D_{val} = RED / VF$$ **Equation 6.1**

where VF is the validation factor. The UVDGM also states (page 5-36) that the validation factor is determined using:

$$VF = B_{RED} \times B_{Poly} \times \left(1 + \frac{U_{Val}}{100}\right)$$ **Equation 6.2**

where B_{RED} is the RED bias factor, B_{poly} is the polychromatic bias factor, and U_{val} is the percent uncertainty of validation.

Substituting Equation 6.2 into Equation 6.1 gives:

$$D_{val} = \frac{RED}{B_{RED} \times B_{Poly} \times \left(1 + {}^{U_{val}}/_{100}\right)}$$ **Equation 6.3**

where the RED is predicted using Equation 5.18 or 5.19.

6.2.1 RED Bias

Equations 5.18 and 5.19 predict RED accounting for the UV sensitivity of the microbe, D_L. These equations can be used to predict the RED of the test microbes MS2 and T1UV phage by setting the value of D_L to the value expected with those microbes. Alternatively, these equations can be used to predict the RED of the target pathogen (e.g. *Cryptosporidium*) by setting the value of D_L to the value expected with that pathogen. With this analysis, it is assumed that the RED is predicted using the value of D_L set to UV sensitivity of the target pathogen. Section 5.8.1 (page 5-30) of the UVDGM states that if the validation equations are used to predict the RED delivered to the target pathogen, the RED bias can be set to 1.0.

6.2.2 Uncertainty of Validation

The UVDGM states on page 5-40 that the uncertainty of validation, U_{val}, is calculated as:

$$U_{val} = \sqrt{U_{IN}^2 + U_{DR}^2 + U_S^2}$$ **Equation 6.4**

where U_{IN} is the uncertainty of interpolation using the dose monitoring equation, U_{DR} is the uncertainty of the test microbe dose response, and U_S is the uncertainty of the UV sensors during validation.

6.2.2.1 Uncertainty of Interpolation

The UVDGM states on page 5-41 that U_{IN} is determined using:

$$U_{IN} = \frac{t \times SD}{RED} \times 100\%$$ **Equation 6.5**

where SD is the standard deviation of the differences between the measured and predicted REDs, and t is a t-statistic at a 95 percent confidence level for N - P degrees of freedom where N is the number of data points used with the regression analysis and P is the number of coefficients used by the UV dose monitoring equation and obtained from the regression analysis.

The validation data measured using MS2 and T1UV phage was fit using Equation 5.6. Equation 5.6 predicts log inactivation of the test microbes as opposed to RED. As such, the residuals of the fit, shown in Figures 5.9b, 5.10b, and 5.11b, are defined in terms of log inactivation units as opposed to RED units. The standard deviation of the residuals in units of RED can be determined using:

$$SD = D_L \times SD' \qquad \textbf{Equation 6.6}$$

where SD’ is the standard deviation in units of log inactivation.

Substitution of Equation 6.6 into 6.5 gives:

$$U_{IN} = \frac{t \times D_L \times SD'}{RED} \times 100\% \qquad \textbf{Equation 6.7}$$

The uncertainty of interpolation in units of log inactivation is:

$$U'_{IN} = t \times SD' \qquad \textbf{Equation 6.8}$$

Table 6.2 gives the values of the standard deviation and t-statistic used as inputs to Equation 6.8. The t-statistic was calculated using P=4 for the WF-115-4 and P=5 for the WF-125-6 and WF-225-8, which is representative of the number of coefficients used with Equation 5.6 for each reactor.

Table 6.2 Uncertainty of Interpolation for Predicting Log Inactivation

Parameter	WF-115-4	WF-125-6	WF-225-8
Number of Data Points, N	78	75	61
Number of Parameters, P	4	5	5
Student’s t-statistic	1.9925	1.9944	2.0032
Equation 5.6 St. Dev.	0.18318	0.14416	0.11966
U'_{IN}	0.36499	0.28753	0.23971

6.2.2.2 Uncertainty of UV Sensors

Section 5.5.4 (page 5-19) of the UVDGM states that U_S can be defined as the largest difference observed between the duty and reference UV sensors. This definition assumes that the uncertainty of the reference UV sensors is zero. Section 5.9.2 (page 5-40) of the UVDGM states that the value of U_S used in the calculation of the validation factor can be set to zero if U_S is less than 10 percent.

As shown in Figure 5.2, the differences between the average duty UV sensors and the average reference UV sensor reading had an average and standard deviation of -1.34 and 2.42 percent, respectively, and ranged from -6.34 to 1.31 percent. The differences were all within the 10 percent criteria for reference UV sensor checks given in the 2006 UVDGM, and the value of U_S was set to zero.

6.2.2.3 Uncertainty of UV Dose Response

Section C.4 (page C-10) of the UVDGM states that the uncertainty of the test microbe dose-response can be determined using:

$$U_{DR} = \frac{CI}{UVDose} \times 100\% \qquad \textbf{Equation 6.9}$$

where CI is the confidence interval at the specified dose calculated using statistical approaches (e.g., Draper and Smith, 1998). The UV dose value is predicted as a function of log inactivation using Equation 5.6 and the UV dose coefficients of the collimated beam dose response curve, as tabulated in Tables 5.3 and 5.4. The UVDGM also states that the value of U_{DR} used in the calculation of the validation factor can be set to zero if U_{DR} calculated as a confidence interval is less than 15 percent of the RED.

Figures 6.1a and 6.1b show the uncertainty of the UV dose-response for MS2 and T1UV phage, respectively, calculated as a confidence interval using the statistical approach provided in Appendix I. Table 6.3 shows the value of U_{DR} at 1 log.

Figure 6.1c shows the uncertainty of the UV dose-response for all microbes on one plot. Since the uncertainty of all of the UV dose-response curves was less than 15 percent, the most conservative uncertainty (March 19, 2019) was modeled using a quadratic fit:

$$U_{DR} = A + B(\log i) + C(\log i)^2 \qquad \textbf{Equation 6.10}$$

where A = 12.34, B = -3.514, and C = 0.3197.

If the U_{DR}, calculated using Equation 6.10, is greater than 15 percent, then that calculated value of U_{DR} is to be used in Equation 6.4. If the U_{DR} is less than 15 percent, then the U_{DR} value in Equation 6.4 is set to zero.

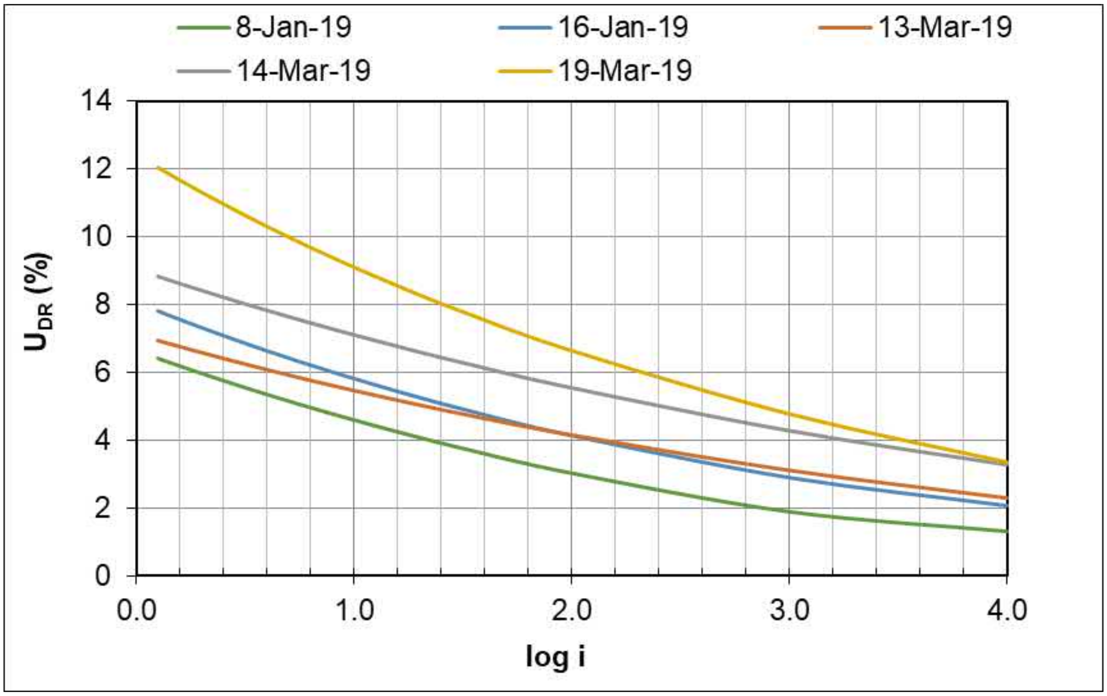

Figure 6.1a Uncertainty of the UV Dose-Response of MS2 as a Function of log i

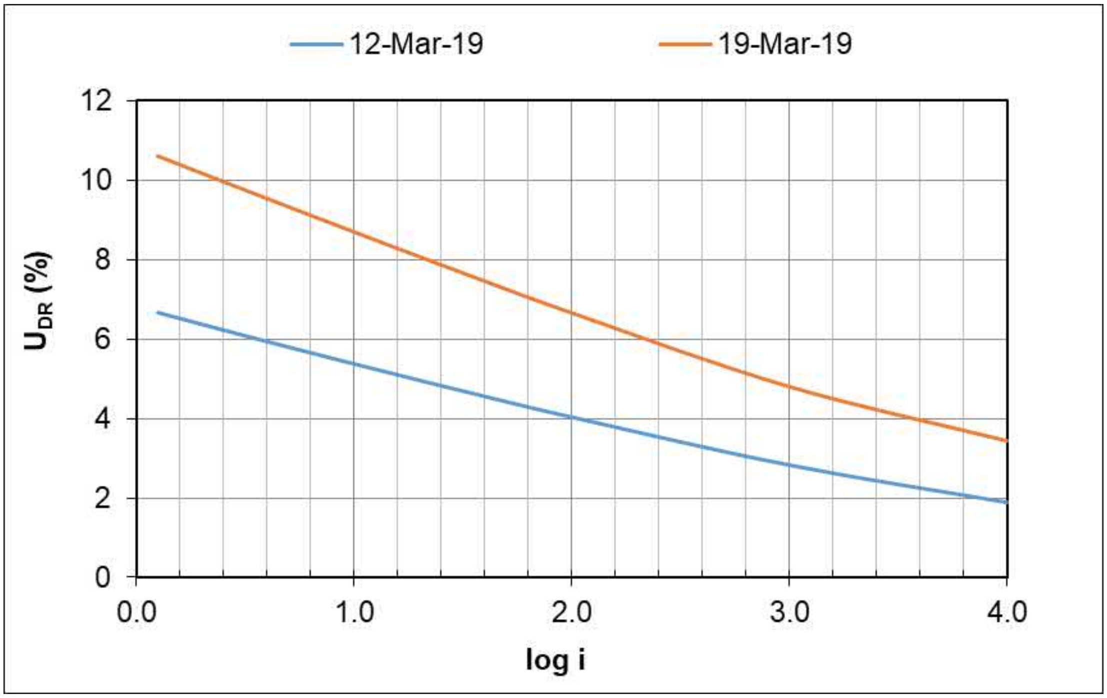

Figure 6.1b Uncertainty of the UV Dose-Response of T1UV as a Function of log i

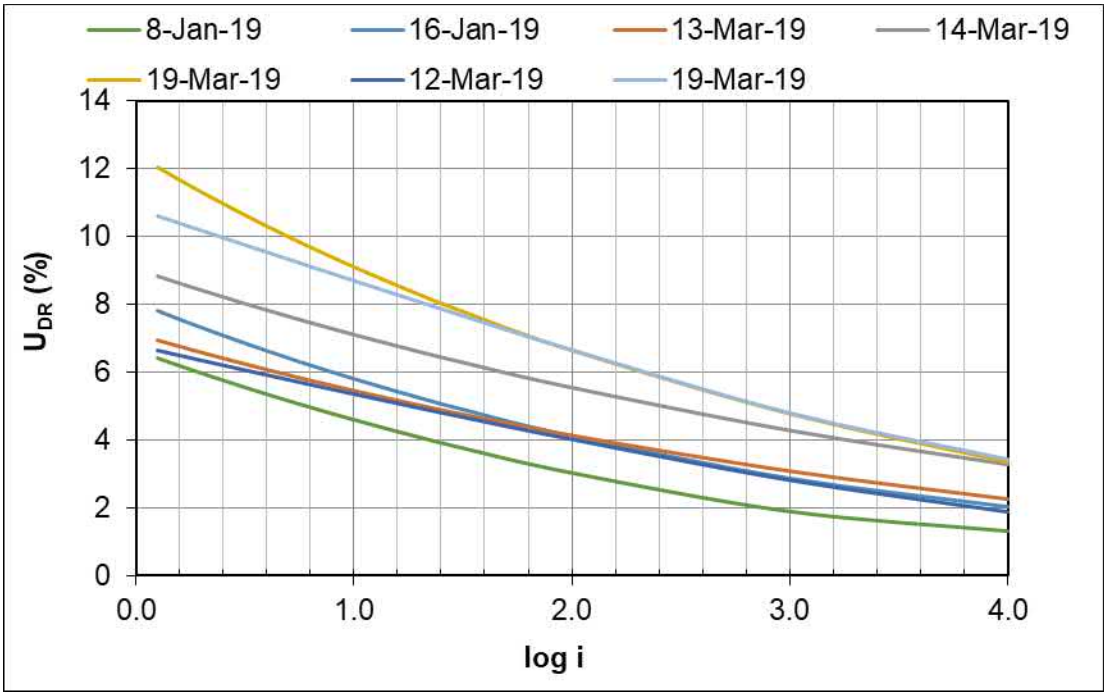

Figure 6.1c **Uncertainty of the UV Dose-Response as a Function of log i for all microbes**

Table 6.3 **U_{DR} at 1-log Inactivation**

Test Microbe	Date	Sample ID	U_{DR} at 1-log (%)	Coefficient A	Coefficient B
MS2	1/8/2019	101	4.60	15.626	2.023
MS2	1/16/2019	409	5.80	15.302	2.283
MS2	3/13/2019	407	5.46	16.351	2.013
MS2	3/14/2019	617	7.11	16.530	1.795
MS2	3/19/2019	819	9.10	14.725	2.465
T1UV	3/12/2019	416	5.37	4.534	0.97917
T1UV	3/19/2019	820	8.70	4.875	0

6.2.3 Polychromatic Bias

The polychromatic bias accounts for spectral differences between validation and operation of the UV system for pathogen inactivation credit at the water treatment plant. The polychromatic bias only occurs with UV systems using polychromatic lamps and can be caused by:

1. Differences in the spectral response or action spectra of the test microbes used during validation and the target pathogen.

2. Spectral changes in UV lamp output due to lamp and quartz sleeve aging and fouling.

3. Differences in the UV absorbance spectra during validation and with application at the WTP

6.2.3.1 Action Spectra

Water Research Foundation (WRF) Project 4376 found that while the action spectra of MS2 and *Cryptosporidium* at wavelengths above 240 nm are similar, the action spectrum of MS2 phage is greater than that of *Cryptosporidium* at wavelengths below 240 nm, as shown in Figure 6.2. If wavelengths below 240 nm significantly contribute to UV dose delivery measured during validation, validation conducted using MS2 phage will overstate the inactivation expected with *Cryptosporidium*. A similar issue with action spectra differences exists with T1UV phage and *Cryptosporidium*.

The difference between the action spectra of MS2 and *Cryptosporidium* at wavelengths below 240 nm is not addressed by the UVDGM. Instead, the UVDGM states that the action spectra of *Cryptosporidium* and MS2 phage are similar enough that no action spectra correction factor is required. However, this conclusion is based on an analysis of the germicidal UV output of MP lamps as provided in the 2003 draft UVDGM. That analysis was based on a MP lamp that had negligible UV output (below 240 nm) and is not applicable with today's MP lamps.

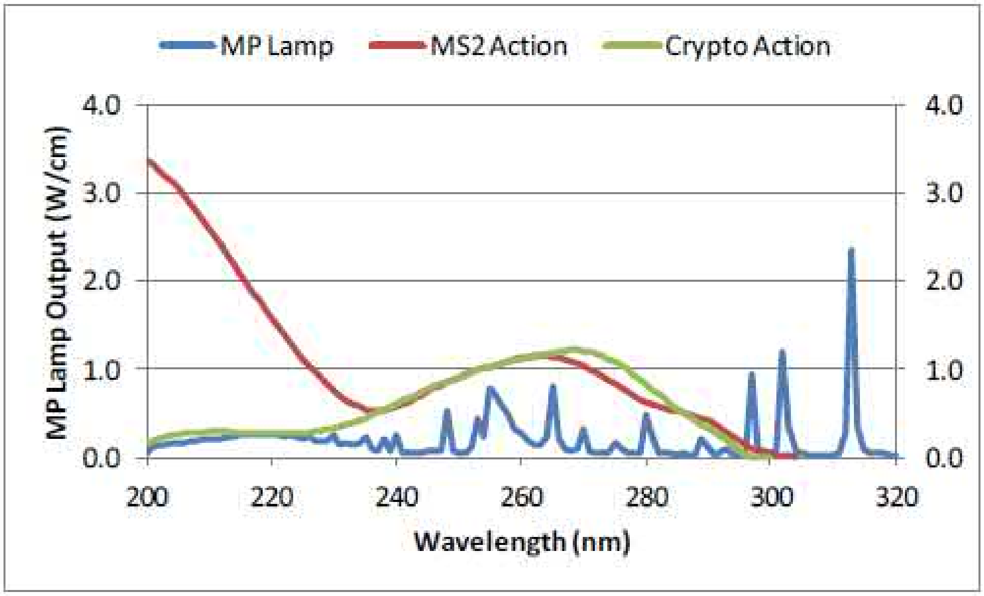

Figure 6.2 Comparison of wavelength response of MS2 phage and *Cryptosporidium* (Source: WRF Project 4376)

The action spectrum of a microbe is obtained by measuring the microbe's UV dose response at different wavelengths and plotting the UV sensitivity as a function of wavelength. The UVDGM states that the relative impact of the microbe's action spectra on dose delivery by a UV reactor may be estimated by calculating the lamp's germicidal output, Pg, using:

$$P_G = \sum_{\lambda=200nm}^{320} P(\lambda)G(\lambda)\Delta\lambda$$

Equation 6.11

where P(λ) is the UV output of the lamp as a function of wavelength, λ, and G(λ) is the action spectra of the microbe. The UVDGM states the ratio of the germicidal output defined using the action spectra of the validation test microbe to that defined using the action spectra of the pathogen (such as adenovirus or *Cryptosporidium*) may be used to define an action spectra correction factor (ASCF) that is applied to the UV dose algorithms developed through validation.

The UVDGM approach for calculating the ASCF does not account for the impact of the sleeve UV transmittance (UVT) and the UV absorbance of the water during validation. To address this issue, WRF Project 4376 developed tables of ASCF values that can be generally applied to UV systems using polychromatic medium-pressure lamps. Appendix B of the final report for Project 4376 provides ASCF values for Cryptosporidium and Giardia credit for five validation water types, four of which are used at the Portland UV Validation Facility. With each water type, ASCF values are provided for the UV reactor equipped with Type 219, Type 214, or synthetic quartz sleeves. With each water and sleeve type, ASCF values are provided for six validation test microbes, including MS2 and T1UV phage.

Figure 6.3 shows the average measured absorbance spectra during the validation of the WF-115-4, WF-125-6, and WF-225-8 reactors at various UVTs. When using the ASCFs from Appendix B of WRF Project 4376, the absorbance spectra of the chosen test water should closely match the absorbance spectra measured during validation. To minimize the differences in the measured absorbance spectra with this validation to the absorbance spectra of any one test water from WRF Project 4376, a combination test water was used. This method identified the degree to which the absorbance spectra of the five test waters from WRF Project 4376 were representative of the absorbance spectra measured during validation. At each UVT shown in Figure 6.3, a weighting factor between 0 and 1 was calculated for each test water to represent the degree to which it matched the absorbance spectra measured during validation. The weighting factor for each test water was then used to calculate an average weighted ASCF at each UVT.

Figures 6.4a and 6.4b show the absorbance spectra of the combination water used to calculate the ASCFs. These figures also include the average UV absorbance spectra of the water used with the validation of the WF-115-4, WF-125-6, and WF-225-8 UV reactors. As shown, the UV absorbance spectra measured with this validation matched the UV absorbance of the combination water for a given UVT. The absorbance spectra for all five test waters are provided in Appendix A of the final report for Project 4376. Those absorbance spectra were used to calculate the ASCF values tabulated in Appendix B of Project 4376.

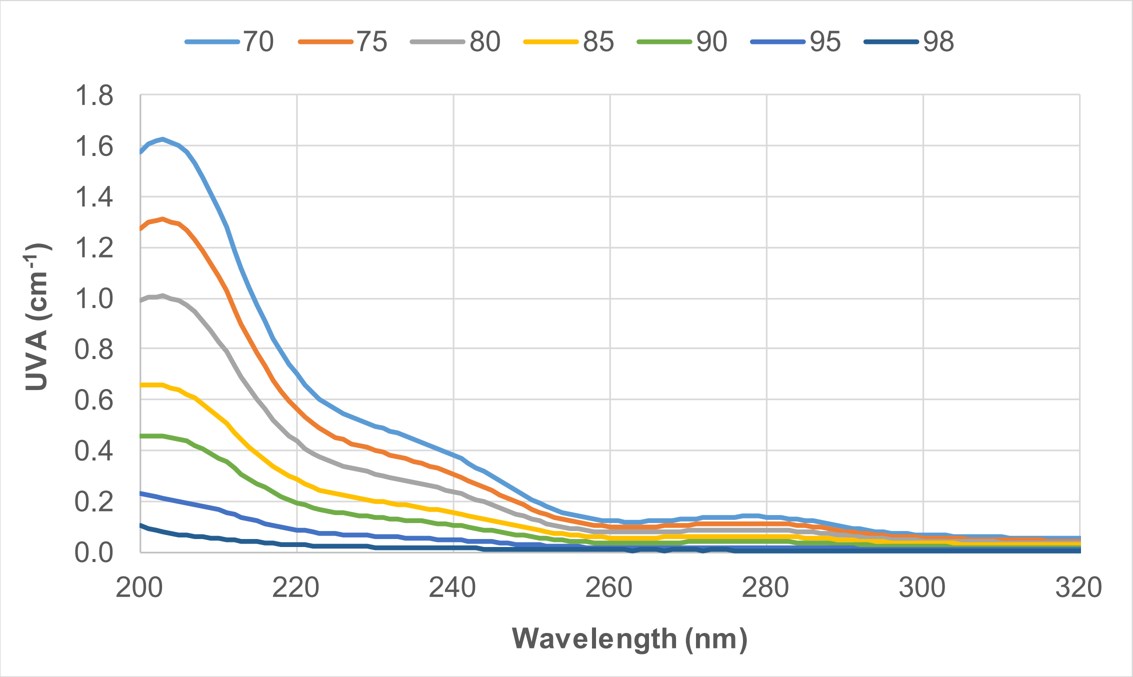

Figure 6.3 **Averaged UV Absorbance Spectra Measured during this Validation**

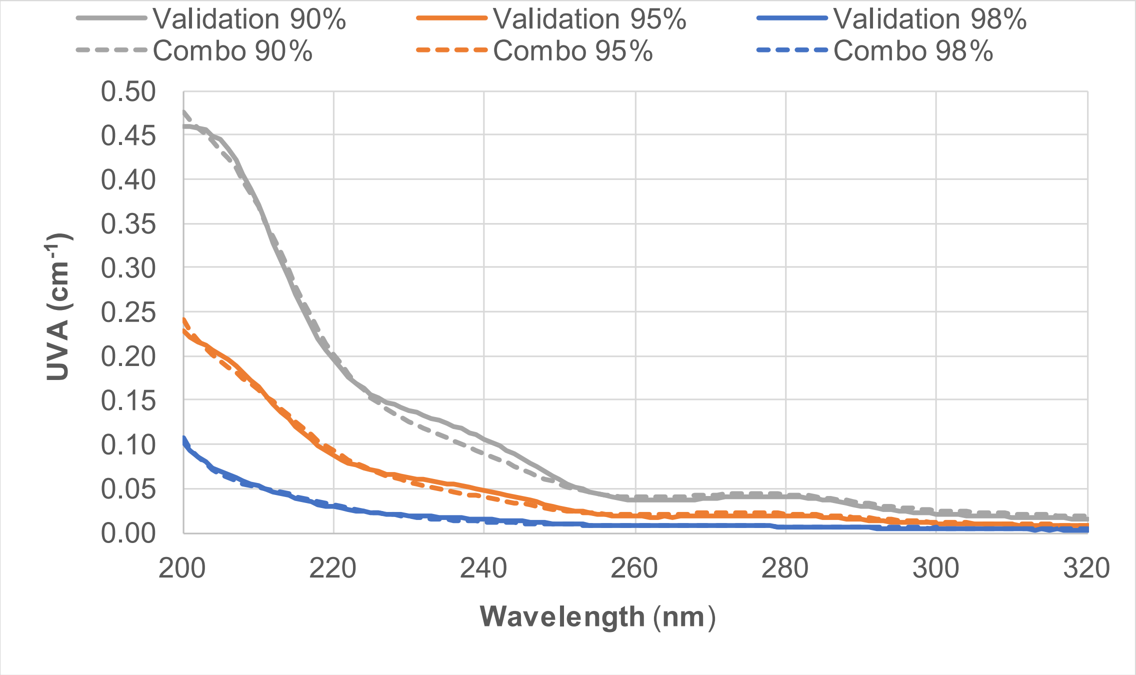

Figure 6.4a **UV Absorbance Spectra of Combination Water from WRF Project 4376 and UV Absorbance Spectra of Water Measured during this Validation**

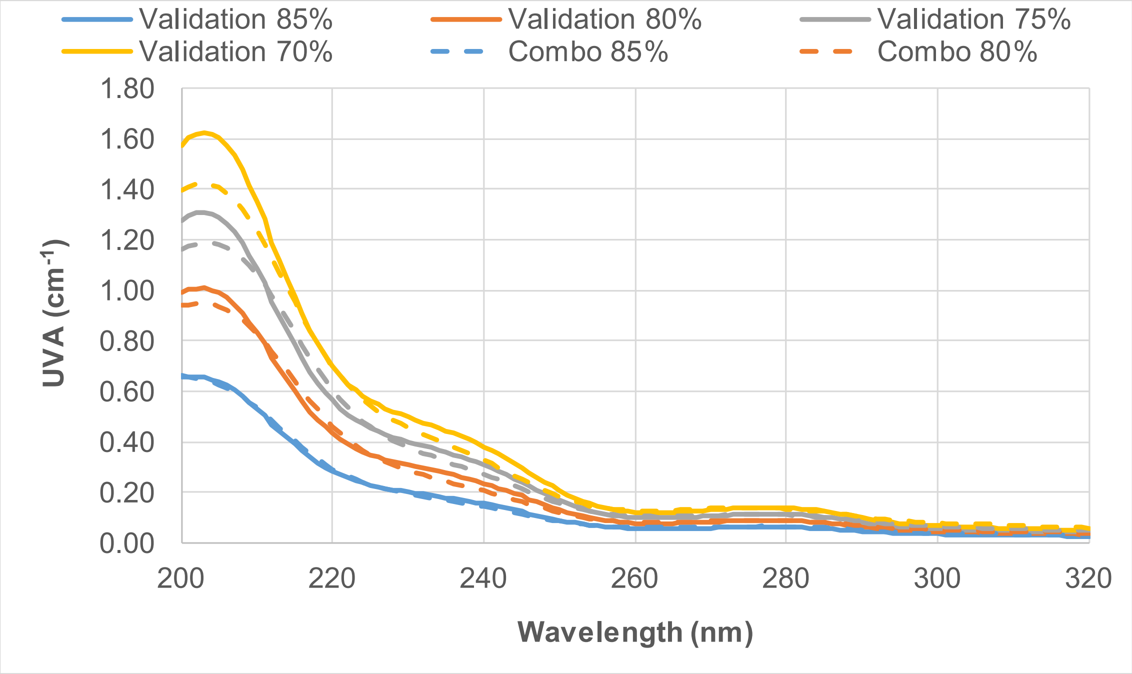

Figure 6.4b **UV Absorbance Spectra of Combination Water from WRF Project 4376 and UV Absorbance Spectra of Water Measured during this Validation**

The WF-115-4, WF-125-6, and WF-225-8 UV reactors used Type 214 sleeves during validation. Figure 6.5 compares the UV transmittance of the Type 214 quartz sleeves used by the reactors with this validation to the UV transmittance of the Type 214 quartz sleeve used to calculate ASCF values with Project 4376.

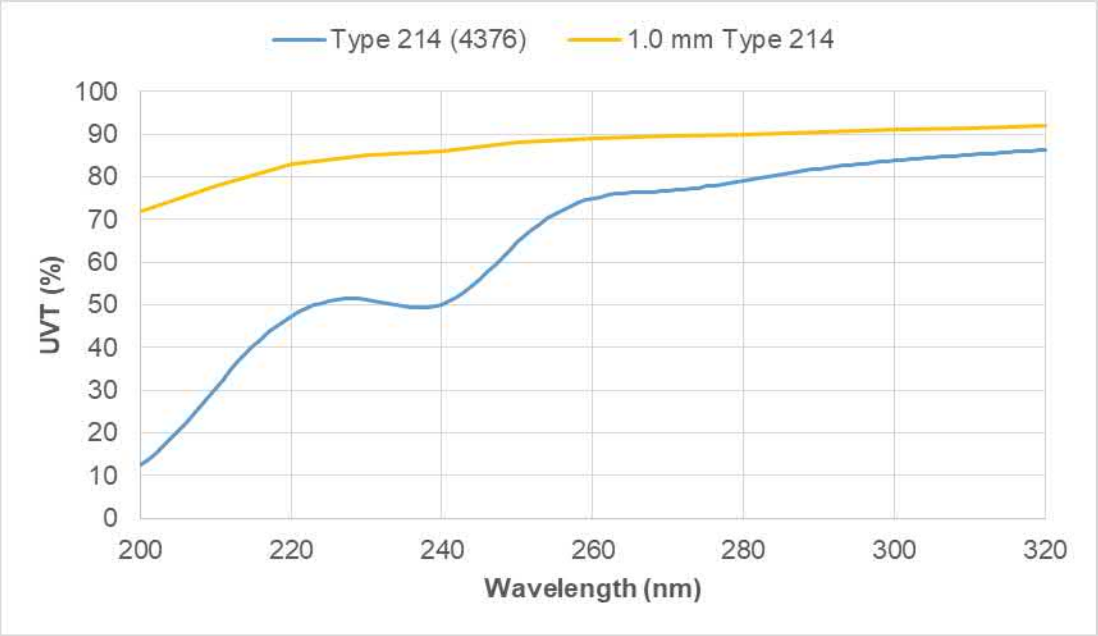

Figure 6.5 **UV Transmittance of the Type 214 Quartz Sleeves used during Validation and Type 219 Quartz Sleeves used in Project 4376**

Table 6.4 gives the weighted ASCF values, which are calculated for a given UVT using:

$$ASCF =$$
$$\{[(ASCF_{MS2\ BLA\ SH} \times WF_1 + ASCF_{MS2\ SGA\ SH} \times WF_2 + ASCF_{MS2\ NY\ LSA} \times WF_3 + ASCF_{MS2\ BLA\ LSA} \times WF_4 + ASC$$
$$\div (N_{MS2} + N_{T1UV})$$

Equation 6.12

$ASCF_{MS2}$ or $ASCF_{T1UV}$ represent the ASCF associated with MS2 and T1UV, respectively. These values, taken from Appendix B of WRF Project 4376, are relative to a test water, a target microbe, and a sleeve type. N_{MS2} and N_{T1UV} are the number of MS2 and T1UV runs, respectively, where an absorbance spectra scan was done. In this case, N_{MS2} is 37 and N_{T1UV} is 26. WF_1 through WF_5 are the weighting factors associated with the test water specified in that term. The weighting factors can be seen in Table 6.4.

Table 6.4 ASCF Weighting Factors Associated with Each Water Type

Weighting Factor	Water Type	UVTs						
		70.0	75.0	80.0	85.0	89.2	94.5	98.1
WF_1	BLA-SH	0	0	0	0	0	0	0.02360
WF_2	SGA-SH	0	0	0	0.00472	0	0	0.04565
WF_3	NY-LSA	0.59173	0.62901	0.74739	0.90680	0.88415	0.62999	0.09148
WF_4	BLA - LSA	0.40827	0.37068	0.25261	0	0.04565	0.02244	0.03308
WF_5	SGA-LSA	0	0	0	0.08805	0.07019	0.34649	0.81910

Equation 6.12 was used to calculate a weighted ASCF for *Cryptosporidium* and adenovirus at log inactivation values between 0.5 and 4, and at UVTs ranging from 70 percent to 98 percent. Equation 6.12 was also used to calculate a weighted ASCF for MS2 at REDs between 10 and 80 mJ/cm^2 and at UVTs ranging from 70 percent to 98 percent. Tables 6.5, 6.6, and 6.7 show the weighted ASCF values for *Cryptosporidium*, adenovirus, and MS2, respectively. The ASCF for a given UVT was defined as the average of the ASCFs calculated for various log inactivations at that UVT as shown in Table 6.8.

Table 6.5 ASCF Values for Cryptosporidium and Giardia Credit					
Credit	**UVT (%)**	**Weighted ASCF**	**Credit**	**UVT (%)**	**Weighted ASCF**
0.5	70	1.037	2.5	70	0.985
0.5	75	1.053	2.5	75	1.014
0.5	80	1.077	2.5	80	1.049
0.5	85	1.144	2.5	85	1.125
0.5	90	1.225	2.5	90	1.211
0.5	95	1.424	2.5	95	1.406
0.5	98	1.746	2.5	98	1.712
1.0	70	1.007	3.0	70	0.985
1.0	75	1.029	3.0	75	1.014
1.0	80	1.065	3.0	80	1.049
1.0	85	1.134	3.0	85	1.125
1.0	90	1.220	3.0	90	1.211
1.0	95	1.415	3.0	95	1.403
1.0	98	1.730	3.0	98	1.708
1.5	70	0.994	3.5	70	0.985
1.5	75	1.021	3.5	75	1.014
1.5	80	1.058	3.5	80	1.049
1.5	85	1.130	3.5	85	1.125
1.5	90	1.215	3.5	90	1.211
1.5	95	1.411	3.5	95	1.399
1.5	98	1.724	3.5	98	1.707
2.0	70	0.988	4.0	70	0.985
2.0	75	1.014	4.0	75	1.014
2.0	80	1.054	4.0	80	1.049
2.0	85	1.125	4.0	85	1.125
2.0	90	1.211	4.0	90	1.211
2.0	95	1.408	4.0	95	1.399
2.0	98	1.720	4.0	98	1.704

Table 6.6 ASCF Values for Adenovirus Credit

Credit	UVT (%)	Weighted ASCF	Credit	UVT (%)	Weighted ASCF
0.5	70	1.013	2.5	70	0.956
0.5	75	1.009	2.5	75	0.967
0.5	80	1.020	2.5	80	0.995
0.5	85	1.069	2.5	85	1.050
0.5	90	1.135	2.5	90	1.121
0.5	95	1.317	2.5	95	1.292
0.5	98	1.609	2.5	98	1.571
1.0	70	0.987	3.0	70	0.950
1.0	75	0.989	3.0	75	0.963
1.0	80	1.007	3.0	80	0.990
1.0	85	1.060	3.0	85	1.050
1.0	90	1.131	3.0	90	1.121
1.0	95	1.307	3.0	95	1.288
1.0	98	1.593	3.0	98	1.567
1.5	70	0.975	3.5	70	0.943
1.5	75	0.979	3.5	75	0.959
1.5	80	1.001	3.5	80	0.990
1.5	85	1.054	3.5	85	1.045
1.5	90	1.125	3.5	90	1.121
1.5	95	1.303	3.5	95	1.288
1.5	98	1.583	3.5	98	1.564
2.0	70	0.961	4.0	70	0.940
2.0	75	0.975	4.0	75	0.959
2.0	80	0.997	4.0	80	0.985
2.0	85	1.054	4.0	85	1.045
2.0	90	1.125	4.0	90	1.121
2.0	95	1.297	4.0	95	1.286
2.0	98	1.579	4.0	98	1.560

Table 6.7 ASCF Values for MS2 Credit					
RED (mJ/cm^2)	**UVT (%)**	**Weighted ASCF**	**RED (mJ/cm^2)**	**UVT (%)**	**Weighted ASCF**
10	70	1.151	50	70	1.058
10	75	1.145	50	75	1.079
10	80	1.157	50	80	1.110
10	85	1.213	50	85	1.185
10	90	1.289	50	90	1.278
10	95	1.491	50	95	1.481
10	98	1.834	50	98	1.820
20	70	1.110	60	70	1.048
20	75	1.109	60	75	1.069
20	80	1.137	60	80	1.107
20	85	1.204	60	85	1.185
20	90	1.288	60	90	1.278
20	95	1.491	60	95	1.481
20	98	1.827	60	98	1.820
30	70	1.084	70	70	1.042
30	75	1.099	70	75	1.062
30	80	1.120	70	80	1.100
30	85	1.194	70	85	1.184
30	90	1.278	70	90	1.269
30	95	1.488	70	95	1.481
30	98	1.819	70	98	1.813
40	70	1.068	80	70	1.032
40	75	1.082	80	75	1.059
40	80	1.117	80	80	1.097
40	85	1.194	80	85	1.184
40	90	1.278	80	90	1.269
40	95	1.488	80	95	1.481
40	98	1.820	80	98	1.813

Table 6.8	Average Weighted ASCF Values		
UVT	***Cryptosporidium/* Giardia**	**Adenovirus**	**MS2**
70	0.9998	0.9658	1.074
75	1.026	0.9773	1.091
80	1.065	1.005	1.127
85	1.140	1.062	1.203
90	1.239	1.147	1.304
95	1.447	1.333	1.527
98	1.627	1.501	1.728

To define the ASCF at any UVT within the validated range, the values in Table 6.8 were modelled as a function of UVT and fitted with fifth order polynomial:

$$ASCF = A \times UVT^5 + B \times UVT^4 + C \times UVT^3 + D \times UVT^2 + E \times UVT + F \qquad \textbf{Equation 6.13}$$

where the coefficients A through F are provided in Table 6.9 for *Cryptosporidium*/Giardia, adenovirus, and MS2. The equations have R-squared values greater than 0.9996.

Table 6.9	Coefficient Values for Predicting ASCF (Equation 6.13)		
Coefficient	***Cryptosporidium/* Giardia**	**Adenovirus**	**MS2**
A	-3.9384×10^{-8}	-3.2526×10^{-8}	-2.5855×10^{-8}
B	1.7789×10^{-5}	1.5011×10^{-5}	1.2579×10^{-5}
C	-3.1495×10^{-03}	-2.7035×10^{-03}	-2.3525×10^{-03}
D	2.7477×10^{-01}	2.3923×10^{-01}	2.1434×10^{-01}
E	$-1.1846 \times 10^{+01}$	$-1.0445 \times 10^{+01}$	$-9.5819 \times 10^{+00}$
F	$2.0327 \times 10^{+02}$	$1.8141 \times 10^{+02}$	$1.6989 \times 10^{+02}$

The ASCF values are applied during the calculation of the validation factor with:

$$VF = B_{RED} \times U_{Val} \times ASCF \qquad \textbf{Equation 6.14}$$

6.2.3.2 Lamp Aging and Fouling

The 2003 UVDGM discusses the polychromatic bias caused by spectral changes in UV lamp output due to lamp and quartz sleeve aging. The 2003 UVDGM states the bias is minor (e.g., ~ 3 percent) if the UV reactor uses a germicidal UV sensor. As indicated in Section 2, the WF-115-4, WF-125-6, and WF-225-8 UV reactors use a germicidal UV sensor. Hence, this bias is small and can be ignored.

UVT Spectra

Section D.4.3 of the 2006 UVDGM describes approaches for evaluating and accounting for the polychromatic bias caused by differences in the UVT spectra of the test water and the water treated at the water treatment plant. The UVDGM states this bias can occur if a germicidal UV sensor is located further from the lamps than the ideal location for dose monitoring using the UV intensity setpoint approach.

The WF-115-4, WF-125-6, and WF-225-8 reactors do not have the ability to adjust their water layer, so the optimal water layer could not be determined. If the UV sensor are at the optimal locations, the polychromatic bias caused by differences in the UVT spectra of the test water and the water treated at the water treatment plant is small and can be ignored.

6.3 VALIDATED UV DOSE FOR PATHOGEN CREDIT

Equation 5.19 was used to predict *Cryptosporidium*, Giardia, and adenovirus REDs as a function of S/Q and UVTs ranging from 70 to 98 percent in 5 percent increments. The calculations used the pathogen D_L as defined by Equation 5.22. The UV sensor values, S, were determined using Equation 5.2. The validated doses were defined using Equation 6.1. The UVT that gave the minimum validated dose was defined at each value of S/Q. The minimum validated dose was fitted as a function of S/Q using a power fit function.

Figures 6.6a, 6.6b, and 6.6c show the validated doses for *Cryptosporidium*, Giardia, and adenovirus, respectively, as a function of S/Q at UVTs of 70 to 98 percent for the WF-115-4 reactor. Figure 6.7 and 6.8 show similar validated doses for the WF-125-6 and WF-225-8, respectively. The figures also show the relation and equation that defines the minimum validated dose as a function of S/Q. These power fit equations (shown by Equation 6.15) and the coefficients in Table 6.10 can be used for UV dose monitoring for disinfection credit.

$$Validated\ Dose = a \times \left({}^{S}/_{Q}\right)^{b} \qquad \textbf{Equation 6.15}$$

Table 6.10 Cryptosporidium, Giardia, and Adenovirus Coefficients for Equation 6.15

UV Reactor	Cryptosporidium Coefficients		Giardia Coefficients		Adenovirus Coefficients	
	a	**b**	**a**	**b**	**a**	**b**
WF-115-4	6.9873	0.97461	6.9587	0.97672	8.4427	0.94635
WF-125-6	37.222	0.97339	37.211	0.97597	45.247	0.91387
WF-225-8	40.791	0.96694	40.784	0.97009	50.728	0.89337

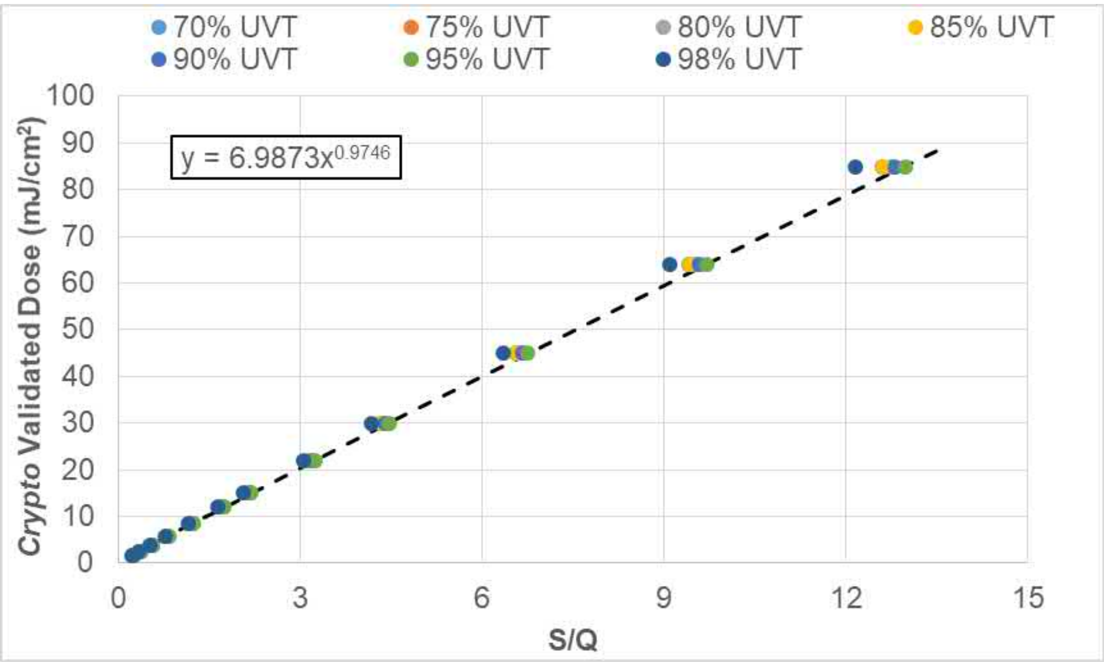

Figure 6.6a ***Cryptosporidium*** **Validated Dose as a function of S/Q for the WF-115-4.** ***Dashed line shows minimum validated dose as a function of S/Q.***

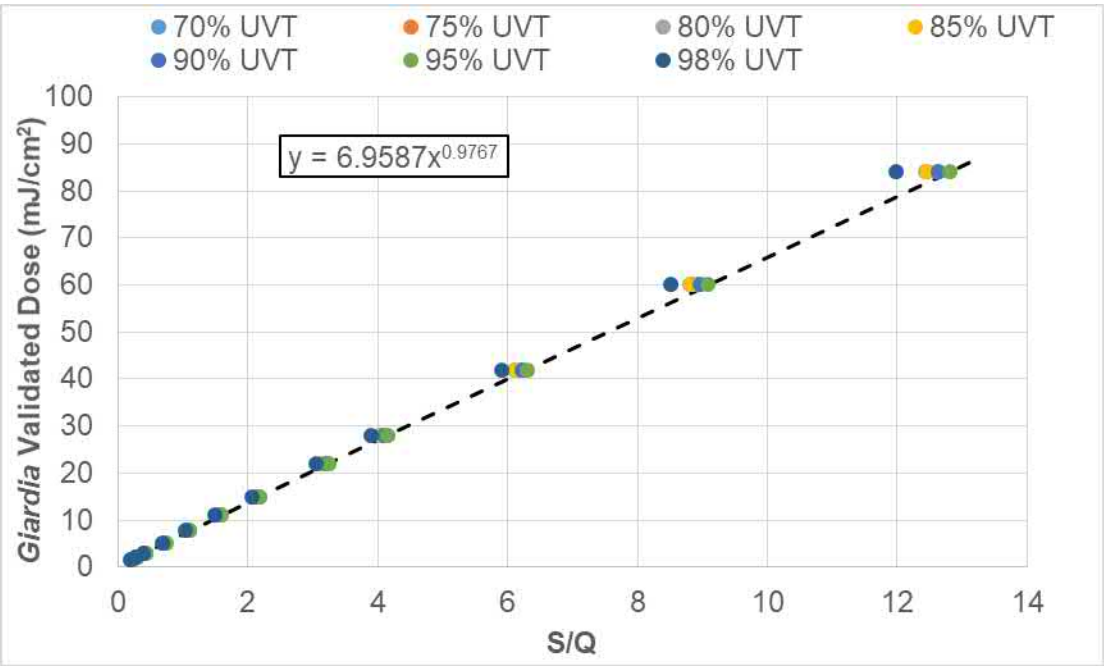

Figure 6.6b **Giardia Validated Dose as a function of S/Q for the WF-115-4.** ***Dashed line shows minimum validated dose as a function of S/Q.***

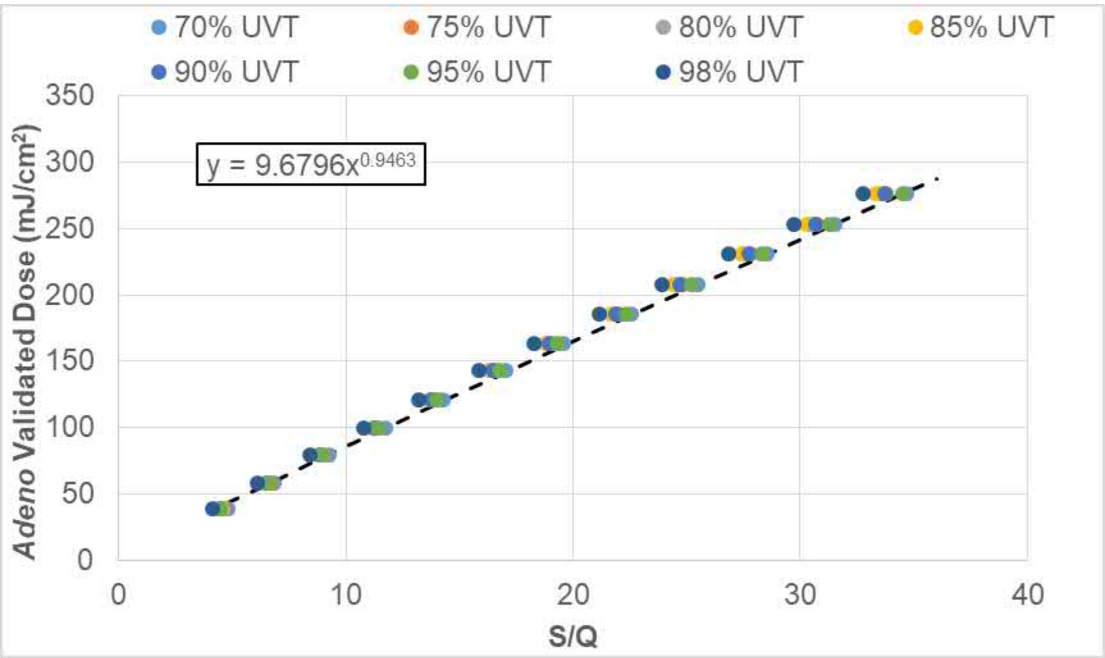

Figure 6.6c Adenovirus Validated Dose as a function of S/Q for the WF-115-4. *Dashed line shows minimum validated dose as a function of S/Q.*

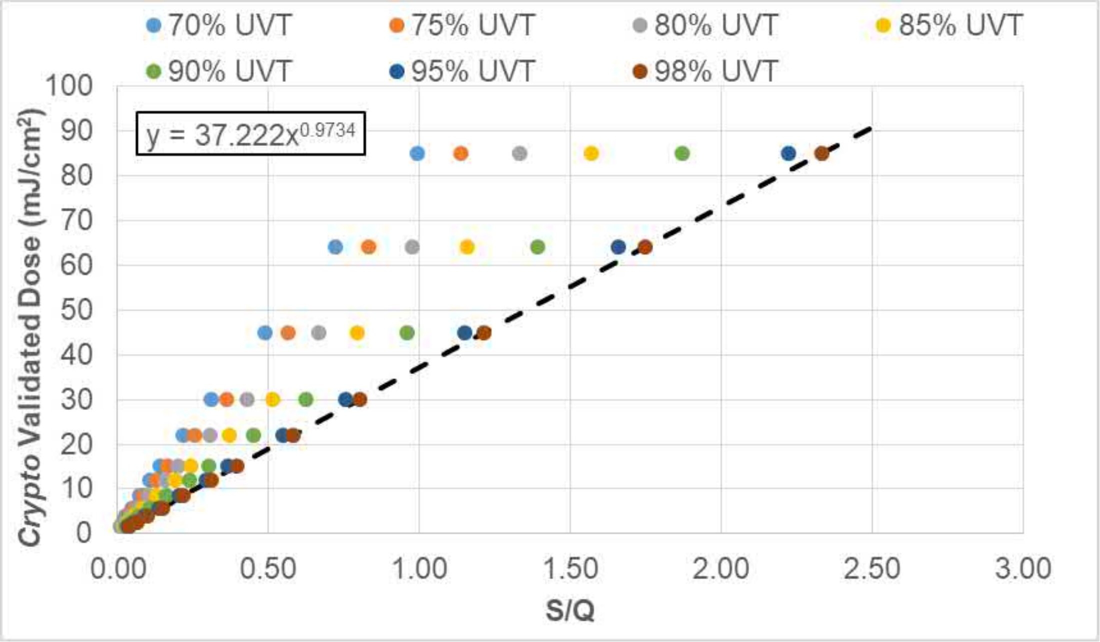

Figure 6.7a *Cryptosporidium* Validated Dose as a function of S/Q for the WF-125-6. *Dashed line shows minimum validated dose as a function of S/Q.*

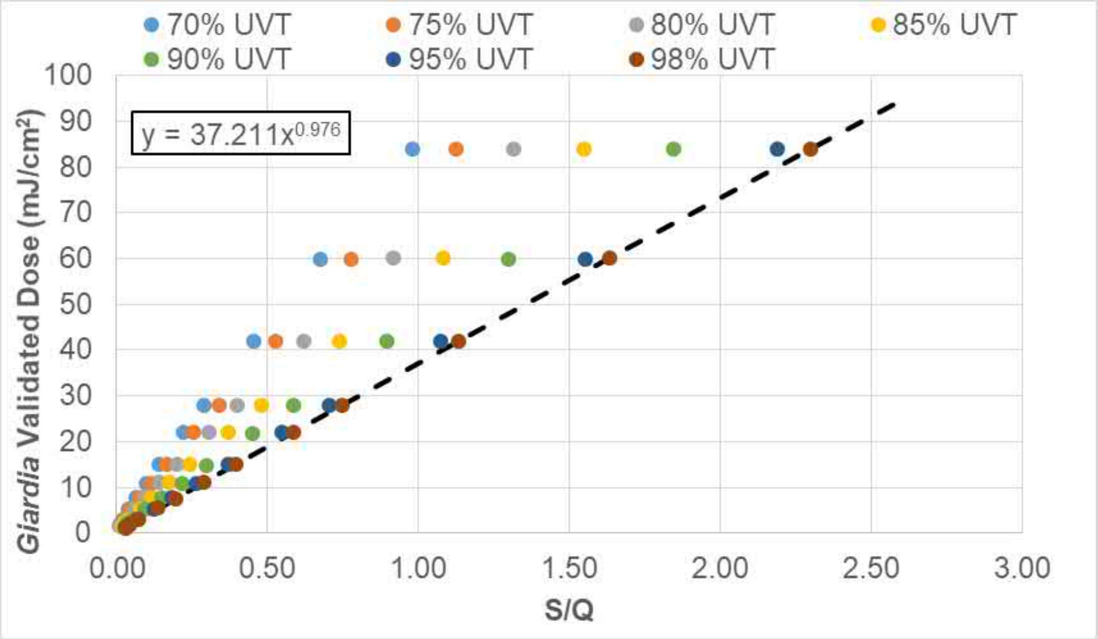

Figure 6.7b **Giardia Validated Dose as a function of S/Q for the WF-125-6. *Dashed line shows minimum validated dose as a function of S/Q.***

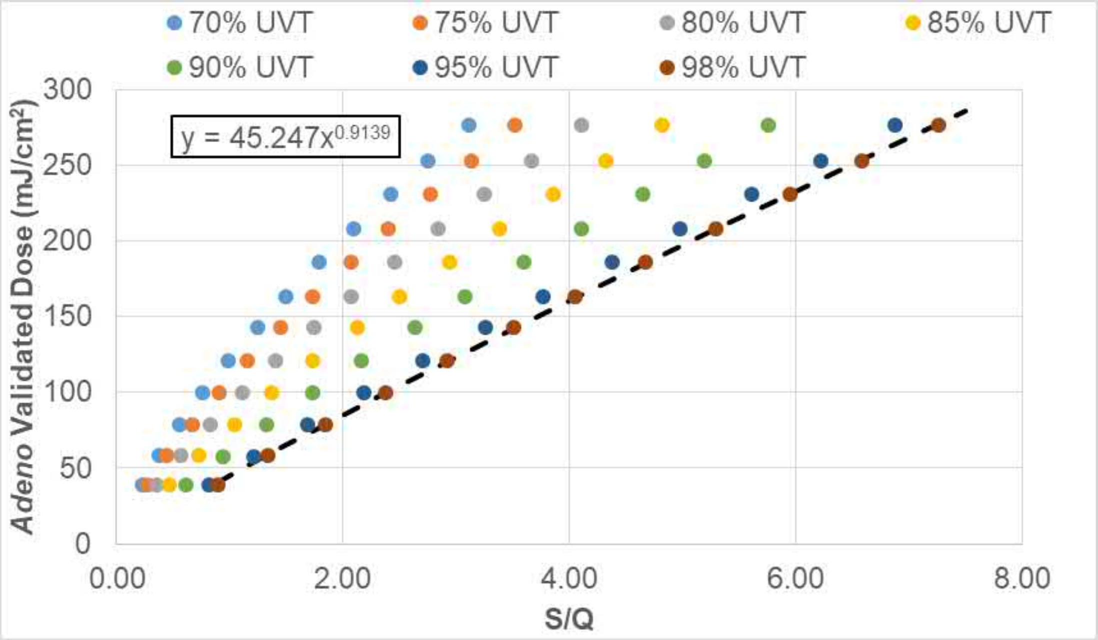

Figure 6.7c **Adenovirus Validated Dose as a function of S/Q for the WF-125-6. *Dashed line shows minimum validated dose as a function of S/Q.***

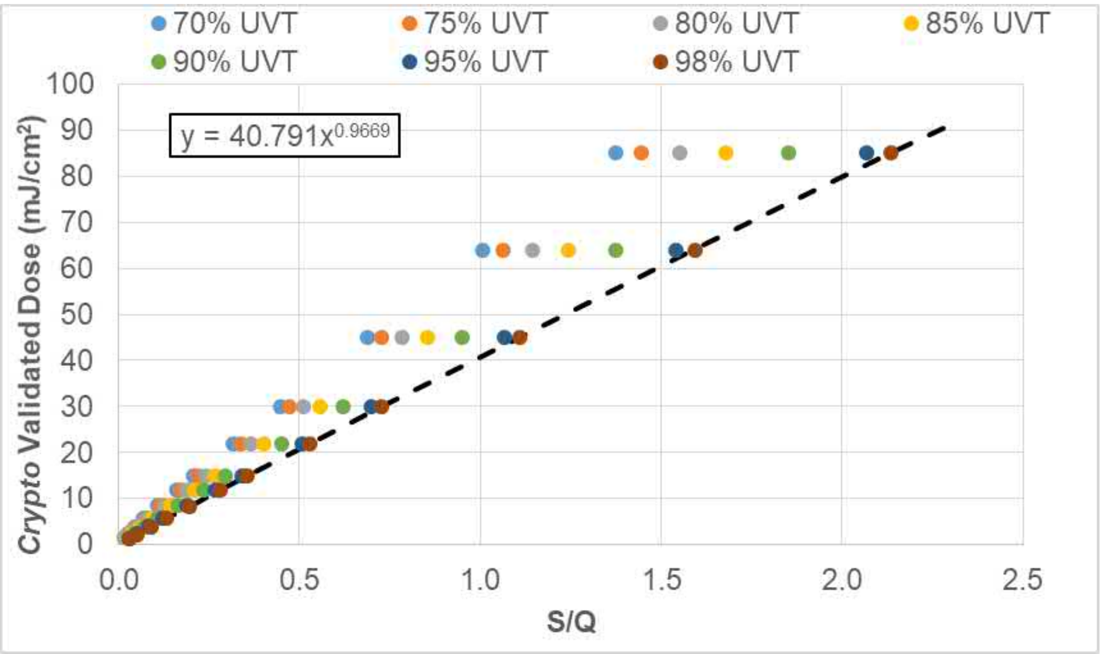

Figure 6.8a ***Cryptosporidium*** **Validated Dose as a function of S/Q for the WF-225-8.** ***Dashed line shows minimum validated dose as a function of S/Q.***

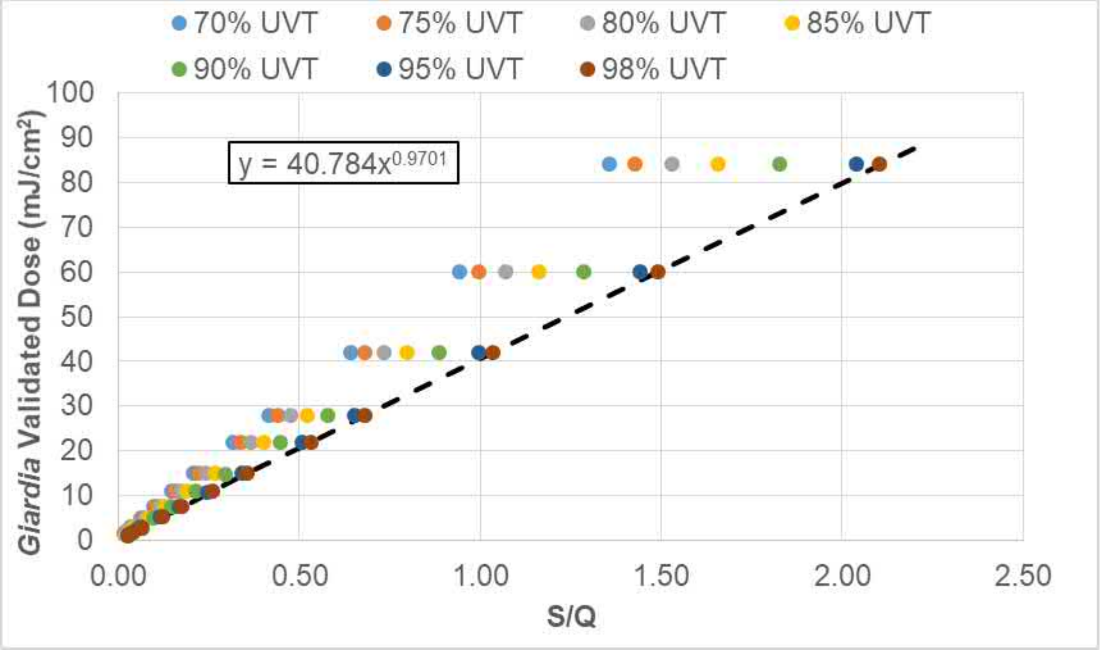

Figure 6.8b **Giardia Validated Dose as a function of S/Q for the WF-225-8.** ***Dashed line shows minimum validated dose as a function of S/Q.***

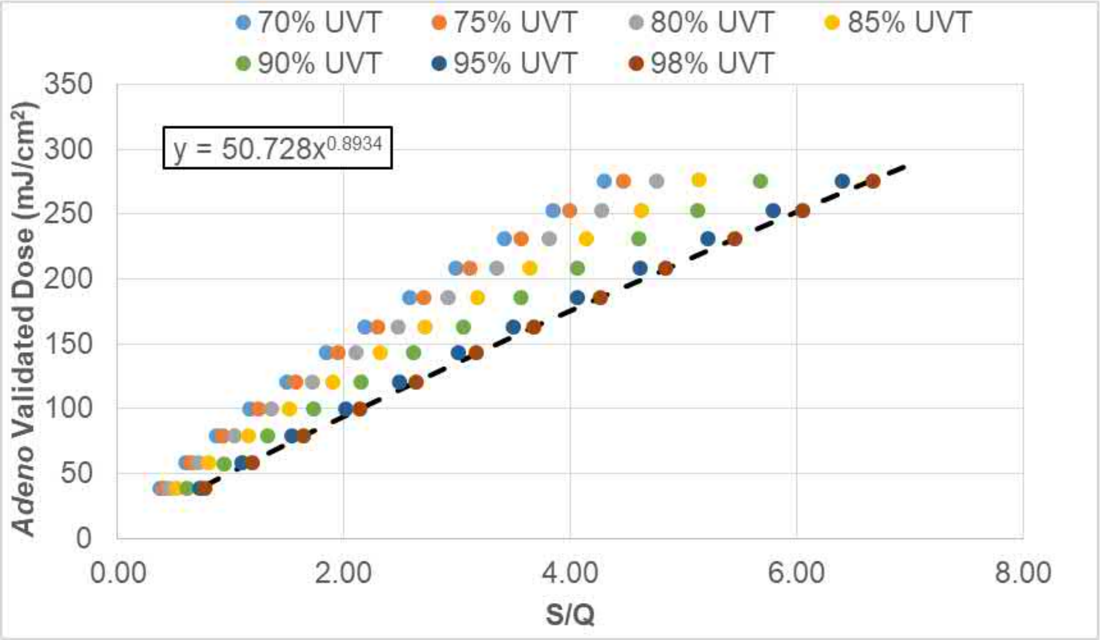

Figure 6.8c **Adenovirus Validated Dose as a function of S/Q for the WF-225-8.** ***Dashed line shows minimum validated dose as a function of S/Q.***

6.3.1 MS2 Equations that do not Use a UVT Monitor

Equation 5.19 was also used to predict MS2 REDs as a function of S/Q and UVTs ranging from 70 to 98 percent in 5 percent increments. The calculations used MS2 D_L as defined by Equation 5.20. The UV sensor values, S, were determined using Equation 5.2. The validated doses were defined using Equation 6.1. The UVT that gave the minimum validated dose was defined at each value of S/Q. The minimum validated dose was fitted as a function of S/Q using a power fit function.

Figures 6.9, 6.10, and 6.11 show the validated doses for MS2 as a function of S/Q at UVTs of 70 to 98 percent for the WF-115-4, WF-125-6, and WF-225-8, respectively.

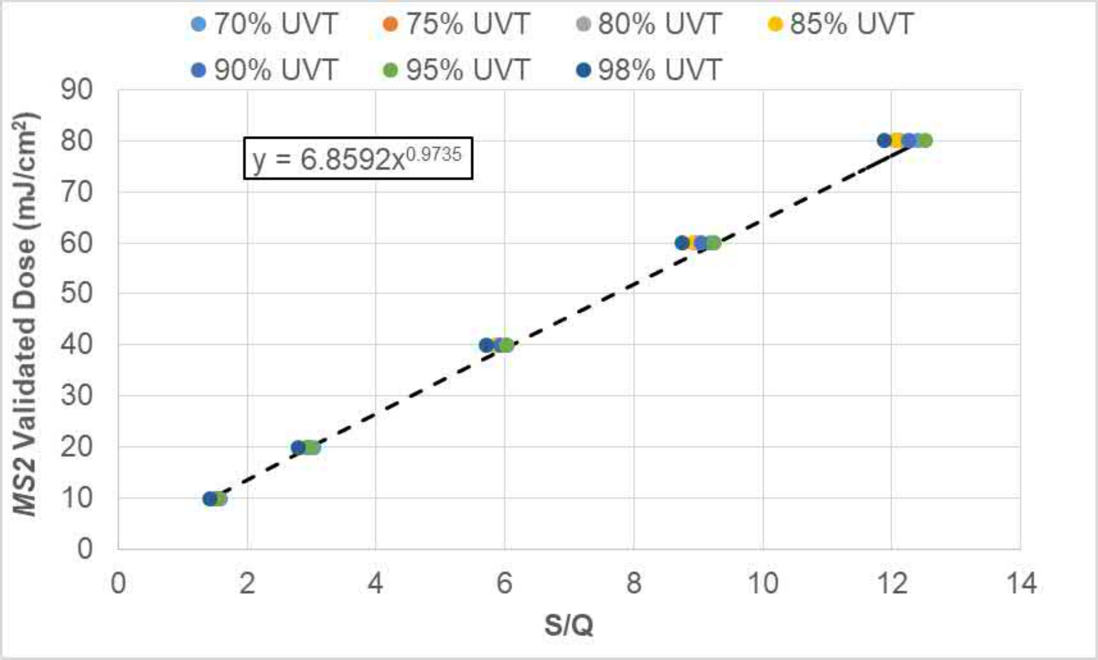

Figure 6.9 MS2 Dose as a function of S/Q for the WF-115-4*. Dashed line shows minimum validated dose as a function of S/Q.*

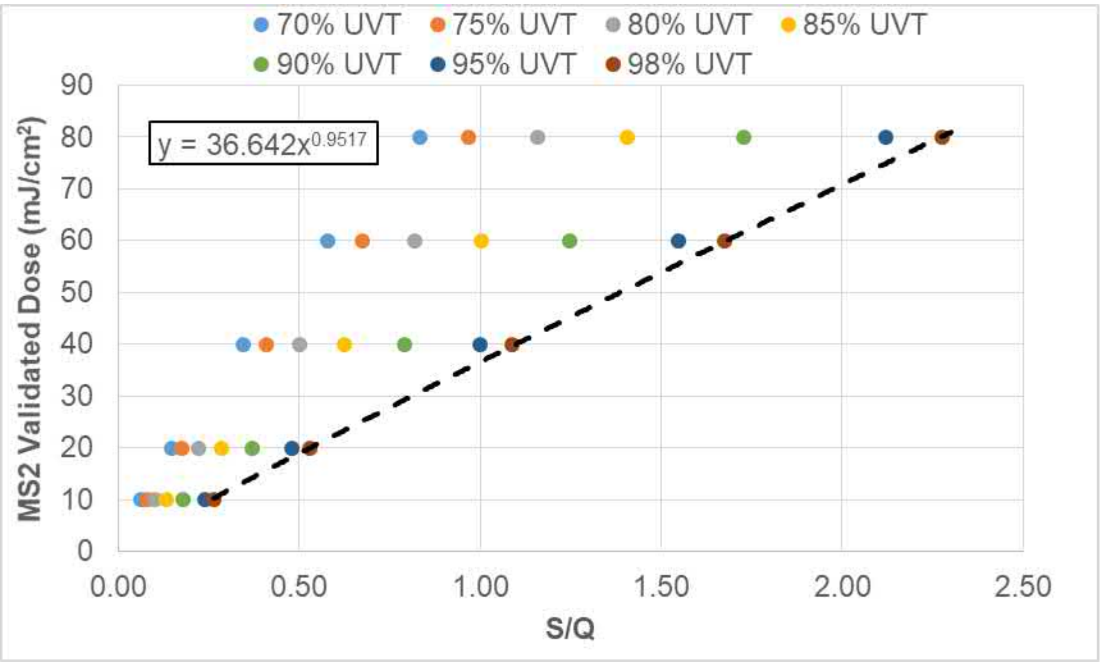

Figure 6.10 MS2 Dose as a function of S/Q for the WF-125-6*. Dashed line shows minimum validated dose as a function of S/Q.*

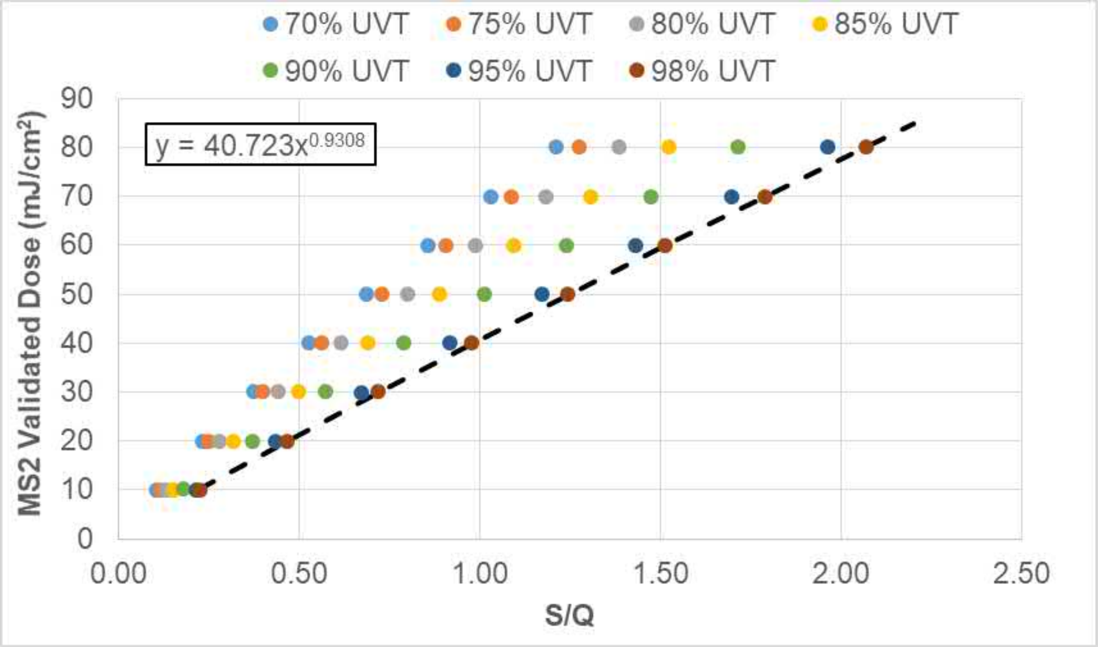

Figure 6.11 MS2 Dose as a function of S/Q for the WF-225-8*. Dashed line shows minimum validated dose as a function of S/Q.*

6.3.2 Validated UV Dose for *Cryptosporidium*, Giardia, and Adenovirus Credit

Tables 6.12a, 6.13a, and 6.14a report the target *Cryptosporidium*, Giardia and adenovirus REDs required for *Cryptosporidium*, Giardia, and adenovirus credit, respectively, for the WF-115-4 reactor. Tables 6.12b, 6.13b, and 6.14b report the validation factors associated with those target REDs. Tables 6.15a, 6.16a, and 6.17a report the target *Cryptosporidium*, Giardia and adenovirus REDs required for *Cryptosporidium*, Giardia, and adenovirus credit, respectively, for the WF-125-6 reactor. Tables 6.15b, 6.16b, and 6.17b report the validation factors associated with those target REDs. Tables 6.18a, 6.19a, and 6.20a report the target *Cryptosporidium*, Giardia and adenovirus REDs required for *Cryptosporidium*, Giardia, and adenovirus credit, respectively, for the WF-225-8 reactor. Tables 6.18b, 6.19b, and 6.20b report the validation factors associated with those target REDs.

Tables 6.12 through 6.20 are shown following Section 6.3.3.

The values in these tables were determined using the following approach:

1. Determine the UV sensitivity, DL, for the target pathogen as a function of the pathogen RED, using Equation 5.22.
2. Determine the pathogen log inactivation as the target RED divided by the DL.

3. Calculate UDR using Equations 6.10. Set the value of UDR to zero if the value is less than 15 percent.

4. Calculate UIN using Equation 6.8 and the coefficients in Table 6.2.

5. Calculate UVal using Equation 6.4 with US set to zero.

6. Set the RED bias to a value of 1.00.

7. Calculate the ASCF using Equation 6.13 and the coefficients in Table 6.9.

8. Calculate the validation factor using Equation 6.2.

9. Calculate the validated dose using Equation 6.1.

6.3.3 Example Calculations

Continuing with Example 1 from Section 5.5.1, Examples 3 provides an example calculation of log inactivation credit for specific operating conditions.

Example 3. Calculating Log Inactivation and RED Credit

Determine the *Cryptosporidium* log inactivation credit for the WF-115-4 UV reactor described in Example 1. The flow rate is 50 m^3/hr, the UVT is 90 percent and the relative lamp output (S/S_0) is 0.87. As shown in Example 1, Equation 5.6 predicts a *Cryptosporidium* log inactivation of 4.198 log, which corresponds to a *Cryptosporidium* RED of 24.81 mJ/cm^2.

This value does not include the validation factor. According to Table 6.12a, at 90 percent UVT, the target *Cryptosporidium* REDs for 3.5 and 4.0 log inactivation credit are 20.40 and 29.59 mJ/cm^2, respectively. Therefore, the reactor operation achieves 3.5 log inactivation credit.

Alternatively, the validation factor can be calculated specifically for the reported *Cryptosporidium* RED using the equation given in this chapter. Those calculations are summarized in Table 6.11.

Table 6.11 Calculation of *Cryptosporidium* Credit with Example 3

***Cryptosporidium* log *i* (Equation 5.6)**	4.198 log
D_L	5.909 mJ/cm^2 per log *i*
***Cryptosporidium* RED**	24.81 mJ/cm^2
B_{RED}	1.0
U_{in}	0.3624 log
U_{DR}	3.217%
U_{val}	1.087
ASCF	1.244
VF	1.352
Credited Dose	18.35 mJ/cm^2
***Crypto* inactivation credit**	3.5 logs

Example 4. Calculating Log Inactivation and RED Credit

Continuing with Example 2 from Section 5.6.1, Examples 4 provides an example calculation of log inactivation credit for specific operating conditions.

Determine the *Cryptosporidium* log inactivation credit for the WF-115-4 UV reactor described in Example 2. The flow rate is 50 m^3/hr, UVT = 90%, S/S_0 = 0.87. As shown in Example 2, Equation 5.16 predicts a *Cryptosporidium* log inactivation of 3.879 log, which corresponds to a *Cryptosporidium* RED of 19.93 mJ/cm^2.

This value does not include the validation factor. Using Equation 6.15 and the coefficients in Table 6.10, for the *Cryptosporidium* validated dose as a function of S/Q, and the flow and calculated UV sensor value used in the Example 2 calculation, the credited dose would be 18.11 mJ/cm^2.

Table 6.12a Minimum *Crypto* RED (mJ/cm^2) Required for *Crypto* Log Inactivation Credits for the WF 115-4

UVT	Log Inactivation Credit of:											
	0.5	1	1.5	2	2.5	3	3.5	4	4.5	5	5.5	6
66	2.32	3.29	4.82	6.91	9.87	13.65	16.89	24.49	33.14	49.35	69.76	92.21
67	2.30	3.25	4.77	6.83	9.76	13.50	16.69	24.20	32.74	48.76	68.92	91.10
68	2.29	3.23	4.74	6.79	9.69	13.40	16.57	24.02	32.50	48.39	68.40	90.41
69	2.28	3.22	4.72	6.76	9.65	13.35	16.50	23.93	32.37	48.21	68.14	90.07
70	2.28	3.22	4.72	6.76	9.65	13.34	16.49	23.92	32.35	48.17	68.10	90.01
71	2.29	3.23	4.73	6.77	9.66	13.37	16.52	23.96	32.41	48.26	68.22	90.17
72	2.29	3.24	4.74	6.79	9.70	13.41	16.58	24.05	32.53	48.44	68.48	90.51
73	2.30	3.25	4.77	6.83	9.75	13.48	16.67	24.18	32.70	48.70	68.84	90.99
74	2.31	3.27	4.79	6.87	9.81	13.56	16.77	24.33	32.91	49.01	69.27	91.57
75	2.32	3.29	4.82	6.91	9.88	13.66	16.89	24.50	33.14	49.36	69.77	92.23
76	2.33	3.31	4.86	6.96	9.95	13.76	17.02	24.69	33.40	49.74	70.31	92.95
77	2.35	3.33	4.89	7.02	10.03	13.86	17.16	24.89	33.68	50.15	70.89	93.71
78	2.36	3.36	4.93	7.08	10.11	13.98	17.31	25.10	33.97	50.58	71.50	94.52
79	2.37	3.38	4.97	7.14	10.20	14.10	17.46	25.32	34.27	51.04	72.14	95.38
80	2.39	3.41	5.02	7.20	10.29	14.22	17.62	25.56	34.59	51.51	72.82	96.27
81	2.41	3.44	5.06	7.27	10.39	14.36	17.79	25.81	34.93	52.02	73.53	97.23
82	2.42	3.47	5.11	7.34	10.49	14.50	17.98	26.07	35.30	52.57	74.31	98.25
83	2.44	3.50	5.16	7.42	10.60	14.66	18.18	26.36	35.69	53.16	75.14	99.36
84	2.46	3.54	5.22	7.50	10.73	14.83	18.40	26.68	36.13	53.81	76.06	100.6
85	2.48	3.58	5.28	7.60	10.87	15.02	18.64	27.04	36.61	54.53	77.08	101.9
86	2.51	3.62	5.35	7.70	11.02	15.24	18.91	27.43	37.16	55.34	78.22	103.5
87	2.54	3.68	5.43	7.82	11.20	15.48	19.22	27.88	37.77	56.25	79.51	105.2
88	2.58	3.73	5.52	7.96	11.39	15.76	19.57	28.38	38.45	57.27	80.96	107.1
89	2.63	3.80	5.63	8.11	11.61	16.07	19.96	28.95	39.23	58.44	82.60	109.3
90	2.67	3.87	5.74	8.28	11.87	16.43	20.40	29.59	40.11	59.75	84.46	111.7
91	2.73	3.96	5.87	8.48	12.15	16.83	20.90	30.32	41.11	61.24	86.56	114.5
92	2.79	4.05	6.02	8.70	12.46	17.28	21.47	31.15	42.23	62.91	88.92	117.7
93	2.86	4.16	6.19	8.94	12.81	17.79	22.10	32.07	43.49	64.79	91.58	121.2
94	2.94	4.28	6.38	9.22	13.21	18.36	22.81	33.11	44.91	66.88	94.56	125.1
95	3.02	4.41	6.59	9.53	13.65	18.99	23.59	34.27	46.47	69.22	97.88	129.6
96	3.12	4.56	6.82	9.87	14.13	19.70	24.46	35.55	48.21	71.81	101.6	134.4
97	3.22	4.73	7.07	10.25	14.67	20.48	25.43	36.97	50.13	74.67	105.6	139.9
98	3.34	4.91	7.35	10.66	15.27	21.33	26.49	38.52	52.25	77.82	110.1	145.8

Table 6.12b Validation Factors Required for *Crypto* Log Inactivation Credits for the WF-115-4

UVT	Log Inactivation Credit of:											
	0.5	**1**	**1.5**	**2**	**2.5**	**3**	**3.5**	**4**	**4.5**	**5**	**5.5**	**6**
66	1.449	1.314	1.237	1.192	1.161	1.138	1.126	1.113	1.105	1.097	1.090	1.085
67	1.437	1.301	1.223	1.178	1.148	1.125	1.113	1.100	1.091	1.083	1.077	1.072
68	1.430	1.293	1.215	1.170	1.140	1.117	1.104	1.092	1.083	1.075	1.069	1.064
69	1.426	1.289	1.211	1.166	1.136	1.113	1.100	1.088	1.079	1.071	1.065	1.060
70	1.425	1.288	1.210	1.165	1.135	1.112	1.099	1.087	1.078	1.071	1.064	1.059
71	1.427	1.290	1.212	1.167	1.137	1.114	1.101	1.089	1.080	1.072	1.066	1.061
72	1.431	1.294	1.216	1.171	1.141	1.118	1.106	1.093	1.084	1.077	1.070	1.065
73	1.436	1.300	1.222	1.177	1.147	1.123	1.111	1.099	1.090	1.082	1.076	1.070
74	1.442	1.307	1.229	1.184	1.154	1.130	1.118	1.106	1.097	1.089	1.082	1.077
75	1.449	1.315	1.237	1.192	1.162	1.138	1.126	1.114	1.105	1.097	1.090	1.085
76	1.457	1.323	1.245	1.201	1.170	1.146	1.135	1.122	1.113	1.105	1.099	1.093
77	1.465	1.333	1.255	1.210	1.180	1.155	1.144	1.131	1.123	1.114	1.108	1.103
78	1.474	1.342	1.265	1.220	1.189	1.165	1.154	1.141	1.132	1.124	1.117	1.112
79	1.483	1.353	1.275	1.230	1.199	1.175	1.164	1.151	1.142	1.134	1.127	1.122
80	1.492	1.363	1.286	1.241	1.210	1.185	1.175	1.162	1.153	1.145	1.138	1.133
81	1.502	1.375	1.297	1.252	1.222	1.196	1.186	1.173	1.164	1.156	1.149	1.144
82	1.513	1.387	1.310	1.265	1.234	1.208	1.198	1.185	1.177	1.168	1.161	1.156
83	1.525	1.400	1.323	1.278	1.247	1.221	1.212	1.198	1.190	1.181	1.174	1.169
84	1.538	1.415	1.338	1.293	1.262	1.236	1.226	1.213	1.204	1.196	1.188	1.183
85	1.552	1.431	1.354	1.309	1.278	1.252	1.243	1.229	1.220	1.212	1.204	1.199
86	1.569	1.449	1.372	1.328	1.297	1.270	1.261	1.247	1.238	1.230	1.222	1.217
87	1.590	1.470	1.393	1.348	1.317	1.290	1.281	1.267	1.259	1.250	1.242	1.237
88	1.613	1.493	1.416	1.372	1.340	1.313	1.304	1.290	1.282	1.273	1.265	1.260
89	1.640	1.519	1.443	1.398	1.366	1.339	1.330	1.316	1.308	1.299	1.291	1.285
90	1.670	1.548	1.472	1.428	1.396	1.369	1.360	1.345	1.337	1.328	1.320	1.314
91	1.704	1.582	1.506	1.462	1.429	1.402	1.393	1.378	1.370	1.361	1.352	1.347
92	1.743	1.620	1.544	1.499	1.466	1.440	1.431	1.416	1.408	1.398	1.389	1.384
93	1.786	1.663	1.587	1.542	1.507	1.483	1.473	1.458	1.450	1.440	1.431	1.426
94	1.834	1.711	1.635	1.589	1.554	1.530	1.520	1.505	1.497	1.486	1.477	1.472
95	1.887	1.765	1.688	1.643	1.605	1.583	1.573	1.557	1.549	1.538	1.529	1.524
96	1.947	1.824	1.748	1.701	1.663	1.641	1.631	1.616	1.607	1.596	1.587	1.582
97	2.012	1.890	1.813	1.766	1.726	1.706	1.695	1.680	1.671	1.659	1.651	1.645
98	2.084	1.962	1.885	1.838	1.796	1.778	1.766	1.751	1.742	1.729	1.721	1.715

Table 6.13a Minimum Giardia RED (mJ/cm^2) Required for Giardia Log Inactivation Credits for the WF-115-4

UVT	Log Inactivation Credit of:											
	0.5	1	1.5	2	2.5	3	3.5	4	4.5	5	5.5	6
66	2.10	2.73	3.73	6.20	8.95	12.54	16.89	24.47	30.93	46.06	65.41	91.15
67	2.08	2.71	3.69	6.13	8.84	12.40	16.69	24.19	30.56	45.51	64.63	90.04
68	2.07	2.69	3.67	6.09	8.78	12.31	16.57	24.01	30.33	45.16	64.14	89.36
69	2.07	2.68	3.65	6.06	8.75	12.26	16.50	23.92	30.21	44.99	63.90	89.02
70	2.07	2.68	3.65	6.06	8.74	12.25	16.49	23.90	30.19	44.96	63.85	88.96
71	2.07	2.68	3.66	6.07	8.76	12.28	16.52	23.95	30.25	45.04	63.97	89.13
72	2.08	2.69	3.67	6.09	8.79	12.32	16.58	24.03	30.36	45.21	64.21	89.46
73	2.08	2.70	3.69	6.12	8.83	12.38	16.67	24.16	30.52	45.45	64.55	89.94
74	2.09	2.72	3.71	6.16	8.89	12.46	16.77	24.31	30.72	45.74	64.96	90.51
75	2.10	2.73	3.73	6.20	8.95	12.55	16.89	24.48	30.94	46.07	65.43	91.16
76	2.11	2.75	3.76	6.25	9.01	12.64	17.02	24.67	31.18	46.43	65.93	91.88
77	2.12	2.77	3.79	6.30	9.09	12.74	17.16	24.86	31.43	46.81	66.48	92.64
78	2.14	2.79	3.82	6.35	9.16	12.85	17.31	25.07	31.70	47.21	67.05	93.44
79	2.15	2.81	3.85	6.40	9.24	12.96	17.46	25.29	31.98	47.63	67.65	94.28
80	2.17	2.83	3.89	6.46	9.32	13.08	17.62	25.53	32.28	48.08	68.29	95.17
81	2.19	2.85	3.92	6.52	9.41	13.20	17.79	25.77	32.60	48.55	68.96	96.12
82	2.21	2.88	3.96	6.58	9.51	13.34	17.98	26.04	32.94	49.06	69.69	97.13
83	2.22	2.91	4.00	6.65	9.61	13.48	18.18	26.33	33.31	49.62	70.48	98.23
84	2.25	2.94	4.05	6.73	9.72	13.64	18.40	26.64	33.72	50.22	71.34	99.44
85	2.27	2.97	4.10	6.81	9.85	13.82	18.64	26.99	34.17	50.90	72.30	100.8
86	2.30	3.00	4.15	6.91	9.99	14.02	18.91	27.39	34.68	51.65	73.37	102.3
87	2.33	3.05	4.22	7.02	10.15	14.24	19.22	27.83	35.25	52.50	74.58	104.0
88	2.36	3.10	4.29	7.14	10.33	14.50	19.57	28.33	35.89	53.46	75.94	105.9
89	2.40	3.16	4.37	7.28	10.53	14.78	19.96	28.90	36.62	54.54	77.49	108.0
90	2.44	3.22	4.46	7.43	10.76	15.11	20.40	29.55	37.44	55.77	79.23	110.5
91	2.49	3.30	4.57	7.61	11.01	15.47	20.90	30.28	38.37	57.16	81.21	113.3
92	2.55	3.38	4.69	7.80	11.30	15.89	21.47	31.10	39.42	58.72	83.43	116.4
93	2.61	3.47	4.82	8.03	11.63	16.35	22.10	32.03	40.60	60.47	85.93	119.9
94	2.67	3.58	4.97	8.27	11.99	16.88	22.80	33.07	41.91	62.43	88.73	123.8
95	2.75	3.69	5.13	8.55	12.40	17.46	23.58	34.22	43.38	64.62	91.85	128.2
96	2.84	3.82	5.31	8.86	12.85	18.10	24.44	35.50	45.00	67.05	95.32	133.0
97	2.93	3.96	5.51	9.19	13.34	18.82	25.40	36.92	46.79	69.73	99.14	138.4
98	3.03	4.12	5.72	9.57	13.89	19.60	26.45	38.48	48.76	72.67	103.4	144.3

Table 6.13b Validation Factors Required for Giardia Log Inactivation Credits for the WF-115-4

UVT	Log Inactivation Credit of:											
	0.5	**1**	**1.5**	**2**	**2.5**	**3**	**3.5**	**4**	**4.5**	**5**	**5.5**	**6**
66	1.398	1.301	1.244	1.192	1.162	1.140	1.126	1.112	1.105	1.097	1.090	1.085
67	1.388	1.288	1.230	1.179	1.148	1.127	1.113	1.099	1.091	1.083	1.077	1.072
68	1.381	1.281	1.221	1.170	1.140	1.119	1.104	1.091	1.083	1.075	1.069	1.064
69	1.378	1.277	1.217	1.166	1.136	1.115	1.100	1.087	1.079	1.071	1.065	1.060
70	1.378	1.276	1.216	1.165	1.135	1.114	1.099	1.086	1.078	1.071	1.064	1.059
71	1.379	1.278	1.219	1.167	1.137	1.116	1.101	1.088	1.080	1.072	1.066	1.061
72	1.382	1.282	1.223	1.172	1.141	1.120	1.106	1.092	1.084	1.077	1.070	1.065
73	1.387	1.287	1.229	1.177	1.147	1.126	1.111	1.098	1.090	1.082	1.076	1.071
74	1.393	1.294	1.236	1.184	1.154	1.133	1.118	1.105	1.097	1.089	1.083	1.077
75	1.398	1.301	1.244	1.192	1.162	1.140	1.126	1.113	1.105	1.097	1.090	1.085
76	1.407	1.310	1.253	1.201	1.171	1.149	1.135	1.121	1.113	1.105	1.099	1.094
77	1.416	1.319	1.263	1.210	1.180	1.158	1.144	1.130	1.123	1.114	1.108	1.103
78	1.425	1.328	1.273	1.220	1.190	1.168	1.154	1.140	1.132	1.124	1.117	1.112
79	1.435	1.338	1.284	1.231	1.200	1.178	1.164	1.150	1.142	1.134	1.128	1.122
80	1.446	1.348	1.295	1.241	1.211	1.189	1.175	1.160	1.153	1.145	1.138	1.133
81	1.457	1.359	1.307	1.253	1.222	1.200	1.186	1.172	1.164	1.156	1.149	1.144
82	1.469	1.371	1.319	1.265	1.234	1.212	1.198	1.184	1.177	1.168	1.161	1.156
83	1.482	1.383	1.333	1.279	1.248	1.226	1.212	1.197	1.190	1.181	1.175	1.169
84	1.497	1.397	1.349	1.294	1.263	1.240	1.226	1.211	1.204	1.196	1.189	1.184
85	1.513	1.413	1.366	1.310	1.279	1.256	1.243	1.227	1.220	1.212	1.205	1.200
86	1.530	1.430	1.384	1.328	1.297	1.274	1.261	1.245	1.238	1.230	1.223	1.218
87	1.550	1.452	1.406	1.349	1.318	1.295	1.281	1.265	1.259	1.250	1.243	1.238
88	1.573	1.476	1.430	1.372	1.341	1.318	1.304	1.288	1.282	1.273	1.266	1.261
89	1.598	1.503	1.457	1.399	1.367	1.344	1.330	1.314	1.308	1.299	1.291	1.286
90	1.627	1.534	1.488	1.429	1.397	1.373	1.360	1.343	1.337	1.328	1.321	1.315
91	1.660	1.569	1.522	1.463	1.430	1.407	1.393	1.376	1.370	1.361	1.353	1.348
92	1.696	1.608	1.562	1.501	1.468	1.444	1.431	1.414	1.408	1.398	1.390	1.385
93	1.737	1.653	1.606	1.543	1.510	1.487	1.473	1.456	1.450	1.440	1.432	1.427
94	1.782	1.702	1.655	1.591	1.557	1.534	1.520	1.503	1.497	1.487	1.479	1.474
95	1.833	1.757	1.710	1.644	1.610	1.587	1.572	1.555	1.549	1.539	1.531	1.526
96	1.889	1.818	1.770	1.703	1.668	1.646	1.630	1.614	1.607	1.596	1.589	1.583
97	1.951	1.886	1.836	1.768	1.733	1.710	1.693	1.678	1.671	1.660	1.652	1.647
98	2.021	1.960	1.908	1.840	1.804	1.782	1.763	1.749	1.742	1.730	1.723	1.717

Table 6.14a Minimum Adenovirus RED (mJ/cm^2) Required for Adenovirus Log Inactivation Credits for the WF-115-4

UVT	Log Inactivation Credit of:											
	0.5	1	1.5	2	2.5	3	3.5	4	4.5	5	5.5	6
66	55.00	73.74	94.73	115.8	136.9	158.9	179.0	202.2	224.4	247.5	269.6	292.8
67	54.46	72.85	93.51	114.2	135.0	156.7	176.5	199.3	221.1	243.9	265.7	288.5
68	54.07	72.23	92.66	113.1	133.7	155.1	174.7	197.3	218.8	241.4	262.9	285.5
69	53.82	71.83	92.11	112.4	132.8	154.1	173.6	196.0	217.4	239.8	261.1	283.5
70	53.69	71.61	91.80	112.0	132.4	153.6	172.9	195.3	216.6	238.9	260.2	282.5
71	53.64	71.54	91.70	111.9	132.2	153.4	172.7	195.0	216.3	238.6	259.9	282.1
72	53.67	71.58	91.76	112.0	132.3	153.5	172.8	195.2	216.5	238.8	260.0	282.3
73	53.75	71.71	91.95	112.2	132.6	153.9	173.2	195.6	217.0	239.3	260.6	283.0
74	53.88	71.92	92.23	112.6	133.0	154.4	173.8	196.3	217.7	240.1	261.6	284.0
75	54.04	72.18	92.59	113.0	133.6	155.0	174.6	197.1	218.7	241.2	262.7	285.2
76	54.23	72.49	93.01	113.6	134.2	155.8	175.4	198.1	219.8	242.4	264.1	286.7
77	54.44	72.82	93.47	114.2	134.9	156.6	176.4	199.2	221.0	243.8	265.6	288.3
78	54.66	73.19	93.97	114.8	135.7	157.5	177.5	200.4	222.3	245.3	267.2	290.1
79	54.91	73.59	94.51	115.5	136.6	158.5	178.6	201.7	223.8	246.9	268.9	292.0
80	55.17	74.01	95.10	116.2	137.5	159.5	179.8	203.1	225.3	248.6	270.8	294.1
81	55.45	74.47	95.73	117.0	138.4	160.7	181.1	204.6	227.0	250.4	272.9	296.3
82	55.75	74.97	96.42	117.9	139.5	161.9	182.6	206.2	228.8	252.5	275.1	298.7
83	56.09	75.53	97.18	118.9	140.7	163.3	184.2	208.0	230.9	254.7	277.5	301.4
84	56.47	76.15	98.03	119.9	142.0	164.9	185.9	210.0	233.1	257.2	280.3	304.4
85	56.89	76.84	98.99	121.2	143.5	166.6	187.9	212.3	235.7	260.1	283.4	307.8
86	57.38	77.64	100.1	122.6	145.1	168.7	190.2	214.9	238.6	263.3	286.9	311.7
87	57.93	78.54	101.3	124.2	147.1	170.9	192.8	217.9	241.9	267.0	291.0	316.1
88	58.64	79.59	102.8	126.0	149.3	173.6	195.8	221.3	245.7	271.2	295.6	321.1
89	59.48	80.82	104.4	128.1	151.8	176.6	199.2	225.2	250.1	276.1	300.9	326.9
90	60.43	82.22	106.4	130.5	154.7	180.1	203.2	229.7	255.1	281.7	307.0	333.6
91	61.52	83.83	108.5	133.3	158.0	184.0	207.7	234.9	260.8	288.0	314.0	341.2
92	62.76	85.65	111.0	136.5	161.8	188.5	212.8	240.7	267.4	295.3	322.0	349.9
93	64.16	87.72	113.8	140.0	166.1	193.7	218.6	247.4	274.8	303.6	331.0	359.7
94	65.74	90.06	117.0	144.1	171.0	199.4	225.2	254.9	283.3	312.9	341.3	370.9
95	67.51	92.69	120.6	148.6	176.5	205.9	232.7	263.4	292.7	323.4	352.8	383.5
96	69.49	95.62	124.6	153.7	182.7	213.3	241.0	272.9	303.4	335.2	365.7	397.5
97	71.69	98.89	129.1	159.3	189.7	221.4	250.3	283.5	315.2	348.4	380.1	413.2
98	74.12	102.5	134.1	165.6	197.3	230.5	260.6	295.2	328.3	363.0	396.1	430.6

Table 6.14b Validation Factors Required for Adenovirus Log Inactivation Credits for the WF-115-4

UVT	Log Inactivation Credit of:											
	0.5	1	1.5	2	2.5	3	3.5	4	4.5	5	5.5	6
66	1.410	1.271	1.199	1.158	1.131	1.111	1.098	1.087	1.079	1.071	1.066	1.061
67	1.396	1.256	1.184	1.142	1.116	1.096	1.083	1.072	1.063	1.056	1.050	1.045
68	1.386	1.245	1.173	1.131	1.105	1.085	1.072	1.061	1.052	1.045	1.039	1.034
69	1.380	1.238	1.166	1.124	1.098	1.078	1.065	1.054	1.045	1.038	1.032	1.027
70	1.377	1.235	1.162	1.120	1.094	1.074	1.061	1.050	1.041	1.034	1.028	1.023
71	1.375	1.233	1.161	1.119	1.093	1.073	1.060	1.049	1.040	1.033	1.027	1.022
72	1.376	1.234	1.162	1.120	1.093	1.074	1.060	1.049	1.041	1.034	1.028	1.023
73	1.378	1.236	1.164	1.122	1.096	1.076	1.063	1.052	1.043	1.036	1.030	1.025
74	1.382	1.240	1.167	1.126	1.099	1.080	1.066	1.055	1.047	1.040	1.034	1.029
75	1.386	1.245	1.172	1.130	1.104	1.084	1.071	1.060	1.051	1.044	1.038	1.033
76	1.390	1.250	1.177	1.136	1.109	1.089	1.076	1.065	1.057	1.049	1.044	1.039
77	1.396	1.256	1.183	1.142	1.115	1.095	1.082	1.071	1.063	1.055	1.050	1.045
78	1.402	1.262	1.190	1.148	1.122	1.102	1.089	1.077	1.069	1.062	1.056	1.051
79	1.408	1.269	1.196	1.155	1.129	1.108	1.096	1.084	1.076	1.069	1.063	1.058
80	1.414	1.276	1.204	1.162	1.136	1.116	1.103	1.092	1.083	1.076	1.070	1.065
81	1.422	1.284	1.212	1.170	1.144	1.124	1.111	1.100	1.091	1.084	1.078	1.074
82	1.430	1.293	1.220	1.179	1.153	1.132	1.120	1.109	1.100	1.093	1.087	1.082
83	1.438	1.302	1.230	1.189	1.163	1.142	1.130	1.118	1.110	1.103	1.097	1.092
84	1.448	1.313	1.241	1.199	1.173	1.153	1.141	1.129	1.121	1.114	1.108	1.103
85	1.459	1.325	1.253	1.212	1.186	1.165	1.153	1.142	1.133	1.126	1.120	1.115
86	1.471	1.339	1.267	1.226	1.200	1.179	1.167	1.156	1.147	1.140	1.134	1.129
87	1.485	1.354	1.283	1.242	1.215	1.195	1.183	1.172	1.163	1.156	1.150	1.145
88	1.504	1.372	1.301	1.260	1.234	1.214	1.201	1.190	1.181	1.174	1.168	1.163
89	1.525	1.393	1.322	1.281	1.254	1.235	1.222	1.211	1.202	1.195	1.189	1.185
90	1.550	1.418	1.346	1.305	1.278	1.259	1.246	1.235	1.226	1.219	1.214	1.209
91	1.577	1.445	1.374	1.333	1.306	1.287	1.274	1.263	1.254	1.247	1.241	1.236
92	1.609	1.477	1.405	1.365	1.337	1.318	1.305	1.294	1.286	1.278	1.273	1.268
93	1.645	1.512	1.441	1.400	1.373	1.354	1.341	1.330	1.321	1.314	1.308	1.303
94	1.686	1.553	1.481	1.441	1.413	1.395	1.382	1.370	1.362	1.355	1.349	1.344
95	1.731	1.598	1.526	1.486	1.459	1.440	1.427	1.416	1.407	1.400	1.394	1.389
96	1.782	1.649	1.577	1.537	1.510	1.491	1.478	1.467	1.458	1.451	1.445	1.440
97	1.838	1.705	1.634	1.593	1.567	1.548	1.535	1.524	1.515	1.508	1.502	1.497
98	1.900	1.768	1.698	1.656	1.631	1.612	1.599	1.587	1.579	1.571	1.565	1.560

Table 6.15a Minimum *Crypto* RED (mJ/cm^2) Required for *Crypto* Log Inactivation Credits for the WF-125-6

UVT	Log Inactivation Credit of:											
	0.5	**1**	**1.5**	**2**	**2.5**	**3**	**3.5**	**4**	**4.5**	**5**	**5.5**	**6**
66	2.22	3.15	4.66	6.72	9.64	13.38	16.57	24.09	32.63	48.67	68.87	91.12
67	2.20	3.12	4.61	6.64	9.53	13.22	16.38	23.80	32.24	48.08	68.04	90.02
68	2.19	3.10	4.58	6.59	9.46	13.13	16.25	23.62	32.00	47.72	67.53	89.34
69	2.18	3.09	4.56	6.57	9.42	13.08	16.19	23.53	31.88	47.53	67.27	89.00
70	2.18	3.09	4.56	6.57	9.42	13.07	16.18	23.52	31.85	47.50	67.23	88.94
71	2.18	3.09	4.57	6.58	9.43	13.09	16.21	23.56	31.91	47.59	67.35	89.10
72	2.19	3.10	4.58	6.60	9.47	13.14	16.27	23.65	32.03	47.77	67.61	89.44
73	2.20	3.12	4.61	6.63	9.51	13.21	16.36	23.77	32.20	48.02	67.96	89.91
74	2.21	3.14	4.63	6.68	9.57	13.29	16.46	23.92	32.41	48.33	68.40	90.49
75	2.22	3.16	4.66	6.72	9.64	13.38	16.58	24.09	32.64	48.67	68.89	91.14
76	2.23	3.18	4.70	6.77	9.71	13.48	16.70	24.28	32.89	49.05	69.42	91.85
77	2.24	3.20	4.73	6.82	9.79	13.59	16.84	24.48	33.16	49.46	70.00	92.61
78	2.26	3.22	4.77	6.88	9.87	13.70	16.98	24.68	33.45	49.88	70.60	93.42
79	2.27	3.25	4.81	6.94	9.96	13.82	17.14	24.90	33.75	50.33	71.23	94.26
80	2.29	3.28	4.85	7.00	10.05	13.94	17.29	25.14	34.07	50.81	71.90	95.15
81	2.30	3.30	4.90	7.07	10.14	14.08	17.46	25.38	34.40	51.31	72.62	96.09
82	2.32	3.33	4.94	7.14	10.25	14.22	17.65	25.65	34.77	51.85	73.38	97.11
83	2.34	3.37	5.00	7.21	10.36	14.37	17.84	25.94	35.16	52.44	74.21	98.21
84	2.36	3.40	5.05	7.30	10.48	14.54	18.06	26.25	35.59	53.08	75.12	99.42
85	2.38	3.44	5.12	7.39	10.62	14.73	18.30	26.60	36.07	53.79	76.13	100.8
86	2.41	3.49	5.19	7.50	10.77	14.94	18.57	26.99	36.60	54.59	77.26	102.3
87	2.44	3.54	5.26	7.61	10.94	15.19	18.87	27.43	37.21	55.49	78.54	104.0
88	2.47	3.59	5.35	7.75	11.14	15.46	19.21	27.93	37.89	56.51	79.97	105.9
89	2.50	3.66	5.45	7.90	11.35	15.77	19.60	28.49	38.66	57.66	81.60	108.0
90	2.55	3.73	5.57	8.07	11.60	16.12	20.04	29.13	39.53	58.96	83.44	110.5
91	2.61	3.81	5.70	8.26	11.88	16.51	20.53	29.85	40.51	60.43	85.52	113.2
92	2.67	3.90	5.84	8.48	12.20	16.96	21.09	30.67	41.62	62.09	87.87	116.3
93	2.73	4.01	6.01	8.72	12.55	17.46	21.72	31.58	42.87	63.95	90.50	119.8
94	2.81	4.13	6.19	8.99	12.94	18.02	22.42	32.61	44.27	66.02	93.45	123.8
95	2.89	4.26	6.40	9.30	13.37	18.65	23.20	33.75	45.82	68.34	96.74	128.1
96	2.99	4.41	6.62	9.63	13.85	19.35	24.06	35.01	47.54	70.90	100.4	133.0
97	3.09	4.57	6.88	10.00	14.39	20.11	25.01	36.42	49.44	73.74	104.4	138.3
98	3.20	4.74	7.15	10.41	14.97	20.96	26.06	37.96	51.53	76.86	108.9	144.2

Table 6.15b Validation Factors Required for *Crypto* Log Inactivation Credits for the WF-125-6

UVT	Log Inactivation Credit of:											
	0.5	1	1.5	2	2.5	3	3.5	4	4.5	5	5.5	6
66	1.385	1.261	1.196	1.158	1.134	1.115	1.105	1.095	1.088	1.081	1.076	1.072
67	1.373	1.248	1.182	1.145	1.120	1.102	1.092	1.082	1.075	1.068	1.063	1.059
68	1.366	1.240	1.174	1.137	1.112	1.094	1.084	1.074	1.067	1.060	1.055	1.051
69	1.362	1.236	1.170	1.133	1.108	1.090	1.079	1.070	1.063	1.056	1.051	1.047
70	1.361	1.235	1.169	1.132	1.108	1.089	1.079	1.069	1.062	1.056	1.050	1.046
71	1.363	1.237	1.171	1.134	1.109	1.091	1.081	1.071	1.064	1.058	1.052	1.048
72	1.367	1.241	1.175	1.138	1.114	1.095	1.085	1.075	1.068	1.062	1.056	1.052
73	1.372	1.247	1.181	1.144	1.119	1.101	1.090	1.080	1.073	1.067	1.062	1.058
74	1.378	1.254	1.188	1.151	1.126	1.107	1.097	1.087	1.080	1.074	1.069	1.065
75	1.385	1.262	1.196	1.159	1.134	1.115	1.105	1.095	1.088	1.082	1.076	1.072
76	1.393	1.270	1.204	1.167	1.142	1.123	1.114	1.103	1.096	1.090	1.085	1.081
77	1.401	1.279	1.213	1.176	1.151	1.132	1.123	1.112	1.105	1.099	1.094	1.090
78	1.410	1.289	1.223	1.186	1.161	1.142	1.132	1.122	1.115	1.109	1.103	1.099
79	1.419	1.299	1.233	1.196	1.171	1.152	1.142	1.132	1.125	1.118	1.113	1.109
80	1.428	1.310	1.244	1.207	1.182	1.162	1.153	1.143	1.136	1.129	1.123	1.119
81	1.438	1.321	1.255	1.218	1.193	1.173	1.164	1.154	1.147	1.140	1.135	1.131
82	1.449	1.333	1.267	1.230	1.205	1.185	1.176	1.166	1.159	1.152	1.147	1.142
83	1.461	1.346	1.281	1.244	1.218	1.198	1.189	1.179	1.172	1.165	1.160	1.155
84	1.474	1.361	1.295	1.258	1.233	1.212	1.204	1.193	1.186	1.180	1.174	1.170
85	1.488	1.376	1.311	1.274	1.249	1.228	1.220	1.209	1.202	1.195	1.190	1.185
86	1.504	1.394	1.329	1.292	1.267	1.245	1.238	1.227	1.220	1.213	1.207	1.203
87	1.522	1.414	1.350	1.313	1.287	1.265	1.258	1.247	1.240	1.233	1.227	1.223
88	1.542	1.437	1.372	1.336	1.310	1.288	1.281	1.270	1.263	1.256	1.250	1.245
89	1.565	1.463	1.398	1.362	1.336	1.314	1.307	1.295	1.289	1.281	1.275	1.271
90	1.595	1.492	1.428	1.391	1.365	1.343	1.336	1.324	1.318	1.310	1.304	1.300
91	1.628	1.525	1.461	1.424	1.398	1.376	1.369	1.357	1.350	1.343	1.336	1.332
92	1.666	1.562	1.498	1.462	1.435	1.413	1.406	1.394	1.387	1.380	1.373	1.369
93	1.708	1.604	1.540	1.503	1.476	1.455	1.448	1.435	1.429	1.421	1.414	1.410
94	1.755	1.651	1.587	1.550	1.522	1.502	1.494	1.482	1.476	1.467	1.460	1.456
95	1.808	1.704	1.640	1.603	1.573	1.554	1.546	1.534	1.527	1.519	1.512	1.507
96	1.866	1.762	1.698	1.661	1.630	1.612	1.604	1.592	1.585	1.576	1.569	1.564
97	1.930	1.826	1.763	1.725	1.693	1.676	1.667	1.655	1.648	1.639	1.632	1.628
98	2.000	1.897	1.834	1.795	1.762	1.746	1.737	1.725	1.718	1.708	1.701	1.697

Table 6.16a Minimum Giardia RED (mJ/cm^2) Required for Giardia Log Inactivation Credits for the WF-125-6

UVT	Log Inactivation Credit of:											
	0.5	1	1.5	2	2.5	3	3.5	4	4.5	5	5.5	6
66	2.02	2.63	3.60	6.03	8.73	12.28	16.57	24.07	30.46	45.42	64.58	90.07
67	2.01	2.60	3.56	5.96	8.63	12.14	16.38	23.79	30.09	44.87	63.80	88.98
68	2.00	2.59	3.54	5.91	8.57	12.05	16.25	23.61	29.86	44.53	63.32	88.30
69	1.99	2.58	3.52	5.89	8.54	12.00	16.19	23.52	29.75	44.37	63.08	87.96
70	1.99	2.58	3.52	5.89	8.53	12.00	16.18	23.51	29.73	44.34	63.03	87.90
71	1.99	2.58	3.53	5.90	8.55	12.02	16.21	23.55	29.79	44.42	63.15	88.06
72	2.00	2.59	3.54	5.92	8.58	12.06	16.27	23.64	29.90	44.58	63.39	88.40
73	2.00	2.60	3.56	5.95	8.62	12.12	16.36	23.76	30.05	44.82	63.72	88.87
74	2.01	2.62	3.58	5.99	8.67	12.20	16.46	23.91	30.25	45.10	64.13	89.44
75	2.02	2.63	3.60	6.03	8.73	12.28	16.58	24.08	30.46	45.43	64.59	90.08
76	2.03	2.65	3.63	6.07	8.80	12.38	16.70	24.26	30.70	45.78	65.10	90.79
77	2.04	2.67	3.66	6.12	8.87	12.48	16.84	24.46	30.95	46.16	65.63	91.54
78	2.05	2.69	3.69	6.17	8.94	12.58	16.98	24.67	31.22	46.56	66.20	92.34
79	2.07	2.71	3.72	6.22	9.02	12.69	17.14	24.89	31.50	46.98	66.80	93.17
80	2.08	2.73	3.75	6.28	9.10	12.81	17.29	25.12	31.80	47.42	67.43	94.05
81	2.09	2.75	3.79	6.34	9.19	12.93	17.46	25.36	32.11	47.89	68.10	94.99
82	2.11	2.78	3.82	6.40	9.28	13.07	17.65	25.62	32.45	48.39	68.81	95.99
83	2.13	2.80	3.87	6.47	9.39	13.21	17.84	25.91	32.82	48.94	69.59	97.09
84	2.15	2.83	3.91	6.55	9.50	13.37	18.06	26.22	33.22	49.54	70.45	98.28
85	2.17	2.86	3.96	6.63	9.62	13.54	18.30	26.57	33.66	50.21	71.40	99.61
86	2.20	2.90	4.02	6.72	9.76	13.74	18.57	26.96	34.16	50.95	72.46	101.1
87	2.23	2.94	4.08	6.83	9.92	13.96	18.87	27.40	34.73	51.79	73.66	102.8
88	2.26	2.98	4.15	6.95	10.09	14.21	19.21	27.89	35.36	52.74	75.01	104.7
89	2.30	3.04	4.23	7.08	10.29	14.49	19.60	28.45	36.08	53.82	76.54	106.8
90	2.34	3.10	4.32	7.24	10.52	14.81	20.04	29.09	36.89	55.03	78.27	109.2
91	2.39	3.18	4.42	7.41	10.77	15.18	20.53	29.82	37.81	56.40	80.22	112.0
92	2.44	3.26	4.54	7.61	11.06	15.58	21.09	30.63	38.85	57.95	82.42	115.0
93	2.50	3.35	4.66	7.82	11.38	16.04	21.72	31.55	40.01	59.69	84.90	118.5
94	2.57	3.45	4.81	8.07	11.74	16.56	22.42	32.57	41.32	61.63	87.67	122.4
95	2.65	3.56	4.97	8.34	12.14	17.13	23.19	33.71	42.77	63.79	90.76	126.7
96	2.73	3.69	5.15	8.64	12.58	17.77	24.04	34.98	44.37	66.20	94.20	131.5
97	2.82	3.83	5.34	8.98	13.07	18.47	24.99	36.38	46.15	68.85	97.99	136.8
98	2.92	3.98	5.56	9.34	13.61	19.25	26.03	37.92	48.10	71.77	102.2	142.7

Table 6.16b Validation Factors Required for Giardia Log Inactivation Credits for the WF-125-6

UVT	Log Inactivation Credit of:											
	0.5	**1**	**1.5**	**2**	**2.5**	**3**	**3.5**	**4**	**4.5**	**5**	**5.5**	**6**
66	1.347	1.252	1.201	1.159	1.134	1.117	1.105	1.094	1.088	1.081	1.076	1.072
67	1.336	1.240	1.187	1.145	1.121	1.103	1.092	1.081	1.075	1.068	1.063	1.059
68	1.330	1.232	1.179	1.137	1.112	1.095	1.084	1.073	1.067	1.060	1.055	1.051
69	1.326	1.228	1.174	1.133	1.108	1.091	1.079	1.069	1.063	1.056	1.051	1.047
70	1.326	1.227	1.174	1.132	1.108	1.091	1.079	1.068	1.062	1.056	1.051	1.046
71	1.327	1.229	1.176	1.134	1.110	1.092	1.081	1.070	1.064	1.058	1.052	1.048
72	1.331	1.233	1.180	1.138	1.114	1.096	1.085	1.074	1.068	1.062	1.056	1.052
73	1.335	1.238	1.186	1.144	1.119	1.102	1.090	1.080	1.073	1.067	1.062	1.058
74	1.341	1.245	1.193	1.151	1.126	1.109	1.097	1.087	1.080	1.074	1.069	1.065
75	1.347	1.252	1.201	1.159	1.134	1.117	1.105	1.094	1.088	1.082	1.077	1.072
76	1.354	1.261	1.210	1.167	1.143	1.125	1.114	1.103	1.096	1.090	1.085	1.081
77	1.361	1.269	1.219	1.177	1.152	1.134	1.123	1.112	1.105	1.099	1.094	1.090
78	1.369	1.279	1.229	1.186	1.161	1.144	1.132	1.121	1.115	1.109	1.103	1.099
79	1.377	1.288	1.239	1.196	1.171	1.154	1.142	1.131	1.125	1.119	1.113	1.109
80	1.385	1.298	1.250	1.207	1.182	1.164	1.153	1.142	1.136	1.129	1.124	1.120
81	1.394	1.309	1.262	1.219	1.193	1.176	1.164	1.153	1.147	1.140	1.135	1.131
82	1.405	1.321	1.274	1.231	1.206	1.188	1.176	1.165	1.159	1.152	1.147	1.143
83	1.417	1.334	1.288	1.244	1.219	1.201	1.189	1.178	1.172	1.165	1.160	1.156
84	1.432	1.347	1.303	1.259	1.233	1.215	1.204	1.192	1.186	1.180	1.174	1.170
85	1.447	1.363	1.320	1.275	1.249	1.231	1.220	1.208	1.202	1.195	1.190	1.186
86	1.465	1.380	1.338	1.293	1.267	1.249	1.238	1.225	1.220	1.213	1.208	1.204
87	1.485	1.399	1.359	1.313	1.288	1.269	1.258	1.245	1.240	1.233	1.228	1.223
88	1.507	1.421	1.382	1.336	1.310	1.292	1.281	1.268	1.263	1.256	1.250	1.246
89	1.532	1.447	1.409	1.362	1.336	1.317	1.307	1.293	1.289	1.281	1.276	1.271
90	1.560	1.477	1.439	1.392	1.366	1.347	1.336	1.322	1.318	1.310	1.304	1.300
91	1.592	1.512	1.473	1.425	1.399	1.379	1.369	1.355	1.350	1.343	1.337	1.333
92	1.628	1.550	1.512	1.462	1.436	1.417	1.406	1.392	1.387	1.380	1.374	1.370
93	1.669	1.593	1.555	1.504	1.478	1.458	1.448	1.434	1.429	1.421	1.415	1.411
94	1.714	1.642	1.603	1.551	1.524	1.505	1.494	1.480	1.476	1.467	1.461	1.457
95	1.764	1.696	1.657	1.604	1.576	1.557	1.546	1.532	1.527	1.519	1.513	1.509
96	1.820	1.756	1.716	1.662	1.634	1.615	1.603	1.590	1.585	1.576	1.570	1.566
97	1.882	1.822	1.781	1.726	1.698	1.679	1.666	1.654	1.648	1.639	1.633	1.629
98	1.949	1.894	1.852	1.797	1.768	1.750	1.735	1.724	1.718	1.709	1.703	1.698

Table 6.17a Minimum Adenovirus RED (mJ/cm^2) Required for Adenovirus Log Inactivation Credits for the WF-125-6

UVT	Log Inactivation Credit of:										
	0.5	1	1.5	2	2.5	3	3.5	4	4.5	5	5.5	6
66	52.70	71.06	91.91	112.9	133.9	155.9	176.0	199.1	221.2	244.3	266.4	289.5
67	52.15	70.18	90.69	111.3	132.0	153.7	173.4	196.2	218.0	240.7	262.5	285.3
68	51.76	69.56	89.84	110.2	130.7	152.1	171.6	194.2	215.7	238.2	259.7	282.2
69	51.51	69.16	89.29	109.5	129.9	151.1	170.5	192.9	214.2	236.6	258.0	280.3
70	51.37	68.94	88.99	109.1	129.4	150.6	169.9	192.2	213.4	235.7	257.0	279.3
71	51.33	68.86	88.89	109.0	129.2	150.4	169.7	191.9	213.2	235.4	256.7	278.9
72	51.35	68.91	88.95	109.1	129.3	150.5	169.8	192.1	213.3	235.6	256.9	279.1
73	51.44	69.04	89.14	109.3	129.6	150.9	170.2	192.5	213.8	236.1	257.5	279.8
74	51.57	69.25	89.42	109.7	130.0	151.4	170.8	193.2	214.6	237.0	258.4	280.8
75	51.73	69.51	89.77	110.1	130.6	152.0	171.5	194.0	215.5	238.0	259.5	282.0
76	51.92	69.81	90.19	110.7	131.2	152.8	172.4	195.0	216.6	239.3	260.9	283.5
77	52.13	70.15	90.65	111.3	132.0	153.6	173.3	196.1	217.9	240.6	262.4	285.1
78	52.36	70.51	91.15	111.9	132.7	154.5	174.4	197.3	219.2	242.1	264.0	286.9
79	52.60	70.91	91.69	112.6	133.6	155.5	175.5	198.6	220.6	243.7	265.7	288.8
80	52.86	71.33	92.28	113.3	134.5	156.6	176.7	200.0	222.2	245.4	267.6	290.8
81	53.15	71.79	92.90	114.1	135.4	157.7	178.0	201.5	223.9	247.3	269.6	293.1
82	53.46	72.29	93.59	115.0	136.5	158.9	179.5	203.1	225.7	249.3	271.9	295.5
83	53.80	72.84	94.35	116.0	137.7	160.3	181.1	204.9	227.7	251.5	274.3	298.2
84	54.18	73.46	95.20	117.0	139.0	161.9	182.8	206.9	230.0	254.0	277.1	301.2
85	54.61	74.16	96.16	118.3	140.5	163.6	184.8	209.2	232.5	256.9	280.2	304.6
86	55.10	74.95	97.25	119.6	142.2	165.6	187.1	211.8	235.4	260.1	283.7	308.4
87	55.65	75.85	98.49	121.2	144.1	167.9	189.7	214.8	238.7	263.8	287.8	312.8
88	56.29	76.89	99.92	123.1	146.3	170.5	192.7	218.2	242.5	268.0	292.4	317.9
89	57.02	78.08	101.6	125.2	148.8	173.5	196.1	222.1	246.9	272.9	297.7	323.7
90	57.85	79.45	103.5	127.6	151.7	177.0	200.1	226.6	251.9	278.4	303.8	330.3
91	58.91	81.04	105.6	130.3	155.0	180.9	204.5	231.7	257.7	284.8	310.8	337.9
92	60.14	82.86	108.1	133.5	158.8	185.4	209.7	237.6	264.2	292.1	318.7	346.6
93	61.53	84.92	110.9	137.0	163.1	190.6	215.5	244.2	271.6	300.3	327.8	356.5
94	63.10	87.25	114.1	141.1	168.0	196.3	222.1	251.7	280.0	309.7	338.0	367.6
95	64.86	89.87	117.7	145.6	173.5	202.8	229.5	260.2	289.5	320.2	349.5	380.2
96	66.83	92.80	121.7	150.7	179.7	210.1	237.8	269.7	300.1	332.0	362.4	394.2
97	69.02	96.06	126.2	156.3	186.6	218.3	247.1	280.2	311.9	345.1	376.8	409.9
98	71.44	99.68	131.1	162.6	194.2	227.3	257.4	292.0	325.1	359.7	392.7	427.3

Table 6.17b Validation Factors Required for Adenovirus Log Inactivation Credits for the WF-125-6

UVT	Log Inactivation Credit of:											
	0.5	1	1.5	2	2.5	3	3.5	4	4.5	5	5.5	6
66	1.351	1.225	1.163	1.129	1.107	1.090	1.080	1.070	1.063	1.058	1.053	1.049
67	1.337	1.210	1.148	1.113	1.091	1.075	1.064	1.055	1.048	1.042	1.037	1.034
68	1.327	1.199	1.137	1.102	1.080	1.064	1.053	1.044	1.037	1.031	1.027	1.023
69	1.321	1.192	1.130	1.095	1.073	1.057	1.046	1.037	1.030	1.024	1.020	1.016
70	1.317	1.189	1.126	1.091	1.069	1.053	1.042	1.033	1.026	1.020	1.016	1.012
71	1.316	1.187	1.125	1.090	1.068	1.052	1.041	1.032	1.025	1.019	1.014	1.011
72	1.317	1.188	1.126	1.091	1.069	1.053	1.042	1.033	1.026	1.020	1.015	1.011
73	1.319	1.190	1.128	1.093	1.071	1.055	1.044	1.035	1.028	1.022	1.018	1.014
74	1.322	1.194	1.132	1.097	1.075	1.059	1.048	1.039	1.032	1.026	1.021	1.017
75	1.326	1.198	1.136	1.101	1.079	1.063	1.052	1.043	1.036	1.030	1.026	1.022
76	1.331	1.204	1.142	1.107	1.085	1.068	1.057	1.048	1.042	1.036	1.031	1.027
77	1.337	1.209	1.147	1.113	1.091	1.074	1.063	1.054	1.047	1.042	1.037	1.033
78	1.342	1.216	1.154	1.119	1.097	1.081	1.070	1.061	1.054	1.048	1.043	1.039
79	1.349	1.223	1.161	1.126	1.104	1.087	1.077	1.068	1.061	1.055	1.050	1.046
80	1.355	1.230	1.168	1.133	1.111	1.095	1.084	1.075	1.068	1.062	1.058	1.054
81	1.363	1.238	1.176	1.141	1.119	1.103	1.092	1.083	1.076	1.070	1.066	1.062
82	1.371	1.246	1.185	1.150	1.128	1.111	1.101	1.092	1.085	1.079	1.075	1.071
83	1.379	1.256	1.194	1.160	1.138	1.121	1.111	1.102	1.095	1.089	1.084	1.080
84	1.389	1.267	1.205	1.170	1.149	1.132	1.122	1.112	1.106	1.100	1.095	1.091
85	1.400	1.279	1.217	1.183	1.161	1.144	1.134	1.125	1.118	1.112	1.107	1.103
86	1.413	1.292	1.231	1.196	1.175	1.158	1.148	1.139	1.132	1.126	1.121	1.117
87	1.427	1.308	1.247	1.212	1.191	1.174	1.164	1.155	1.148	1.142	1.137	1.133
88	1.443	1.326	1.265	1.231	1.209	1.192	1.182	1.173	1.166	1.160	1.156	1.152
89	1.462	1.346	1.286	1.252	1.230	1.214	1.203	1.194	1.187	1.181	1.177	1.173
90	1.483	1.370	1.310	1.276	1.254	1.238	1.227	1.218	1.211	1.205	1.201	1.197
91	1.510	1.397	1.337	1.303	1.281	1.265	1.255	1.246	1.239	1.233	1.228	1.224
92	1.542	1.429	1.368	1.335	1.312	1.297	1.286	1.277	1.270	1.264	1.260	1.256
93	1.578	1.464	1.404	1.370	1.348	1.333	1.322	1.313	1.306	1.300	1.296	1.291
94	1.618	1.504	1.444	1.411	1.388	1.373	1.363	1.353	1.346	1.341	1.336	1.332
95	1.663	1.549	1.489	1.456	1.434	1.418	1.408	1.399	1.392	1.386	1.381	1.377
96	1.714	1.600	1.540	1.507	1.485	1.469	1.459	1.450	1.443	1.437	1.432	1.428
97	1.770	1.656	1.597	1.563	1.542	1.526	1.516	1.507	1.500	1.494	1.489	1.485
98	1.832	1.719	1.660	1.626	1.605	1.590	1.579	1.570	1.563	1.557	1.552	1.548

Table 6.18a Minimum *Crypto* RED (mJ/cm²) Required for *Crypto* Log Inactivation Credits for the WF-225-8

UVT	Log Inactivation Credit of:											
	0.5	1	1.5	2	2.5	3	3.5	4	4.5	5	5.5	6
66	2.15	3.07	4.56	6.60	9.49	13.21	16.38	23.83	32.32	48.24	68.33	90.45
67	2.13	3.04	4.51	6.52	9.38	13.05	16.18	23.55	31.93	47.66	67.50	89.36
68	2.12	3.02	4.48	6.47	9.31	12.96	16.06	23.37	31.69	47.30	66.99	88.68
69	2.11	3.01	4.46	6.45	9.27	12.91	16.00	23.28	31.57	47.12	66.73	88.34
70	2.11	3.00	4.46	6.45	9.27	12.90	15.99	23.27	31.55	47.09	66.69	88.28
71	2.11	3.01	4.47	6.46	9.28	12.92	16.02	23.31	31.60	47.17	66.81	88.44
72	2.12	3.02	4.48	6.48	9.32	12.97	16.08	23.40	31.72	47.35	67.06	88.78
73	2.13	3.03	4.51	6.51	9.37	13.04	16.16	23.52	31.89	47.60	67.42	89.25
74	2.14	3.05	4.53	6.55	9.42	13.12	16.26	23.67	32.09	47.90	67.85	89.82
75	2.15	3.07	4.56	6.60	9.49	13.21	16.38	23.84	32.33	48.25	68.34	90.47
76	2.16	3.09	4.60	6.65	9.56	13.31	16.51	24.02	32.58	48.63	68.87	91.18
77	2.17	3.11	4.63	6.70	9.64	13.41	16.64	24.22	32.85	49.03	69.44	91.93
78	2.19	3.14	4.67	6.76	9.72	13.53	16.78	24.43	33.13	49.45	70.04	92.73
79	2.20	3.16	4.71	6.81	9.80	13.64	16.93	24.65	33.43	49.90	70.67	93.57
80	2.22	3.19	4.75	6.88	9.89	13.77	17.09	24.88	33.74	50.37	71.34	94.45
81	2.23	3.22	4.79	6.94	9.99	13.90	17.26	25.12	34.08	50.87	72.05	95.39
82	2.25	3.25	4.84	7.01	10.09	14.04	17.44	25.38	34.44	51.40	72.81	96.40
83	2.27	3.28	4.89	7.09	10.20	14.20	17.64	25.67	34.83	51.99	73.63	97.50
84	2.29	3.31	4.95	7.17	10.32	14.37	17.85	25.98	35.25	52.63	74.54	98.70
85	2.31	3.35	5.01	7.26	10.46	14.55	18.09	26.33	35.73	53.34	75.54	100.0
86	2.34	3.40	5.08	7.37	10.61	14.76	18.36	26.72	36.26	54.13	76.67	101.5
87	2.37	3.45	5.16	7.48	10.78	15.00	18.66	27.16	36.86	55.02	77.93	103.2
88	2.40	3.50	5.24	7.62	10.97	15.27	19.00	27.65	37.53	56.03	79.36	105.1
89	2.44	3.57	5.34	7.76	11.19	15.58	19.38	28.21	38.30	57.17	80.98	107.3
90	2.48	3.64	5.46	7.93	11.44	15.93	19.81	28.84	39.16	58.47	82.81	109.7
91	2.53	3.72	5.59	8.12	11.72	16.32	20.30	29.56	40.14	59.93	84.88	112.4
92	2.59	3.81	5.73	8.34	12.03	16.76	20.86	30.37	41.24	61.57	87.21	115.5
93	2.65	3.91	5.89	8.58	12.38	17.26	21.48	31.27	42.48	63.43	89.83	119.0
94	2.73	4.03	6.07	8.85	12.77	17.82	22.18	32.29	43.87	65.49	92.76	122.9
95	2.81	4.16	6.28	9.15	13.20	18.44	22.95	33.42	45.41	67.79	96.04	127.3
96	2.90	4.31	6.50	9.48	13.68	19.13	23.80	34.68	47.12	70.34	99.67	132.1
97	3.00	4.47	6.75	9.85	14.21	19.89	24.75	36.07	49.01	73.17	103.7	137.4
98	3.12	4.64	7.03	10.26	14.79	20.73	25.79	37.60	51.09	76.27	108.1	143.3

Table 6.18b Validation Factors Required for *Crypto* Log Inactivation Credits for the WF-225-8

UVT	Log Inactivation Credit of:											
	0.5	**1**	**1.5**	**2**	**2.5**	**3**	**3.5**	**4**	**4.5**	**5**	**5.5**	**6**
66	1.341	1.227	1.169	1.137	1.116	1.100	1.092	1.083	1.077	1.072	1.068	1.064
67	1.329	1.214	1.156	1.124	1.103	1.088	1.079	1.070	1.064	1.059	1.055	1.051
68	1.322	1.206	1.148	1.116	1.095	1.080	1.071	1.062	1.056	1.051	1.047	1.043
69	1.318	1.202	1.144	1.112	1.091	1.076	1.067	1.058	1.052	1.047	1.043	1.039
70	1.317	1.201	1.143	1.111	1.090	1.075	1.066	1.058	1.052	1.046	1.042	1.039
71	1.319	1.203	1.145	1.113	1.092	1.077	1.068	1.059	1.053	1.048	1.044	1.040
72	1.323	1.207	1.149	1.117	1.096	1.081	1.072	1.063	1.057	1.052	1.048	1.044
73	1.328	1.213	1.155	1.123	1.102	1.086	1.077	1.069	1.063	1.058	1.053	1.050
74	1.334	1.220	1.162	1.130	1.109	1.093	1.084	1.076	1.070	1.065	1.060	1.057
75	1.341	1.227	1.170	1.137	1.116	1.101	1.092	1.083	1.077	1.072	1.068	1.064
76	1.349	1.236	1.178	1.146	1.125	1.109	1.100	1.092	1.086	1.081	1.076	1.073
77	1.357	1.245	1.187	1.155	1.134	1.118	1.109	1.101	1.095	1.089	1.085	1.082
78	1.366	1.254	1.197	1.165	1.143	1.127	1.119	1.110	1.104	1.099	1.094	1.091
79	1.375	1.264	1.207	1.175	1.153	1.137	1.129	1.120	1.114	1.109	1.104	1.101
80	1.384	1.275	1.217	1.185	1.164	1.147	1.139	1.131	1.125	1.119	1.115	1.111
81	1.394	1.286	1.228	1.196	1.175	1.158	1.151	1.142	1.136	1.130	1.126	1.122
82	1.405	1.298	1.241	1.209	1.187	1.170	1.163	1.154	1.148	1.142	1.138	1.134
83	1.417	1.311	1.254	1.222	1.200	1.183	1.176	1.167	1.161	1.155	1.150	1.147
84	1.430	1.325	1.268	1.236	1.215	1.197	1.190	1.181	1.175	1.169	1.165	1.161
85	1.444	1.341	1.284	1.252	1.230	1.213	1.206	1.197	1.191	1.185	1.180	1.177
86	1.460	1.359	1.302	1.270	1.248	1.230	1.224	1.214	1.209	1.203	1.198	1.194
87	1.478	1.379	1.322	1.290	1.268	1.250	1.244	1.234	1.229	1.223	1.218	1.214
88	1.498	1.401	1.345	1.313	1.291	1.272	1.266	1.257	1.251	1.245	1.240	1.237
89	1.521	1.426	1.370	1.338	1.317	1.298	1.292	1.282	1.277	1.271	1.265	1.262
90	1.547	1.455	1.399	1.368	1.346	1.327	1.321	1.311	1.305	1.299	1.294	1.290
91	1.578	1.488	1.432	1.400	1.378	1.360	1.354	1.343	1.338	1.332	1.326	1.323
92	1.615	1.524	1.469	1.438	1.415	1.397	1.390	1.380	1.375	1.368	1.363	1.359
93	1.657	1.566	1.511	1.479	1.456	1.438	1.432	1.422	1.416	1.409	1.404	1.400
94	1.704	1.612	1.557	1.526	1.502	1.485	1.478	1.468	1.462	1.455	1.449	1.446
95	1.755	1.664	1.609	1.578	1.553	1.536	1.530	1.519	1.514	1.506	1.501	1.497
96	1.813	1.722	1.667	1.635	1.609	1.594	1.587	1.576	1.571	1.563	1.557	1.554
97	1.877	1.786	1.731	1.699	1.672	1.657	1.650	1.640	1.634	1.626	1.620	1.616
98	1.946	1.856	1.801	1.768	1.740	1.727	1.719	1.709	1.703	1.695	1.689	1.685

Table 6.19a Minimum Giardia RED (mJ/cm^2) Required for Giardia Log Inactivation Credits for the WF-225-8

UVT	Log Inactivation Credit of:											
	0.5	1	1.5	2	2.5	3	3.5	4	4.5	5	5.5	6
66	1.97	2.56	3.52	5.92	8.60	12.12	16.38	23.82	30.16	45.02	64.06	89.40
67	1.95	2.54	3.48	5.85	8.50	11.98	16.18	23.54	29.80	44.48	63.29	88.31
68	1.94	2.52	3.46	5.80	8.43	11.89	16.06	23.36	29.57	44.14	62.81	87.64
69	1.94	2.51	3.44	5.78	8.40	11.84	16.00	23.28	29.46	43.98	62.57	87.31
70	1.94	2.51	3.44	5.78	8.40	11.84	15.99	23.26	29.44	43.95	62.53	87.25
71	1.94	2.51	3.45	5.79	8.41	11.86	16.02	23.30	29.50	44.03	62.64	87.41
72	1.94	2.52	3.46	5.81	8.44	11.90	16.08	23.39	29.61	44.19	62.88	87.74
73	1.95	2.53	3.48	5.84	8.49	11.96	16.16	23.51	29.76	44.43	63.21	88.20
74	1.96	2.55	3.50	5.88	8.54	12.04	16.26	23.66	29.95	44.71	63.62	88.77
75	1.97	2.56	3.52	5.92	8.60	12.12	16.38	23.83	30.17	45.03	64.07	89.41
76	1.98	2.58	3.55	5.96	8.66	12.21	16.51	24.01	30.41	45.38	64.58	90.12
77	1.99	2.60	3.57	6.01	8.73	12.31	16.64	24.21	30.66	45.76	65.11	90.86
78	2.00	2.62	3.60	6.06	8.81	12.42	16.78	24.41	30.92	46.16	65.67	91.65
79	2.01	2.64	3.64	6.11	8.88	12.53	16.93	24.63	31.20	46.57	66.27	92.48
80	2.03	2.66	3.67	6.17	8.96	12.64	17.09	24.86	31.49	47.01	66.89	93.36
81	2.04	2.68	3.70	6.22	9.05	12.76	17.26	25.10	31.81	47.48	67.56	94.29
82	2.05	2.71	3.74	6.29	9.14	12.90	17.44	25.36	32.14	47.98	68.27	95.29
83	2.07	2.73	3.78	6.36	9.24	13.04	17.64	25.65	32.51	48.52	69.05	96.37
84	2.09	2.76	3.82	6.43	9.36	13.20	17.85	25.96	32.90	49.12	69.90	97.57
85	2.11	2.79	3.87	6.51	9.48	13.37	18.09	26.31	33.35	49.78	70.84	98.89
86	2.13	2.83	3.93	6.61	9.62	13.57	18.36	26.69	33.84	50.52	71.90	100.4
87	2.16	2.87	3.99	6.71	9.77	13.78	18.66	27.13	34.40	51.36	73.09	102.0
88	2.20	2.92	4.06	6.83	9.94	14.03	19.00	27.62	35.03	52.30	74.43	103.9
89	2.23	2.97	4.14	6.96	10.14	14.31	19.38	28.18	35.75	53.36	75.95	106.0
90	2.28	3.03	4.23	7.12	10.37	14.63	19.81	28.81	36.55	54.57	77.67	108.4
91	2.32	3.10	4.33	7.29	10.62	14.99	20.30	29.53	37.47	55.93	79.61	111.2
92	2.38	3.18	4.44	7.48	10.90	15.40	20.86	30.34	38.49	57.47	81.80	114.2
93	2.44	3.27	4.57	7.70	11.22	15.85	21.48	31.24	39.65	59.20	84.26	117.7
94	2.51	3.37	4.71	7.94	11.58	16.36	22.17	32.26	40.94	61.13	87.02	121.5
95	2.58	3.48	4.87	8.21	11.97	16.93	22.94	33.39	42.39	63.28	90.09	125.8
96	2.66	3.60	5.05	8.51	12.42	17.56	23.79	34.65	43.98	65.67	93.50	130.6
97	2.76	3.74	5.24	8.84	12.90	18.26	24.73	36.04	45.74	68.31	97.27	135.9
98	2.86	3.89	5.45	9.20	13.44	19.03	25.77	37.57	47.68	71.21	101.4	141.7

Table 6.19b Validation Factors Required for Giardia Log Inactivation Credits for the WF-225-8

UVT	Log Inactivation Credit of:											
	0.5	**1**	**1.5**	**2**	**2.5**	**3**	**3.5**	**4**	**4.5**	**5**	**5.5**	**6**
66	1.311	1.220	1.173	1.137	1.116	1.102	1.092	1.083	1.077	1.072	1.068	1.064
67	1.300	1.207	1.160	1.124	1.103	1.089	1.079	1.070	1.064	1.059	1.055	1.051
68	1.293	1.200	1.151	1.116	1.095	1.081	1.071	1.062	1.056	1.051	1.047	1.043
69	1.290	1.196	1.147	1.112	1.091	1.077	1.067	1.058	1.052	1.047	1.043	1.039
70	1.289	1.195	1.147	1.111	1.090	1.076	1.066	1.057	1.052	1.046	1.042	1.039
71	1.291	1.197	1.149	1.113	1.092	1.078	1.068	1.059	1.053	1.048	1.044	1.041
72	1.294	1.201	1.153	1.117	1.096	1.082	1.072	1.063	1.057	1.052	1.048	1.045
73	1.299	1.206	1.158	1.123	1.102	1.087	1.077	1.069	1.063	1.058	1.053	1.050
74	1.304	1.213	1.165	1.130	1.109	1.094	1.084	1.075	1.070	1.065	1.060	1.057
75	1.311	1.220	1.173	1.138	1.117	1.102	1.092	1.083	1.077	1.072	1.068	1.064
76	1.318	1.228	1.182	1.146	1.125	1.110	1.100	1.091	1.086	1.081	1.076	1.073
77	1.325	1.237	1.191	1.155	1.134	1.119	1.109	1.100	1.095	1.089	1.085	1.082
78	1.333	1.246	1.201	1.165	1.144	1.129	1.119	1.110	1.104	1.099	1.095	1.091
79	1.341	1.256	1.211	1.175	1.154	1.139	1.129	1.120	1.114	1.109	1.104	1.101
80	1.350	1.266	1.222	1.185	1.164	1.149	1.139	1.130	1.125	1.119	1.115	1.111
81	1.359	1.277	1.234	1.197	1.175	1.160	1.151	1.141	1.136	1.130	1.126	1.122
82	1.368	1.288	1.246	1.209	1.187	1.172	1.163	1.153	1.148	1.142	1.138	1.134
83	1.379	1.301	1.259	1.222	1.201	1.185	1.176	1.166	1.161	1.155	1.151	1.147
84	1.390	1.315	1.274	1.236	1.215	1.200	1.190	1.180	1.175	1.169	1.165	1.161
85	1.404	1.330	1.290	1.252	1.231	1.215	1.206	1.196	1.191	1.185	1.181	1.177
86	1.421	1.347	1.309	1.270	1.249	1.233	1.224	1.213	1.209	1.203	1.198	1.195
87	1.441	1.366	1.329	1.290	1.269	1.253	1.244	1.233	1.229	1.223	1.218	1.215
88	1.463	1.388	1.352	1.313	1.291	1.276	1.266	1.255	1.251	1.245	1.240	1.237
89	1.488	1.413	1.379	1.339	1.317	1.301	1.292	1.281	1.277	1.271	1.266	1.262
90	1.516	1.441	1.408	1.368	1.346	1.330	1.321	1.310	1.305	1.299	1.294	1.291
91	1.548	1.475	1.442	1.401	1.379	1.363	1.354	1.342	1.338	1.332	1.327	1.323
92	1.584	1.513	1.480	1.438	1.416	1.399	1.390	1.379	1.375	1.368	1.363	1.360
93	1.624	1.556	1.522	1.480	1.457	1.441	1.432	1.420	1.416	1.409	1.404	1.401
94	1.669	1.603	1.570	1.526	1.503	1.487	1.478	1.466	1.462	1.455	1.450	1.447
95	1.719	1.657	1.623	1.578	1.555	1.539	1.529	1.518	1.514	1.507	1.501	1.498
96	1.775	1.716	1.682	1.636	1.612	1.597	1.586	1.575	1.571	1.564	1.558	1.555
97	1.836	1.781	1.747	1.700	1.676	1.660	1.649	1.638	1.634	1.626	1.621	1.618
98	1.903	1.853	1.817	1.770	1.745	1.730	1.718	1.708	1.703	1.695	1.690	1.687

Table 6.20a Minimum Adenovirus RED (mJ/cm^2) Required for Adenovirus Log Inactivation Credits for the WF-225-8

UVT	Log Inactivation Credit of:											
	0.5	1	1.5	2	2.5	3	3.5	4	4.5	5	5.5	6
66	51.10	69.29	90.07	111.0	132.0	154.0	174.0	197.1	219.2	242.3	264.4	287.5
67	50.55	68.40	88.85	109.4	130.1	151.8	171.5	194.2	216.0	238.7	260.5	283.2
68	50.16	67.78	88.00	108.4	128.8	150.2	169.7	192.2	213.7	236.2	257.7	280.2
69	49.91	67.38	87.45	107.7	127.9	149.2	168.6	190.9	212.3	234.6	255.9	278.3
70	49.77	67.16	87.15	107.3	127.5	148.7	167.9	190.2	211.5	233.7	255.0	277.2
71	49.72	67.09	87.05	107.1	127.3	148.5	167.7	190.0	211.2	233.4	254.7	276.9
72	49.75	67.14	87.11	107.2	127.4	148.6	167.8	190.1	211.4	233.6	254.8	277.1
73	49.84	67.27	87.30	107.5	127.7	149.0	168.2	190.5	211.8	234.1	255.4	277.7
74	49.96	67.48	87.58	107.8	128.1	149.5	168.8	191.2	212.6	235.0	256.4	278.7
75	50.13	67.74	87.94	108.3	128.7	150.1	169.6	192.1	213.5	236.0	257.5	280.0
76	50.32	68.04	88.35	108.8	129.3	150.9	170.4	193.0	214.6	237.3	258.8	281.5
77	50.53	68.37	88.81	109.4	130.0	151.7	171.4	194.1	215.9	238.6	260.3	283.1
78	50.76	68.74	89.31	110.0	130.8	152.6	172.4	195.3	217.2	240.1	262.0	284.9
79	51.00	69.13	89.85	110.7	131.7	153.6	173.6	196.6	218.6	241.7	263.7	286.8
80	51.27	69.56	90.44	111.4	132.5	154.6	174.8	198.0	220.2	243.4	265.6	288.8
81	51.55	70.01	91.06	112.2	133.5	155.8	176.1	199.5	221.9	245.3	267.6	291.0
82	51.87	70.51	91.75	113.1	134.6	157.0	177.5	201.1	223.7	247.3	269.9	293.5
83	52.21	71.07	92.51	114.1	135.8	158.4	179.1	202.9	225.7	249.5	272.3	296.1
84	52.60	71.68	93.36	115.2	137.1	159.9	180.9	204.9	228.0	252.0	275.1	299.1
85	53.03	72.38	94.32	116.4	138.5	161.7	182.9	207.2	230.5	254.9	278.2	302.5
86	53.52	73.17	95.40	117.8	140.2	163.7	185.2	209.8	233.4	258.1	281.7	306.4
87	54.08	74.08	96.65	119.3	142.2	166.0	187.8	212.8	236.7	261.8	285.7	310.8
88	54.73	75.11	98.08	121.2	144.4	168.6	190.7	216.2	240.5	266.0	290.4	315.8
89	55.46	76.30	99.71	123.3	146.9	171.6	194.2	220.1	244.9	270.9	295.7	321.6
90	56.30	77.66	101.6	125.7	149.8	175.0	198.1	224.6	249.9	276.4	301.8	328.3
91	57.26	79.22	103.8	128.4	153.1	179.0	202.6	229.7	255.6	282.8	308.7	335.9
92	58.39	81.03	106.2	131.6	156.9	183.5	207.7	235.6	262.2	290.0	316.7	344.5
93	59.78	83.09	109.0	135.1	161.1	188.6	213.5	242.2	269.6	298.3	325.7	354.4
94	61.34	85.42	112.2	139.1	166.0	194.4	220.1	249.7	278.0	307.6	335.9	365.5
95	63.10	88.03	115.8	143.7	171.5	200.9	227.5	258.2	287.5	318.1	347.4	378.1
96	65.06	90.96	119.8	148.7	177.7	208.1	235.8	267.6	298.1	329.9	360.3	392.1
97	67.24	94.22	124.3	154.4	184.6	216.3	245.1	278.2	309.9	343.0	374.7	407.8
98	69.66	97.83	129.2	160.6	192.2	225.3	255.4	289.9	323.0	357.6	390.7	425.2

Table 6.20b Validation Factors Required for Adenovirus Log Inactivation Credits for the WF-225-8

UVT	Log Inactivation Credit of:											
	0.5	1	1.5	2	2.5	3	3.5	4	4.5	5	5.5	6
66	1.310	1.195	1.140	1.110	1.091	1.077	1.068	1.060	1.054	1.049	1.045	1.042
67	1.296	1.179	1.125	1.094	1.075	1.061	1.052	1.044	1.038	1.033	1.030	1.026
68	1.286	1.169	1.114	1.084	1.064	1.051	1.041	1.033	1.027	1.023	1.019	1.015
69	1.280	1.162	1.107	1.077	1.057	1.044	1.034	1.026	1.020	1.016	1.012	1.008
70	1.276	1.158	1.103	1.073	1.054	1.040	1.030	1.023	1.017	1.012	1.008	1.004
71	1.275	1.157	1.102	1.071	1.052	1.039	1.029	1.021	1.015	1.011	1.007	1.003
72	1.276	1.157	1.103	1.072	1.053	1.039	1.030	1.022	1.016	1.011	1.007	1.004
73	1.278	1.160	1.105	1.075	1.055	1.042	1.032	1.024	1.018	1.014	1.010	1.006
74	1.281	1.163	1.109	1.078	1.059	1.045	1.036	1.028	1.022	1.017	1.013	1.010
75	1.285	1.168	1.113	1.083	1.064	1.050	1.040	1.033	1.027	1.022	1.018	1.014
76	1.290	1.173	1.118	1.088	1.069	1.055	1.046	1.038	1.032	1.027	1.023	1.020
77	1.296	1.179	1.124	1.094	1.075	1.061	1.051	1.044	1.038	1.033	1.029	1.026
78	1.301	1.185	1.131	1.100	1.081	1.067	1.058	1.050	1.044	1.039	1.035	1.032
79	1.308	1.192	1.137	1.107	1.088	1.074	1.065	1.057	1.051	1.046	1.042	1.039
80	1.315	1.199	1.145	1.114	1.095	1.081	1.072	1.064	1.059	1.054	1.050	1.046
81	1.322	1.207	1.153	1.122	1.103	1.089	1.080	1.073	1.067	1.062	1.058	1.054
82	1.330	1.216	1.161	1.131	1.112	1.098	1.089	1.081	1.075	1.070	1.067	1.063
83	1.339	1.225	1.171	1.141	1.122	1.108	1.099	1.091	1.085	1.080	1.076	1.073
84	1.349	1.236	1.182	1.152	1.133	1.118	1.110	1.102	1.096	1.091	1.087	1.084
85	1.360	1.248	1.194	1.164	1.145	1.131	1.122	1.114	1.108	1.103	1.099	1.096
86	1.372	1.262	1.208	1.178	1.159	1.145	1.136	1.128	1.122	1.117	1.113	1.110
87	1.387	1.277	1.223	1.193	1.175	1.161	1.152	1.144	1.138	1.133	1.129	1.126
88	1.403	1.295	1.241	1.212	1.193	1.179	1.170	1.162	1.156	1.152	1.148	1.144
89	1.422	1.316	1.262	1.233	1.214	1.200	1.191	1.183	1.177	1.173	1.169	1.165
90	1.444	1.339	1.286	1.257	1.238	1.224	1.215	1.207	1.201	1.197	1.193	1.189
91	1.468	1.366	1.313	1.284	1.265	1.252	1.243	1.235	1.229	1.224	1.220	1.217
92	1.497	1.397	1.345	1.316	1.296	1.283	1.274	1.266	1.260	1.256	1.252	1.248
93	1.533	1.433	1.380	1.351	1.332	1.319	1.310	1.302	1.296	1.291	1.287	1.284
94	1.573	1.473	1.420	1.391	1.372	1.359	1.350	1.342	1.337	1.332	1.328	1.324
95	1.618	1.518	1.466	1.437	1.418	1.405	1.396	1.388	1.382	1.377	1.373	1.370
96	1.668	1.568	1.516	1.487	1.469	1.456	1.447	1.439	1.433	1.428	1.424	1.421
97	1.724	1.624	1.573	1.544	1.526	1.512	1.504	1.496	1.490	1.485	1.481	1.478
98	1.786	1.687	1.636	1.606	1.589	1.576	1.567	1.559	1.553	1.548	1.544	1.541

UVDGM COMPLIANCE

Validation testing, analysis, and reporting were conducted in accordance with the 2006 UVDGM. Tables 7.1 to 7.5 evaluate compliance of the validation to the five checklists provided in Chapter 5 of the UVDGM. The validation of the reactor meets the 2006 UVDGM with the following clarifications:

1. The Student's t-statistics tabulated in the UVDGM are incorrect because they use N degrees of freedom. The degree of freedom is defined as the number of samples minus the number of coefficients predicted in the model (*Applied Linear Regression*, 3rd Ed.). All t-statistics used in this validation were obtained using N-P degrees of freedom, where P is the number of parameters or coefficients in the model obtained from a regression analysis. For example, when dose response curves are fit using a quadratic equation, the model uses two parameters and thus N-2 degrees of freedom was used.
2. Validation equations predict log inactivation as a function of flow, UVT, UV sensor readings, and microbe UV sensitivity. Validation equations were fitted to validation data measured using MS2 and T1UV phage. Fits were obtained using a non-linear multi-variate regression that minimized the sum of squares of the differences between the measured and predicted log inactivation instead of measured and predicted REDs. Accordingly, the uncertainty of validation was defined in units of log inactivation instead of RED. The corresponding uncertainty in units of RED is obtained by multiplying the log inactivation uncertainty by the UV sensitivity (D_L) of the organism.
3. The UVDGM recommends calculating the log inactivation for the UV dose-response curve as $\log(N/N_0)$ where $\log(N_0)$ is defined as the y-axis intercept of the fit to log(N) versus UV dose. Analysis showed that the value of $\log(N_0)$ obtained using this approach was biased low for most of the measured UV dose-response curves. The bias would lead to over predictions of log inactivation by the biodosimetry analysis. Hence, $\log(N_0)$ was defined as the average of the measured value of log(N) with zero UV dose. These differences are tabulated in Appendix A Table A.4c.

Table 7.1 Compliance to UVDGM Checklist 5.1: UV Reactor Documentation

Dimensions and placement of all wetted components (e.g., lamps, sleeves, UV sensors, baffles, and cleaning mechanisms) within the reactor.	Tables 2.1, 2,2 and 2,3 describe the wetted dimensions of the reactors.
A technical description of lamp placement within the sleeve.	Section 2.1 describes the positioning of the lamp within the sleeves.
Specifications for the UV sensor port indicating all dimensions and tolerances that impact the positioning of the UV sensor relative to the lamps. If the UV sensor port contains a monitoring window separate from the UV sensor, specifications giving the window material, thickness and UV transmittance.	Figures 2.4, as well as Tables 2.1, 2.2, and 2.3, describe the location of UV sensor ports relative to lamps. Section 2.7 describes material of the UV sensor port window, and Appendix G shows the dimensions of the window.
Lamp Specifications: Technical description, manufacturer, and product number, electrical power rating, electrode-to-electrode length, spectral output, mercury content, and envelope diameter.	Section 2.2 and Appendix G provides all information except mercury content.
Lamp Sleeve Specifications: Technical description, sleeve dimensions, material, and UV transmittance (200 to 300 nm).	Section 2.3 and Appendix G provides all information.
Reference and Duty UV Sensor Specifications: Manufacturer and product number, technical description, external dimensions, total measurement uncertainty, working range, spectral and angular response, linearity, calibration factor, temperature stability, long-term stability.	Sections 2.5 and 2.6 and Appendix B provides all information.
Installation and Operation Documentation: Flowrate, headloss, and pressure rating of reactor, assembly and installation instructions, electrical requirements including line frequency, voltage, amperage, and power, O&M manuals and safety requirements.	Section 5.2 describes power consumption. Contact ATG for all other information.

Table 7.2 Compliance to UVDGM Checklist 5.2: Validation Test Plan

Purpose of Validation Testing. General description of why the tests are being done and how the data will be used.	Test plan was defined by Carollo and ATG prior to testing. Test plan defined target flow, UVT, lamp power, and expected REDs. Purpose of validation was to define UV dose algorithms applicable over the validated range in accordance with the 2006 UVDGM.
Roles and Responsibilities. Key personnel over seeing and performing the full-scale reactor testing and collimated beam testing, including their qualifications.	Section 3.5 describes personnel who conducted validation testing and collimated beam testing.
Location and Schedule. Location for conducting full scale reactor testing and collimated beam testing. Planned schedule for conducting the tests and performing the data analysis.	Validation was conducted at the Portland test facility. Test plan defined the schedule of testing. Portland test facility and methods and materials described in Sections 3 and 4.
Plan for state review.	Not applicable. Validation not conducted for a specific application.
Design of the Biodosimetry Test Stand: Inlet/outlet piping design including backflow prevention, mixing, sample ports, pumps, additives.	Biodosimetry test stand described in Section 3.
Collimated Beam Testing: Lamp type, collimated tube aperture, distance from light source to sample surface, radiometer make and model.	Collimated beam apparatus and protocol described in Appendix D.
Monitoring Equipment Specifications and Verifications of Equipment Accuracy: Flow meters, UVT analyzers, UV Spectrophotometers, power measurement, UV sensors, and radiometer make, model, and calibration.	Sections 3 and 4 describe equipment specifications and verification of accuracy. Section 5.3.2 provides reference UV sensor test results. Appendix B provides UV sensor calibration certificates. Appendix D provides radiometer calibration certificates. Appendix E provides UV spectrophotometer calibration certificates and accuracy test data. Appendix F provides flowmeter calibration data.
Experimental Test Conditions: Number of tests, UVT, flowrate, lamp power, and lamp status for each test condition; lamp fouling factor, use of new or aged lamps; and influent concentration of challenge microorganisms for each test condition, QA/QC Plan	Appendix A provides test plan including target flowrate, UVT, lamp power, and test microbe. Validation conducted using new lamps. Fouling factor depends on site specific design criteria. QA/QC plan in Section 4.

Table 7.3 Compliance to UVDGM Checklist 5.3: Validation Report

Detailed reactor documentation, including drawings and serial numbers and procedures used to verify reactor properties.	Section 2 describes documentation provided by ATG and measurements confirming wetted dimensions.
Validation test plan	Appendix A describes the validation test plan.
Full Scale Reactor Testing Results: Flowrate, measured UV Intensity, UVT, lamp power, lamp status, and inlet and outlet microorganism concentrations	All biodosimetry data tabulated in Appendix A.
Collimated Beam Testing Results: Volume and depth of microbial suspension, UVA of microbial suspension, irradiance measured before and after each exposure, Petri factor calculations, UV dose calculations, and derivation of UV dose-response equation including statistical methods and confidence intervals.	Collimated beam data tabulated in Appendix A includes UV dose calculations (Petri factors, suspension depth, UVA, and measured irradiance) and measured log inactivation of replicates. Analysis of collimated beam data to derive dose response curves provided in Section 5.4.1.
QA/QC Checks: Challenge microorganism QA/QC including blanks, controls, and stability analysis; measurement uncertainty of radiometer, data of most recent calibration, and results of reference checks; measurement uncertainty of UV sensors and results of reference UV sensor checks; measurements uncertainty if flowmeter, UV spectrophotometer, and any other measuring equipment used during full-scale testing.	Microbial QA/QC including blanks, controls, and stability data given in Appendix A. Chlorine measurement data given in Section 5.1. Measurement uncertainty of the radiometer provided in Appendix D. UV sensor measurement uncertainty discussed in Sections 2.5. Reference check data provided in Appendix A. Measurement uncertainty of flowmeter provided in Section 3 and verified in Appendix F. UV spectrophotometer QA/QC data given in Appendix E.
Calculation of the Validated Dose, Log Inactivation Credit and Validated Operating conditions: RED, VF, dose monitoring equation, log inactivation credit for target pathogens, validated operating conditions.	Calculated log inactivation and RED values provided in Appendix A. Validated range provided in Section 5.4.5.

Table 7.4 Compliance to UVDGM Checklist 5.4: QA/QC	
Uncertainty in Measuring Equipment: Flow meter, UV spectro-photometer, UV sensors, radiometer.	• Flowmeter - Section 3. The working range of the 12-in flowmeter was 0.5 to 15.3 MGD. The measured flow was displayed on an LCD with an accuracy of ±0.5 percent at flow rates greater than 1 mgd and ±1.5 percent at flow rates between 0.25 to 1 mgd. The working range of the 4-in flowmeter was 5 to 620 GPM. The measured flow rate was displayed on an LCD with a system accuracy of ± 0.5 percent from 26.2 to 620.8 GPM. Uncertainty meets 5 percent UVDGM criteria. • UV spectrophotometer - Appendix E. Accuracy confirmed using NIST wavelength and absorbance standards. Uncertainty meets 10 percent UVDGM criterion. • UV sensors - Section 5.3.2 shows that duty UV sensors were shown to be within -6.34 to 1.31 percent of the average reference UV sensor reading. Uncertainty meets 10 percent UVDGM criteria. • Radiometer - Appendix D. Measurement uncertainty within tolerance. Radiometer measurement verified by two other radiometers.
QA/QC of Microbial Samples: Reactor controls, reactor blanks.	Results are included in Appendix A. Controls: The differences in the log concentration between individual effluent and influent control samples ranged from -0.138 to 0.031 log and averaged -0.020 log, indicating that there was no change in test microbe concentration through the UV reactor when the lamps were turned off. Blanks: The influent MS2 blanks had concentrations that ranged from 1.94 to 66,333 PFU per mL, which would have added a maximum of 1.07 log to the minimum influent concentration measured during biodosimetry testing. This amount would have been measured during the collection of the influent samples. The T1UV phage concentration in the influent blanks ranged from 0.0 to 1.72 PFU/mL, which was at most 0.17 percent of the minimum concentration used during biodosimetry testing. The MS2 phage concentrations in the effluent blanks ranged from 0.11 to 4.33 PFU/mL. The T1UV concentrations in the effluent blanks ranged from 0 PFU/mL to 0.17. 13.5 percent of the validation data has effluent counts below 10 PFU/mL. If the background concentration of test microbes in the effluent was significant, the log inactivation through the reactor would be underestimated leading to conservative validation or the data would have been identified as an outlier and removed from the dataset.

Table 7.4 Compliance to UVDGM Checklist 5.4: QA/QC

QA/QC of Microbial Samples: Stability samples, trip controls, method blanks.	Results are included in Appendix A. Method Blanks: 29 of 33 method blanks had no enumerable plaques or colonies, while one samples resulted in 0.1 PFU/mL, and three resulted in 0.5 PFU/mL, indicating that dilution waters were test microbe free and that there was little if any cross contamination of lab samples. Trip Controls: Trip controls showed changes of test microbe log concentrations ranging from -0.59 to 0.66 percent, meeting the UVDGM 3 to 5 percent criteria. Stability: MS2 influent and effluent concentrations changed at an average rate of 0.022 and 0.021 log per day, respectively. T1UV influent and effluent concentrations changed at an average rate of -0.002 and 0.004 log per day, respectively. These results indicate the samples were stable over the course of validation.
Uncertainty of Collimated Beam Testing Data: Depth of suspension, incidence irradiance, Petri factor, L/(d+L), time, and $(1\text{-}10^{-ad})/ad$	• Depth of suspension (d) ± 4.4% (UVDGM <10%) • Average incident irradiance (E_s) ± 6.6% (UVDGM <8%) • Petri Factor (P_f) ± 1% (UVDGM <5%) • L/(d + L) ± 1.7% (UVDGM <1%) • Time (t) ± 3.3% (UVDGM <5%) • $(1 – 10^{-ad})/ad$ < 0.77% (UVDGM <5%) • The overall uncertainty for the UV dose calculation, calculated as the square root of the sum of squares of the individual uncertainties, is estimated as 7%, less than the 12% uncertainty expected based on the UVDGM criteria. i.e. 12% = $(8^2+5^2+1^2+5^2+5^2)^{0.5}$
Uncertainty of the dose response.	• Uncertainty of the UV dose-response curve is described in Chapter 6. U_{DR} defined as a confidence interval using the statistical approach presented in Appendix J. The dose response curve with the most conservative uncertainty (March 19, 2019) is used for determining the value of the U_{DR} as a function of the log inactivation.

Table 7.5 Compliance to UVDGM Checklist 5.5: Validation Report Review	
Does validation meet QA/QC criteria?	Validation met QA/QC criteria evaluated.
Does mixing and sample port location meet recommendations?	Yes. A static mixer was used before the inlet sample port. The inlet sample port was located 21 pipe diameters downstream of the injection port through both the low and high flow configurations. Although there was no static mixer downstream of the reactors, the outlet sample port was located approximately 46, 26, and 19 pipe diameters downstream from the WF-115-4, WF-125-6, and WF-225-8 reactors, respectively. This gave time for adequate mixing. Inlet and outlet sample ports were not impacted by UV light from reactor. See Sections 3 and 4 for details.
Do inlet and outlet piping at the WTP result in dose delivery equal to or better than validation?	Compliance depends on UV system piping used at WTP.
Were the collimated beam test results and full-scale reactor tests performed on the same day for a given test condition and using the same stock of challenge microorganisms?	Yes. Stock solutions of a given microorganism prepared by GAP were combined to give a single stock solution. Dose-response measured each day of testing. See Section 5.4.1.
Is the UV sensitivity of the challenge microorganism and the overall shape of the dose-response curve consistent with the expected inactivation behavior of that challenge microorganism?	MS2 and T1UV UV dose-response was found to be consistent with expected UV dose-response based on previous validations. See confidence bands in dose-response figures provided in Section 5 and Appendix I.
Does the validation test design account for lamp fouling and aging, minimum UVT, and maximum flow rate expected to occur at the WTP?	Compliance depends on UV system design criteria and water quality at WTP.
Is the reactor equipped with a germicidal UV sensor? Is the polychromatic bias incorporated into the validation factor?	Reactors use germicidal UV sensors. The lamps used in the WF-115-4, WF-125-6, and WF-225-8 UV reactors are polychromatic, so a polychromatic bias factor was incorporated into the validation factor for each reactor. See Section 6 for details.
Was validation testing conducted using an organism other than MS2 phage and *B. subtilis*? If yes, was a correction factor assessed and applied to the validation results?	Validation was conducted using MS2 and T1UV phage. Correction factor for action spectra was applied. See Section 6 for details.

Table 7.5 Compliance to UVDGM Checklist 5.5: Validation Report Review	
Was the minimum number of test conditions evaluated as specified in section 5.6.2?	Yes. Test conditions selected to evaluate dose delivery at multiple flows, UVTs, and lamp power settings. See Appendix A.
Was the empirical equation developed using standard statistical methods (e.g. multivariate linear regression)?	Yes. Appropriate equation identified using multi-variate linear regressions. Final equation developed using non-linear regression that minimized sum square of absolute errors in units of log inactivation. See Section 5.4.2.
Does the validation report include an analysis of goodness of fit and bias for the dose monitoring equation?	Yes. p-statistics used to define statistically valid terms in dose monitoring equation (see Table 5.5). Comparison of predicted and measured log i showed no bias.
Does the validation factor include both the B_{RED} and U_{IN}?	RED bias is set to 1.0 with target *Cryptosporidium*, *Giardia*, and adenovirus. See Section 6. U_{IN} incorporated into validation factor. See Section 6.
If U_S or U_{DR} did not meet the QA/QC criteria, were they also included in the VF calculation?	U_S met UVDGM criteria of 10%. U_{DR} met UVDGM criteria of 15%, and was not incorporated into the validation factor calculations for MS2, T1UV, or *Giardia/Cryptosporidium* REDs since the calculated value did not exceeded 15 percent.
For the range of UVT values and flowrates expected to occur at the water system, is the validated dose ≥ required dose for the system's target pathogen and log inactivation?	Compliance depends on UV system design criteria and water quality at WTP.

Appendix A

FUNCTIONAL AND BIODOSIMETRIC TEST DATA

Table A.1a UV System Power Consumption

Reactor	Date	Lamp Ampere	Total Power (kW)	Total Apparent Power (kVA)	Power Factor
WF-115-4	1/10/2019	11.00	1.69	2.10	0.80
WF-115-4	1/10/2019	8.20	1.16	1.40	0.83
WF-115-4	1/10/2019	6.80	0.91	1.06	0.86
WF-115-4	1/10/2019	5.00	0.60	0.63	0.95
WF-115-4	1/10/2019	9.60	1.42	1.75	0.81
WF-115-4	1/10/2019	8.20	1.16	1.40	0.83
WF-115-4	1/10/2019	9.60	1.42	1.74	0.82
WF-115-4	1/10/2019	4.90	0.60	0.63	0.95
WF-115-4	1/10/2019	6.80	0.92	1.07	0.86
WF-115-4	1/10/2019	11.00	1.70	2.12	0.80
WF-115-4	1/10/2019	8.20	1.16	1.41	0.82
WF-115-4	1/10/2019	6.80	0.95	1.11	0.86
WF-115-4	1/10/2019	9.60	1.41	1.75	0.81
WF-115-4	1/10/2019	5.00	0.61	0.63	0.97
WF-115-4	1/10/2019	11.00	1.70	2.12	0.80
WF-115-4	1/10/2019	11.00	1.70	2.10	0.81
WF-115-4	1/10/2019	9.60	1.40	1.74	0.80
WF-115-4	1/10/2019	5.00	0.61	0.64	0.95
WF-115-4	1/10/2019	6.80	0.92	1.05	0.88
WF-115-4	1/10/2019	8.20	1.15	1.40	0.82
WF-115-4	1/10/2019	9.60	1.41	1.74	0.81
WF-115-4	1/10/2019	8.20	1.16	1.40	0.83
WF-115-4	1/10/2019	9.60	1.42	1.75	0.81
WF-115-4	1/10/2019	8.20	1.15	1.40	0.82
WF-115-4	1/10/2019	6.90	0.92	1.05	0.88
WF-115-4	1/10/2019	6.80	0.91	1.06	0.86
WF-115-4	1/10/2019	11.00	1.68	2.09	0.80
WF-115-4	1/10/2019	5.30	0.64	0.68	0.94
WF-115-4	1/10/2019	11.00	1.70	2.10	0.81
WF-115-4	1/9/2019	11.00	1.81	2.19	0.83
WF-115-4	1/9/2019	11.00	1.81	2.19	0.83
WF-115-4	1/9/2019	11.00	1.80	2.19	0.82
WF-115-4	1/9/2019	11.00	1.80	2.18	0.83
WF-115-4	1/16/2019	11.00	1.70	2.09	0.81
WF-115-4	1/16/2019	11.00	1.70	2.10	0.81
WF-115-4	1/16/2019	7.04	0.96	1.12	0.86
WF-115-4	1/16/2019	7.04	0.96	1.12	0.86
WF-115-4	1/16/2019	7.04	0.99	1.13	0.88
WF-115-4	1/16/2019	7.04	0.99	1.15	0.86
WF-115-4	3/12/2019	5.10	0.66	0.68	0.97
WF-115-4	3/12/2019	5.40	0.69	0.73	0.95
WF-115-4	3/12/2019	5.30	0.68	0.72	0.94
WF-115-4	3/12/2019	5.30	0.69	0.72	0.96
WF-115-4	3/12/2019	10.90	1.68	2.09	0.80

Table A.1a UV System Power Consumption

Reactor	Date	Lamp Ampere	Total Power (kW)	Total Apparent Power (kVA)	Power Factor
WF-115-4	3/12/2019	7.15	0.99	1.12	0.88
WF-115-4	3/12/2019	7.15	0.99	1.12	0.88
WF-115-4	3/12/2019	9.10	1.33	1.61	0.83
WF-115-4	3/12/2019	10.95	1.68	2.06	0.82
WF-115-4	3/13/2019	5.20	0.66	0.70	0.94
WF-115-4	3/13/2019	9.60	1.41	1.72	0.82
WF-115-4	3/13/2019	11.00	1.71	2.08	0.82
WF-115-4	3/13/2019	11.00	1.71	2.07	0.83
WF-115-4	3/13/2019	11.00	1.71	2.07	0.83
WF-115-4	3/13/2019	9.10	1.61	2.00	0.81
WF-125-6	1/10/2019	10.00	2.60	2.96	0.88
WF-125-6	1/10/2019	10.10	2.62	2.98	0.88
WF-125-6	1/10/2019	7.40	1.80	2.27	0.79
WF-125-6	1/10/2019	9.00	2.27	2.60	0.87
WF-125-6	1/10/2019	7.40	1.80	2.26	0.80
WF-125-6	1/10/2019	8.90	2.27	2.61	0.87
WF-125-6	1/10/2019	6.20	1.45	2.20	0.66
WF-125-6	1/10/2019	6.20	1.46	2.20	0.66
WF-125-6	1/10/2019	4.60	1.03	2.38	0.43
WF-125-6	1/10/2019	7.40	1.81	2.27	0.80
WF-125-6	1/10/2019	8.90	2.28	2.61	0.87
WF-125-6	1/10/2019	10.00	2.60	2.95	0.88
WF-125-6	1/10/2019	4.50	1.03	2.38	0.43
WF-125-6	1/10/2019	6.20	1.47	2.20	0.67
WF-125-6	1/10/2019	10.00	2.60	2.96	0.88
WF-125-6	1/10/2019	8.90	2.28	2.62	0.87
WF-125-6	1/10/2019	7.40	1.80	2.26	0.80
WF-125-6	1/10/2019	4.60	1.03	2.40	0.43
WF-125-6	1/10/2019	6.20	1.46	2.20	0.66
WF-125-6	1/10/2019	10.00	2.59	2.93	0.88
WF-125-6	1/10/2019	8.90	2.27	2.60	0.87
WF-125-6	1/10/2019	7.40	1.81	2.27	0.80
WF-125-6	1/10/2019	4.50	1.04	2.41	0.43
WF-125-6	1/10/2019	6.20	1.46	2.20	0.66
WF-125-6	1/10/2019	8.90	2.26	2.59	0.87
WF-125-6	1/10/2019	7.40	1.81	2.27	0.80
WF-125-6	1/10/2019	10.00	2.58	2.93	0.88
WF-125-6	1/10/2019	6.20	1.46	2.18	0.67
WF-125-6	1/10/2019	4.50	1.04	2.40	0.43
WF-125-6	1/10/2019	7.40	1.81	2.27	0.80
WF-125-6	1/9/2019	10.00	2.73	3.11	0.88
WF-125-6	1/9/2019	10.00	2.73	3.11	0.88
WF-125-6	1/9/2019	10.00	2.73	3.11	0.88
WF-125-6	1/9/2019	10.00	2.73	3.11	0.88

Table A.1a UV System Power Consumption

Reactor	Date	Lamp Ampere	Total Power (kW)	Total Apparent Power (kVA)	Power Factor
WF-125-6	1/16/2019	10.00	2.59	2.95	0.88
WF-125-6	3/12/2019	6.00	1.40	2.08	0.67
WF-125-6	3/12/2019	4.70	1.04	2.22	0.47
WF-125-6	3/12/2019	4.70	1.04	2.22	0.47
WF-125-6	3/12/2019	9.40	2.40	2.72	0.88
WF-125-6	3/12/2019	4.70	1.04	2.22	0.47
WF-125-6	3/12/2019	6.30	1.47	2.09	0.70
WF-125-6	3/12/2019	5.60	1.28	2.11	0.61
WF-125-6	3/12/2019	8.30	2.06	2.40	0.86
WF-125-6	3/12/2019	10.00	2.58	2.94	0.88
WF-125-6	3/12/2019	10.00	2.59	2.93	0.88
WF-125-6	3/12/2019	10.00	2.58	2.97	0.87
WF-225-8	1/10/2019	6.40	2.87	4.07	0.71
WF-225-8	1/10/2019	4.50	1.87	4.44	0.42
WF-225-8	1/10/2019	10.10	5.19	5.57	0.93
WF-225-8	1/10/2019	7.50	3.54	4.26	0.83
WF-225-8	1/10/2019	8.75	4.32	4.78	0.90
WF-225-8	1/10/2019	6.30	2.86	4.07	0.70
WF-225-8	1/10/2019	7.50	3.55	4.27	0.83
WF-225-8	1/10/2019	4.60	1.88	4.40	0.43
WF-225-8	1/10/2019	8.75	4.32	4.78	0.90
WF-225-8	1/10/2019	10.00	5.12	5.50	0.93
WF-225-8	1/10/2019	10.00	5.12	5.50	0.93
WF-225-8	1/10/2019	7.50	3.55	4.26	0.83
WF-225-8	1/10/2019	6.35	2.86	4.07	0.70
WF-225-8	1/10/2019	4.55	1.89	4.42	0.43
WF-225-8	1/10/2019	8.75	4.32	4.77	0.91
WF-225-8	1/10/2019	4.55	1.88	4.42	0.43
WF-225-8	1/10/2019	6.30	2.85	4.08	0.70
WF-225-8	1/10/2019	10.00	5.14	5.52	0.93
WF-225-8	1/10/2019	8.80	4.33	4.78	0.91
WF-225-8	1/10/2019	7.55	3.55	4.27	0.83
WF-225-8	1/10/2019	6.35	2.86	4.09	0.70
WF-225-8	1/10/2019	4.50	1.86	4.47	0.42
WF-225-8	1/10/2019	7.50	3.56	4.27	0.83
WF-225-8	1/10/2019	8.75	4.33	4.79	0.90
WF-225-8	1/10/2019	10.00	5.14	5.51	0.93
WF-225-8	1/8/2019	10.00	5.28	5.65	0.93
WF-225-8	1/8/2019	10.00	5.28	5.66	0.93
WF-225-8	3/19/2019	9.30	4.72	5.16	0.91
WF-225-8	3/19/2019	6.40	2.97	4.00	0.74
WF-225-8	3/19/2019	9.40	4.79	5.20	0.92
WF-225-8	3/19/2019	5.08	2.25	4.18	0.54
WF-225-8	3/19/2019	9.23	4.66	5.11	0.91

Table A.1a UV System Power Consumption

Reactor	Date	Lamp Ampere	Total Power (kW)	Total Apparent Power (kVA)	Power Factor
WF-225-8	3/19/2019	4.70	2.02	4.27	0.47
WF-225-8	3/19/2019	8.65	4.31	4.77	0.90
WF-225-8	3/19/2019	6.80	3.20	4.04	0.79
WF-225-8	3/19/2019	9.90	5.13	5.58	0.92
WF-225-8	3/19/2019	9.95	5.16	5.61	0.92
WF-225-8	3/19/2019	9.95	5.15	5.61	0.92
WF-225-8	3/19/2019	9.95	5.16	5.61	0.92
WF-225-8	3/19/2019	7.60	3.68	4.25	0.87
WF-225-8	3/19/2019	9.95	5.16	5.63	0.92
WF-225-8	3/19/2019	7.60	3.63	4.25	0.85
WF-225-8	3/19/2019	4.65	1.99	4.30	0.46
WF-225-8	3/19/2019	4.60	1.99	4.30	0.46
WF-225-8	3/19/2019	4.70	2.01	4.22	0.48
WF-225-8	3/19/2019	4.70	2.02	4.26	0.47

Table A.1b Duty UV Sensor vs. Reference UV Sensor Checks

Date	Reactor	Average UVT (%)	Lamp Ampere	Sensor Range (W/m^2)	Reference Sensor 1 (W/m^2)	Reference Sensor 2 (W/m^2)	Reference Sensor 3 (W/m^2)	Duty Sensor Before (W/m^2)	Duty Sensor After (W/m^2)	Average Reference Sensor (W/m^2)	Average Duty Sensor (W/m^2)
1/10/2019	WF-115-4	67.92	5	300	15.15	14.91	14.56	14.80	14.74	14.89	14.69
					15.23	15.03	14.53	14.91	14.33		
					15.17	14.94	14.45	14.97	14.39		
1/10/2019	WF-225-8	67.81	4.5	150	3.82	3.78	3.52	3.85	3.80	3.72	3.82
					3.91	3.74	3.57	3.80	3.85		
					3.85	3.74	3.51	3.82	3.81		
3/11/2019	WF-115-4	99.32	11	300	139.2	139.1	134.4	140.3	137.5	137.85	138.94
					139.5	139.4	135	139.7	137.9		
					139.6	139.8	134.9	140.5	137.9		
					139.3	138.8	135.1	140.0	137.8		
					139.3	139.6	134.8	140.2	137.6		
3/11/2019	WF-125-6	99.32	10	150	71.5	68.5	69.6	69.4	68.1	69.93	69.11
					71.7	68.5	69.6	69.0	68.5		
					71.9	68.5	69.6	70.2	68.5		
					71.4	68.5	69.7	69.9	68.6		
					71.6	68.7	69.7	70.2	68.7		
3/11/2019	WF-225-8	99.32	10	300	154.1	149.2	148.0	158.5	157.1	150.61	157.86
					154.1	149.2	148.2	158.5	157.1		
					154.3	149.3	148.2	158.6	157.4		
					154.2	149.0	148.7	158.6	157.3		
					154.5	149.4	148.7	158.4	157.1		
3/14/2019	WF-125-6	99.53	6.7	150	38.7	36.7	37.1	37.9	37	37.44	37.40
					38.7	36.7	37.1	38.1	37		
					38.6	36.7	36.9	37.6	37.2		
					38.5	36.6	37.0	37.8	36.6		
					38.5	36.6	37.2	37.9	36.9		
3/18/2019	WF-125-6	70.24	9.8	150	4.42	4.42	4.40	4.40	4.40	4.41	4.40
3/18/2019	WF-225-8	70.03	10	150	6.41	6.33	6.23	6.37	6.40	6.32	6.39
3/18/2019	WF-225-8	70.03	10	300	5.29	5.26	5.26	5.30	5.30	5.27	5.30
3/20/2019	WF-225-8	99.22	10	300	166.5	159.9	163.1	178.4	168.1	163.60	173.97
					166.8	160.7	163.9	178.8	169.1		
					167.1	160.6	163.8	178.7	170.7		

Table A.1c **Functional Sensor Testing: UVT, Lamp Ampere, and UV Sensor Intensity Readings**

Reactor	UVT (%)	Lamp Ampere	Sensor Measured (W/m^2)	S_{pred} (W/m^2)	Residuals (%)
WF-115-4	65.11	11.0	56.04	57.36	-2.30
WF-115-4	64.66	9.7	46.02	46.45	-0.92
WF-115-4	64.66	7.9	34.16	34.04	0.36
WF-115-4	64.73	6.7	26.68	26.61	0.28
WF-115-4	64.07	5.2	17.83	17.58	1.41
WF-115-4	86.96	5.3	45.90	45.47	0.95
WF-115-4	87.03	6.1	56.48	56.39	0.15
WF-115-4	86.98	7.9	82.92	83.28	-0.43
WF-115-4	86.88	9.3	106.60	106.24	0.34
WF-115-4	86.94	10.8	131.88	133.53	-1.23
WF-115-4	91.55	11.0	163.08	160.93	1.34
WF-115-4	91.61	9.7	133.16	133.29	-0.10
WF-115-4	91.55	8.1	103.13	101.24	1.87
WF-115-4	91.35	6.7	77.62	75.44	2.88
WF-115-4	91.46	5.1	49.92	50.09	-0.34
WF-115-4	94.95	5.0	53.89	54.58	-1.26
WF-115-4	94.77	6.3	76.43	76.99	-0.73
WF-115-4	94.82	7.9	109.08	108.64	0.40
WF-115-4	94.52	9.4	142.25	139.99	1.62
WF-115-4	94.68	10.9	174.61	176.09	-0.84
WF-115-4	99.42	10.9	207.20	204.92	1.11
WF-115-4	99.19	8.2	133.28	132.20	0.81
WF-115-4	99.35	5.0	61.89	62.81	-1.47
WF-115-4	99.33	11.0	204.32	207.19	-1.38
WF-115-4	99.45	11.0	202.60	207.97	-2.58
WF-115-4	99.55	11.1	215.50	211.50	1.89
WF-115-4	99.32	5.1	63.14	64.67	-2.36
WF-125-6	65.24	10.1	2.80	2.94	-4.92
WF-125-6	64.97	8.9	2.39	2.38	0.33
WF-125-6	64.87	7.5	1.92	1.83	4.75
WF-125-6	86.93	5.0	8.76	8.73	0.29
WF-125-6	87.08	6.1	11.71	11.90	-1.59
WF-125-6	87.05	7.4	15.56	15.78	-1.37
WF-125-6	87.06	8.6	19.20	19.71	-2.61
WF-125-6	87.11	10.0	24.42	24.76	-1.37
WF-125-6	91.47	10.0	38.46	39.29	-2.11
WF-125-6	91.43	8.9	32.58	32.96	-1.14
WF-125-6	91.55	7.6	26.28	26.44	-0.62
WF-125-6	91.47	6.3	20.37	19.88	2.49
WF-125-6	91.55	5.2	15.56	15.10	3.03
WF-125-6	94.69	5.2	21.27	21.31	-0.18
WF-125-6	94.80	6.3	28.88	28.63	0.86

Table A.1c **Functional Sensor Testing: UVT, Lamp Ampere, and UV Sensor Intensity Readings**

Reactor	UVT (%)	Lamp Ampere	Sensor Measured (W/m^2)	S_{pred} (W/m^2)	Residuals (%)
WF-125-6	94.85	7.4	36.54	36.51	0.07
WF-125-6	94.80	8.6	46.51	45.33	2.60
WF-125-6	94.59	10.0	58.16	55.33	5.12
WF-125-6	99.52	10.0	97.86	97.06	0.83
WF-125-6	99.21	7.8	66.90	64.86	3.14
WF-125-6	99.33	5.2	34.85	36.15	-3.61
WF-125-6	99.42	10.0	95.05	95.93	-0.92
WF-125-6	99.60	10.1	98.30	99.42	-1.13
WF-125-6	99.46	5.0	33.44	34.64	-3.47
WF-225-8	66.56	5.25	7.82	7.76	0.80
WF-225-8	66.27	6.25	9.89	9.96	-0.68
WF-225-8	66.39	7.55	13.23	13.38	-1.15
WF-225-8	66.28	8.85	17.05	16.95	0.57
WF-225-8	66.31	10.00	20.59	20.47	0.59
WF-225-8	87.78	10.00	81.47	82.10	-0.77
WF-225-8	87.78	8.80	66.96	67.56	-0.89
WF-225-8	87.66	7.50	52.11	52.45	-0.64
WF-225-8	87.87	6.30	40.89	40.81	0.19
WF-225-8	87.47	5.20	29.88	29.55	1.13
WF-225-8	91.74	5.20	41.09	41.08	0.03
WF-225-8	91.40	6.25	53.43	52.95	0.91
WF-225-8	91.44	7.30	67.18	67.34	-0.24
WF-225-8	91.57	8.75	88.92	89.76	-0.93
WF-225-8	91.70	9.90	108.42	109.53	-1.01
WF-225-8	94.87	9.80	141.14	140.30	0.60
WF-225-8	94.55	8.85	120.78	116.81	3.40
WF-225-8	95.06	7.55	93.87	95.73	-1.94
WF-225-8	94.71	6.35	73.88	71.30	3.62
WF-225-8	95.40	5.15	52.63	54.95	-4.21
WF-225-8	99.37	5.05	73.30	76.59	-4.30
WF-225-8	99.08	5.15	80.52	76.77	4.89
WF-225-8	99.58	6.15	105.51	105.62	-0.11
WF-225-8	99.54	7.45	140.80	141.04	-0.17
WF-225-8	99.75	8.65	178.87	180.83	-1.09
WF-225-8	99.50	9.90	217.87	216.96	0.42

Table A.2 Test Conditions for Bioassay Testing						
Reactor	**Sensor Range (W/m^2)**	**Microbe**	**Test ID**	**UVT (%)**	**Lamp Ampere**	**Flow (m^3/hr)**
WF-115-4	300	MS2	402	99.25	11.0	105.2
WF-115-4	300	MS2	401	99.15	11.0	50.63
WF-115-4	300	MS2	404	69.46	11.0	31.09
WF-115-4	300	MS2	403	65.36	11.0	5.94
WF-115-4	300	MS2	409	94.66	11.0	24.88
WF-115-4	300	MS2	422	99.22	7.0	99.35
WF-115-4	300	MS2	408	95.35	7.0	99.36
WF-115-4	300	MS2	413	87.62	7.0	14.77
WF-115-4	300	T1UV	405	98.89	5.1	100.3
WF-115-4	300	T1UV	406	98.73	5.4	40.01
WF-115-4	300	T1UV	410	94.50	5.3	64.98
WF-115-4	300	T1UV	414	87.90	5.3	114.1
WF-115-4	300	T1UV	411	94.77	10.9	95.42
WF-115-4	300	T1UV	416	87.83	7.2	25.18
WF-115-4	300	T1UV	419	69.89	7.2	24.95
WF-115-4	300	T1UV	420	70.00	9.1	25.10
WF-115-4	300	T1UV	423	70.13	11.0	100.4
WF-115-4	300	MS2	407	97.42	5.2	5.229
WF-115-4	300	MS2	417	86.52	9.6	5.255
WF-115-4	300	MS2	421	69.30	11.0	5.138
WF-115-4	300	MS2	412	94.28	11.0	12.42
WF-115-4	300	MS2	415	87.22	9.1	10.83
WF-125-6	150	MS2	602	97.82	10.0	200.6
WF-125-6	150	MS2	601	98.18	10.0	76.39
WF-125-6	150	MS2	604	68.23	10.0	30.67
WF-125-6	150	MS2	603	71.45	10.0	9.856
WF-125-6	150	T1UV	605	99.23	6.0	198.5
WF-125-6	150	T1UV	607	97.76	4.7	70.19
WF-125-6	150	T1UV	610	94.11	4.7	134.8
WF-125-6	150	T1UV	611	94.54	9.4	159.3
WF-125-6	150	T1UV	614	87.89	4.7	230.3
WF-125-6	150	T1UV	616	87.50	6.3	45.14
WF-125-6	150	T1UV	619	69.81	5.6	25.03
WF-125-6	150	T1UV	620	69.80	8.3	25.16
WF-125-6	150	T1UV	621	69.98	10.0	22.32
WF-125-6	150	T1UV	622	70.17	10.0	200.6
WF-125-6	150	MS2	617	85.91	10.0	10.14
WF-125-6	150	MS2	612	95.35	9.9	22.56
WF-125-6	150	MS2	606	97.84	9.9	28.46
WF-125-6	150	MS2	615	88.65	8.3	21.94
WF-125-6	150	MS2	613	87.68	6.3	29.94
WF-125-6	150	MS2	609	94.23	10.0	49.65
WF-125-6	150	MS2	608	94.72	6.8	197.1
WF-125-6	150	MS2	623	97.87	6.0	198.7
WF-225-8	300	MS2	802	99.06	10.0	502.6
WF-225-8	300	MS2	801	97.99	10.0	261.3
WF-225-8	300	MS2	804	70.11	10.0	98.26

Table A.2 Test Conditions for Bioassay Testing

Reactor	Sensor Range (W/m^2)	Microbe	Test ID	UVT (%)	Lamp Ampere	Flow (m^3/hr)
WF-225-8	300	MS2	803	69.91	10.0	14.61
WF-225-8	300	T1UV	820	70.01	9.3	49.74
WF-225-8	300	T1UV	817	87.48	6.4	99.10
WF-225-8	300	T1UV	821	70.28	9.4	99.39
WF-225-8	300	T1UV	807	99.17	5.1	140.6
WF-225-8	300	T1UV	812	95.93	9.2	299.2
WF-225-8	300	T1UV	811	95.26	4.7	349.9
WF-225-8	300	T1UV	805	99.64	8.7	498.9
WF-225-8	300	T1UV	815	88.34	6.8	498.7
WF-225-8	300	T1UV	822	70.84	9.9	496.8
WF-225-8	300	MS2	818	87.63	10.0	23.03
WF-225-8	300	MS2	806	99.10	10.0	41.74
WF-225-8	300	MS2	810	94.26	10.0	99.89
WF-225-8	300	MS2	813	94.18	7.6	24.54
WF-225-8	300	MS2	819	69.91	10.0	39.95
WF-225-8	300	MS2	816	87.78	7.6	48.93
WF-225-8	300	MS2	808	98.39	4.7	496.8
WF-225-8	300	MS2	809	95.15	4.6	499.2
WF-225-8	300	MS2	814	87.49	4.7	500.3
WF-125-6	150	T1UV	Control	99.29	0	198.7
WF-125-6	150	MS2	Control 1	99.45	0	61.71
WF-115-4	300	MS2	Control 4	99.11	0	100.2
WF-115-4	300	MS2	Control 5	70.47	0	49.26
WF-125-6	150	MS2	Control 6	99.50	0	198.7
WF-225-8	300	T1UV	Control 7	99.59	0	494.5

Table A.3 Sample Replicates for UVT Measurements

Date	ID	UVT (%)				
		1	2	3	Average	Standard Deviation
1/9/2019	402	99.28	99.27	99.20	99.25	0.04
1/9/2019	401	99.18	99.12	99.14	99.15	0.03
1/9/2019	404	69.53	69.43	69.41	69.46	0.06
1/9/2019	403	65.32	65.36	65.41	65.36	0.05
1/16/2019	409	94.80	94.62	94.57	94.66	0.12
1/16/2019	422	99.23	99.24	99.18	99.22	0.03
1/16/2019	408	95.33	95.34	95.39	95.35	0.03
1/16/2019	413	87.66	87.64	87.56	87.62	0.05
3/12/2019	405	98.79	99.08	98.80	98.89	0.16
3/12/2019	406	98.76	98.74	98.68	98.73	0.04
3/12/2019	410	94.52	94.51	94.46	94.50	0.03
3/12/2019	414	87.91	87.86	87.93	87.90	0.04
3/12/2019	411	94.80	94.68	94.84	94.77	0.08
3/12/2019	416	87.94	87.76	87.80	87.83	0.09
3/12/2019	419	69.97	69.85	69.84	69.89	0.07
3/12/2019	420	70.08	69.93	70.00	70.00	0.08
3/12/2019	423	70.07	70.26	70.06	70.13	0.11
3/13/2019	407	97.43	97.43	97.41	97.42	0.01
3/13/2019	417	86.69	86.53	86.35	86.52	0.17
3/13/2019	421	69.28	69.38	69.24	69.30	0.07
3/13/2019	412	94.30	94.29	94.24	94.28	0.03
3/13/2019	415	87.22	87.26	87.19	87.22	0.04
1/9/2019	602	97.76	97.81	97.89	97.82	0.07
1/9/2019	601	98.14	98.19	98.20	98.18	0.03
1/9/2019	604	68.21	68.19	68.28	68.23	0.05
1/16/2019	603	71.68	71.33	71.33	71.45	0.20
3/12/2019	605	99.37	99.06	99.25	99.23	0.16
3/12/2019	607	97.74	97.68	97.85	97.76	0.09
3/12/2019	610	94.22	94.02	94.10	94.11	0.10
3/12/2019	611	94.49	94.59		94.54	0.07
3/12/2019	614	88.01	87.75	87.92	87.89	0.13
3/12/2019	616	87.50	87.54	87.46	87.50	0.04
3/12/2019	619	69.90	69.80	69.74	69.81	0.08
3/12/2019	620	69.72	69.78	69.90	69.80	0.09
3/12/2019	621	69.93	70.04	69.96	69.98	0.06
3/12/2019	622	70.04	70.24	70.22	70.17	0.11
3/14/2019	617	85.88	86.02	85.84	85.91	0.09
3/14/2019	612	95.30	95.20	95.54	95.35	0.17
3/14/2019	606	97.78	98.05	97.69	97.84	0.19
3/14/2019	615	88.67	88.51	88.78	88.65	0.14
3/14/2019	613	87.64	87.70	87.69	87.68	0.03
3/14/2019	609	94.24	94.24	94.20	94.23	0.02
3/14/2019	608	94.78	94.62	94.77	94.72	0.09

Table A.3 Sample Replicates for UVT Measurements						
Date	ID	UVT (%)				
		1	2	3	Average	Standard Deviation
3/14/2019	623	97.59	98.01	98.00	97.87	0.24
1/8/2019	802	99.07	99.10	99.00	99.06	0.05
1/8/2019	801	97.94	97.99	98.03	97.99	0.05
1/8/2019	804	70.04	70.21	70.08	70.11	0.09
1/8/2019	803	69.82	69.93	69.99	69.91	0.09
3/19/2019	820	70.06	70.16	69.81	70.01	0.18
3/19/2019	817	87.50	87.47	87.48	87.48	0.02
3/19/2019	821	70.32	70.29	70.22	70.28	0.05
3/19/2019	807	99.32	99.13	99.07	99.17	0.13
3/19/2019	812	95.89	95.94	95.96	95.93	0.04
3/19/2019	811	95.18	95.30	95.29	95.26	0.07
3/19/2019	805	99.67	99.62	99.64	99.64	0.03
3/19/2019	815	88.30	88.39	88.32	88.34	0.05
3/19/2019	822	70.92	70.92	70.68	70.84	0.14
3/19/2019	818	87.57	87.53	87.78	87.63	0.13
3/19/2019	806	99.02	99.07	99.20	99.10	0.09
3/19/2019	810	94.25	94.37	94.17	94.26	0.10
3/19/2019	813	94.15	94.24	94.16	94.18	0.05
3/19/2019	819	69.80	70.07	69.85	69.91	0.14
3/19/2019	816	87.73	87.72	87.89	87.78	0.10
3/19/2019	808	98.60	98.21	98.35	98.39	0.20
3/19/2019	809	95.22	95.20	95.02	95.15	0.11
3/19/2019	814	87.42	87.58	87.48	87.49	0.08
3/12/2019	Control	99.30	99.28	99.30	99.29	0.01
1/9/2019	Control 1	99.57	99.40	99.38	99.45	0.10
1/16/2019	Control 4	99.03	99.28	99.03	99.11	0.14
3/13/2019	Control 5	70.50	70.70	70.20	70.47	0.25
3/14/2019	Control 6	99.50	99.50	99.50	99.50	0.00
3/19/2019	Control 7	99.65	99.52	99.60	99.59	0.07

Table A.4a Data Collected to Determine the UV Dose Response

Date	ID	Microbe	UV Dose (mJ/cm^2)	Rep 1	Rep 2	Rep 3	Average	log i
				PFU/mL	PFU/mL	PFU/mL	Log	
8-Jan-19	101	MS2	0.000	11200000.0	11400000.0	12100000.0	7.063	0.010
			20.064	790000.0	1120000.0	1010000.0	5.988	1.085
			39.985	120000.0	98000.0	133000.0	5.068	2.005
			59.512	19300.0	17200.0	15700.0	4.241	2.832
			79.955	2680.0	3040.0	3820.0	3.502	3.571
			100.493	765.0	605.0	725.0	2.844	4.229
			121.155	181.0	191.0	188.0	2.271	4.802
			0.000	13200000.0	11300000.0	11800000.0	7.083	-0.010
			19.927	1080000.0	1080000.0	1020000.0	6.025	1.048
			40.045	117000.0	99000.0	101000.0	5.024	2.049
			59.919	19300.0	17500.0	18600.0	4.266	2.807
			79.872	3580.0	3360.0	4720.0	3.590	3.483
			101.363	840.0	795.0	805.0	2.910	4.163
			122.487	181.0	208.0	200.0	2.293	4.780
16-Jan-19	409	MS2	0.000	1860000.0	1550000.0	1480000.0	6.212	0.031
			20.010	114000.0	112000.0	120000.0	5.062	1.181
			39.880	16700.0	16000.0	16100.0	4.211	2.031
			59.900	2600.0	2740.0	2640.0	3.425	2.818
			80.160	690.0	630.0	545.0	2.794	3.449
			100.710	135.0	144.0	139.0	2.144	4.099
			121.120	42.4	33.8	31.8	1.556	4.686
			0.000	1730000.0	2060000.0	1840000.0	6.273	-0.031
			19.890	172000.0	140000.0	168000.0	5.204	1.039
			40.040	16600.0	18000.0	19000.0	4.252	1.991
			59.660	3420.0	2560.0	3560.0	3.502	2.740
			79.970	625.0	675.0	640.0	2.811	3.432
			100.430	173.0	134.0	145.0	2.178	4.065
			119.970	42.2	42.4	41.0	1.622	4.621
13-Mar-19	407	MS2	0.000	232000000.0	208000000.0	210000000.0	8.336	0.036
			19.932	14800000.0	18000000.0	17800000.0	7.227	1.145
			39.909	2740000.0	1720000.0	2060000.0	6.337	2.035
			64.939	262000.0	280000.0	252000.0	5.423	2.949
			90.273	40800.0	38600.0	34000.0	4.577	3.795
			120.028	4300.0	5350.0	4700.0	3.680	4.692
			150.040	800.0	760.0	545.0	2.846	5.526
			199.665	31.0	42.0	39.0	1.572	6.800
			0.000	270000000.0	242000000.0	256000000.0	8.408	-0.036
			20.049	20800000.0	17600000.0	19200000.0	7.283	1.089
			40.014	2720000.0	2900000.0	2960000.0	6.456	1.916
			64.671	348000.0	302000.0	326000.0	5.512	2.860
			89.945	42600.0	46200.0	46600.0	4.654	3.718
			119.616	4500.0	5400.0	5850.0	3.720	4.652
			148.867	815.0	865.0	980.0	2.948	5.424
			175.380	184.0	220.0	220.0	2.318	6.054
			200.314	48.0	52.0	67.0	1.746	6.626
			224.958	14.0	11.5	13.0	1.108	7.264

Table A.4a Data Collected to Determine the UV Dose Response

Date	ID	Microbe	UV Dose (mJ/cm^2)	Rep 1	Rep 2	Rep 3	Average	log i
				PFU/mL	PFU/mL	PFU/mL	Log	
14-Mar-19	617	MS2	0.000	134000000.0	140000000.0	114000000.0	8.112	0.039
			19.930	11200000.0	11800000.0	8200000.0	7.017	1.134
			39.943	1160000.0	1020000.0	1100000.0	6.039	2.112
			64.770	122000.0	154000.0	106000.0	5.105	3.046
			89.446	20800.0	17600.0	19000.0	4.282	3.869
			119.664	2740.0	2580.0	2060.0	3.391	4.760
			148.893	315.0	290.0	365.0	2.510	5.641
			179.808	37.0	45.0	35.0	1.591	6.559
			209.583	11.5	10.5	11.0	1.041	7.109
			0.000	168000000.0	122000000.0	174000000.0	8.189	-0.039
			19.973	11400000.0	12400000.0	12600000.0	7.084	1.067
			39.961	1700000.0	1680000.0	1620000.0	6.222	1.929
			65.122	152000.0	186000.0	170000.0	5.229	2.922
			89.932	21600.0	21000.0	20800.0	4.325	3.826
			119.954	3080.0	2960.0	2840.0	3.471	4.679
			149.485	340.0	475.0	460.0	2.628	5.522
			179.907	56.0	62.0	57.0	1.766	6.385
			210.448	6.5	12.0	11.5	1.000	7.151
19-Mar-19	819	MS2	0.000	132000000.0	132000000.0	154000000.0	8.144	0.035
			20.023	14400000.0	13600000.0	12200000.0	7.127	1.051
			39.981	1460000.0	1880000.0	1920000.0	6.244	1.935
			64.788	234000.0	176000.0	202000.0	5.310	2.869
			89.753	24400.0	24600.0	26400.0	4.400	3.778
			119.194	4280.0	3760.0	3920.0	3.601	4.578
			149.286	480.0	525.0	465.0	2.690	5.488
			174.551	98.0	108.0	108.0	2.020	6.159
			229.150	8.4	10.4	16.0	1.064	7.114
			255.059	4.0	6.6	6.0	0.7430	7.436
			0.000	170000000.0	158000000.0	162000000.0	8.213	-0.035
			20.038	17400000.0	10600000.0	11800000.0	7.123	1.056
			40.068	1720000.0	1760000.0	1660000.0	6.234	1.945
			64.724	250000.0	214000.0	212000.0	5.353	2.826
			89.396	33200.0	33200.0	31800.0	4.515	3.664
			119.055	3920.0	4020.0	4380.0	3.613	4.565
			149.842	550.0	640.0	665.0	2.791	5.387
			174.322	166.0	180.0	180.0	2.244	5.935
			198.379	45.5	44.0	50.0	1.667	6.511
			229.113	9.0	11.6	8.6	0.9883	7.190
			253.030	3.6	7.0	4.4	0.6990	7.480
12-Mar-19	416	T1UV	0.000	94000000.0	97000000.0	92000000.0	7.975	0.015
			5.012	6900000.0	6100000.0	8000000.0	6.845	1.144
			9.959	980000.0	790000.0	760000.0	5.926	2.063
			15.092	84000.0	106000.0	104000.0	4.991	2.998
			20.087	6000.0	5900.0	6700.0	3.792	4.197
			24.997	900.0	830.0	930.0	2.948	5.042
			30.398	150.0	154.0	158.0	2.188	5.802
			0.000	97000000.0	100000000.0	106000000.0	8.004	-0.015
			5.044	7000000.0	7100000.0	7200000.0	6.851	1.138
			9.959	760000.0	880000.0	980000.0	5.941	2.048
			14.896	92000.0	98000.0	101000.0	4.987	3.003
			20.128	6500.0	7600.0	9100.0	3.888	4.101
			24.823	830.0	920.0	770.0	2.924	5.065
			30.215	120.0	114.0	135.0	2.090	5.900

Table A.4a Data Collected to Determine the UV Dose Response

Date	ID	Microbe	UV Dose (mJ/cm^2)	Rep 1	Rep 2	Rep 3	Average	log i
				PFU/mL	PFU/mL	PFU/mL	Log	
19-Mar-19	820	T1UV	0.000	73000000.0	73000000.0	76000000.0	7.869	0.046
			5.007	6000000.0	6400000.0	5200000.0	6.768	1.147
			10.075	580000.0	600000.0	470000.0	5.740	2.175
			14.898	103000.0	103000.0	85000.0	4.987	2.929
			19.837	5800.0	6000.0	6100.0	3.776	4.140
			24.867	550.0	430.0	440.0	2.675	5.241
			29.968	74.0	117.0	97.0	1.982	5.933
			0.000	88000000.0	84000000.0	103000000.0	7.962	-0.046
			4.952	6100000.0	6100000.0	7500000.0	6.817	1.098
			9.984	820000.0	610000.0	770000.0	5.865	2.050
			14.968	69000.0	76000.0	66000.0	4.847	3.069
			19.957	5500.0	6400.0	7200.0	3.804	4.112
			25.123	470.0	580.0	630.0	2.748	5.168

Table A.4b Collimated Beam UV Dose Calculations

Sample ID	101
Collection Date	8-Jan-19
CB Date	9-Jan-19
Stir bar volume cm^3	0.2333
Solution volume mL	17
Petri dish diameter cm	4.9750
Sample depth cm	0.8745
Distance from UV lamp to water surface cm	45.6
Divergence Factor (DF)	0.9855
Water absorption coefficient cm^{-1}	0.006
Petri factor (A)	0.9943
Petri factor (B)	0.9905
Petri factor (C)	0.9944
Petri factor (D)	0.9903
Reflectance factor	0.9750
Radiometer correction factor	1.00384

GAP ID	CB Device	Radiometer before (uW/cm^2)	Radiometer after (uW/cm^2)	Exposure Time (s)	UV Dose (mJ/cm^2)
37	D	123.2	123.6	172	20.06
38	C	122.0	122.2	345	39.98
39	A	128.7	126.7	491	59.51
40	B	126.5	126.3	669	79.95
41	D	122.3	123.5	865	100.49
42	C	120.0	122.2	1054	121.16
44	B	126.3	126.1	167	19.93
45	A	126.7	126.7	333	40.05
46	C	122.2	122.0	517	59.92
47	D	123.5	123.2	685	79.87
48	B	123.1	126.5	859	101.36
49	A	123.6	128.7	1023	122.49

Sample ID	409
Collection Date	15-Jan-19
CB Date	17-Jan-19
Stir bar volume cm^3	0.2333
Solution volume mL	17
Petri dish diameter cm	4.9750
Sample depth cm	0.8745
Distance from UV lamp to water surface cm	45.6
Divergence Factor (DF)	0.9812
Water absorption coefficient cm^{-1}	0.0214
Petri factor (A)	0.9971
Petri factor (B)	0.9915
Petri factor (C)	0.9946
Petri factor (D)	0.9898
Reflectance factor	0.9750
Radiometer correction factor	1.00442

GAP ID	CB Device	Radiometer before (uW/cm^2)	Radiometer after (uW/cm^2)	Exposure Time (s)	UV Dose (mJ/cm^2)
749	C	120.4	120.0	178	20.01
750	D	123.9	123.0	347	39.88
751	B	126.8	126.6	507	59.90
752	A	128.2	128.9	665	80.16
753	A	126.8	128.6	841	100.71
754	B	125.2	127.5	1028	121.12
756	A	128.9	128.2	165	19.89
757	B	126.6	126.7	339	40.04
758	D	123.0	121.6	524	59.66
759	C	120.0	119.8	713	79.97
760	D	123.5	124.5	870	100.43
761	C	121.1	121.1	1059	119.97

Table A.4b Collimated Beam UV Dose Calculations

Sample ID		416 T1UV
Collection Date		12-Mar-19
CB Date		13-Mar-19
Stir bar volume	cm^3	0.2333
Solution volume	mL	17
Petri dish diameter	cm	4.9750
Sample depth	cm	0.8745
Distance from UV lamp to water surface	cm	45.6
Divergence Factor (DF)		0.9812
Water absorption coefficient	cm^{-1}	0.0931
Petri factor (A)		0.9926
Petri factor (B)		0.9972
Petri factor (C)		0.9911
Petri factor (D)		0.9946
Reflectance factor		0.9750
Radiometer correction factor		1.00975

GAP ID	CB Device	Radiometer before (uW/cm^2)	Radiometer after (uW/cm^2)	Exposure Time (s)	UV Dose (mJ/cm^2)
2189	A	132.5	134.1	43	5.01
2190	B	133.6	133.2	85	9.96
2191	B	132.8	133.6	129	15.09
2192	A	131.9	133.7	173	20.09
2193	A	131.6	131.9	217	25.00
2194	B	128.9	132.3	265	30.40

2196	B	133.2	133.9	43	5.04
2197	A	134.1	133.9	85	9.96
2198	A	133.7	132.5	128	14.90
2199	B	130.6	132.8	174	20.13
2200	B	132.3	130.6	215	24.82
2201	A	130.2	131.6	264	30.21

Sample ID		407 MS2 (1 of 2)
Collection Date		13-Mar-19
CB Date		14-Mar-19
Stir bar volume	cm^3	0.2333
Solution volume	mL	17
Petri dish diameter	cm	4.9750
Sample depth	cm	0.8745
Distance from UV lamp to water surface	cm	45.6
Divergence Factor (DF)		0.9812
Water absorption coefficient	cm^{-1}	0.0136
Petri factor (A)		0.9926
Petri factor (B)		0.9972
Petri factor (C)		0.9911
Petri factor (D)		0.9946
Reflectance factor		0.9750
Radiometer correction factor		0.99877

GAP ID	CB Device	Radiometer before (uW/cm^2)	Radiometer after (uW/cm^2)	Exposure Time (s)	UV Dose (mJ/cm^2)
2305	D	131.3	131.2	162	19.93
2306	C	128.4	128.2	333	39.91
2307	D	131.2	131.2	528	64.94
2308	B	133.7	134.6	716	90.27
2309	A	135.4	135.3	948	120.03
2310	D	131.3	131.3	1219	150.04
2311	C	128.2	128.4	1461	175.10
2312	B	134.2	133.7	1586	199.66
2313	A	134.9	135.3	1783	225.36

Table A.4b Collimated Beam UV Dose Calculations

Sample ID		407 MS2 (2 of 2)
Collection Date		13-Mar-19
CB Date		14-Mar-19
Stir bar volume	cm^3	0.2333
Solution volume	mL	17
Petri dish diameter	cm	4.9750
Sample depth	cm	0.8745
Distance from UV lamp to water surface	cm	45.6
Divergence Factor (DF)		0.9812
Water absorption coefficient	cm^{-1}	0.0136
Petri factor (A)		0.9926
Petri factor (B)		0.9972
Petri factor (C)		0.9911
Petri factor (D)		0.9946
Reflectance factor		0.9750
Radiometer correction factor		1.00571

GAP ID	**CB Device**	**Radiometer before (uW/cm^2)**	**Radiometer after (uW/cm^2)**	**Exposure Time (s)**	**UV Dose (mJ/cm^2)**
2316	A	135.3	135.8	157	20.05
2317	A	135.8	135.6	313	40.01
2318	D	130.8	129.7	526	64.67
2319	C	128.8	128.6	743	89.95
2320	B	134.2	133.3	945	119.62
2321	A	135.6	133.6	1174	148.87
2322	B	133.6	134.2	1384	175.38
2323	C	128.4	128.8	1656	200.31
2324	D	130.8	130.8	1822	224.96

Sample ID		617
Collection Date		14-Mar-19
CB Date		18-Mar-19
Stir bar volume	cm^3	0.2333
Solution volume	mL	17
Petri dish diameter	cm	4.9750
Sample depth	cm	0.8745
Distance from UV lamp to water surface	cm	45.6
Divergence Factor (DF)		0.9812
Water absorption coefficient	cm^{-1}	0.0680
Petri factor (A)		0.9926
Petri factor (B)		0.9972
Petri factor (C)		0.9911
Petri factor (D)		0.9946
Reflectance factor		0.9750
Radiometer correction factor		1.00716

GAP ID	**CB Device**	**Radiometer before (uW/cm^2)**	**Radiometer after (uW/cm^2)**	**Exposure Time (s)**	**UV Dose (mJ/cm^2)**
2386	B	129.4	128.7	172	19.93
2387	A	131.2	130.9	341	39.94
2388	D	127.5	126.7	569	64.77
2389	C	125.1	123.6	806	89.45
2390	A	132.3	131.5	1015	119.66
2391	B	130.6	128.7	1279	148.89
2392	D	128.6	128.3	1563	179.81
2393	C	125.7	125.2	1872	209.58
2395	C	123.6	123.7	181	19.97
2396	D	126.7	126.1	353	39.96
2397	B	128.7	129.4	562	65.12
2398	A	131.5	131.2	766	89.93
2399	C	125.2	125.1	1074	119.95
2400	D	128.3	127.5	1305	149.48
2401	B	130.8	130.6	1533	179.91
2402	A	131.8	132.3	1783	210.45

Table A.4b Collimated Beam UV Dose Calculations

Sample ID		820 T1UV
Collection Date		19-Mar-19
CB Date		20-Mar-19
Stir bar volume	cm^3	0.2333
Solution volume	mL	17
Petri dish diameter	cm	4.9750
Sample depth	cm	0.8745
Distance from UV lamp to water surface	cm	45.6
Divergence Factor (DF)		0.9812
Water absorption coefficient	cm^{-1}	0.1900
Petri factor (A)		0.9926
Petri factor (B)		0.9972
Petri factor (C)		0.9911
Petri factor (D)		0.9946
Reflectance factor		0.9750
Radiometer correction factor		1.01166

GAP ID	**CB Device**	**Radiometer before (uW/cm^2)**	**Radiometer after (uW/cm^2)**	**Exposure Time (s)**	**UV Dose (mJ/cm^2)**
2838	D	127.5	128.0	49	5.01
2839	C	124.5	125.8	101	10.07
2840	B	133.5	131.9	140	14.90
2841	A	134.5	132.7	186	19.84
2842	D	129.6	128.4	241	24.87
2843	C	126.0	125.5	299	29.97

2845	B	131.5	131.3	47	4.95
2846	A	132.7	133.4	94	9.98
2847	C	125.5	124.9	150	14.97
2848	D	128.4	127.5	195	19.96
2849	B	132.1	133.4	236	25.12
2850	A	134.6	134.5	279	29.97

Sample ID		819 MS2 (1 of 2)
Collection Date		20-Mar-19
CB Date		22-Mar-19
Stir bar volume	cm^3	0.2333
Solution volume	mL	17
Petri dish diameter	cm	4.9750
Sample depth	cm	0.8745
Distance from UV lamp to water surface	cm	45.6
Divergence Factor (DF)		0.9812
Water absorption coefficient	cm^{-1}	0.1640
Petri factor (A)		0.9926
Petri factor (B)		0.9972
Petri factor (C)		0.9911
Petri factor (D)		0.9946
Reflectance factor		0.9750
Radiometer correction factor		1.01000

GAP ID	**CB Device**	**Radiometer before (uW/cm^2)**	**Radiometer after (uW/cm^2)**	**Exposure Time (s)**	**UV Dose (mJ/cm^2)**
2940	A	129.7	129.7	189	20.02
2941	B	127.6	127.5	382	39.98
2942	D	126.2	125.5	629	64.79
2943	C	123.5	122.7	894	89.75
2944	B	130.2	128.5	1123	119.19
2945	A	132.8	131.5	1383	149.29
2946	C	126.1	125.4	1702	174.55
2947	D	130.3	127.8	1875	198.04
2948	B	127.6	132.3	2149	229.15
2949	A	128.6	133.8	2380	255.06

Table A.4b Collimated Beam UV Dose Calculations

Sample ID		819 MS2 (2 of 2)
Collection Date		20-Mar-19
CB Date		22-Mar-19
Stir bar volume	cm^3	0.2333
Solution volume	mL	17
Petri dish diameter	cm	4.9750
Sample depth	cm	0.8745
Distance from UV lamp to water surface	cm	45.6
Divergence Factor (DF)		0.9812
Water absorption coefficient	cm^{-1}	0.1640
Petri factor (A)		0.9926
Petri factor (B)		0.9972
Petri factor (C)		0.9911
Petri factor (D)		0.9946
Reflectance factor		0.9750
Radiometer correction factor		1.01000

GAP ID	**CB Device**	**Radiometer before (uW/cm^2)**	**Radiometer after (uW/cm^2)**	**Exposure Time (s)**	**UV Dose (mJ/cm^2)**
2951	C	122.7	123.0	200	20.04
2952	D	125.5	126.2	389	40.07
2953	B	128.5	127.6	616	64.72
2954	A	131.5	129.7	838	89.40
2955	C	125.4	123.5	1173	119.06
2956	D	126.5	126.2	1449	149.84
2957	A	133.8	132.8	1601	174.32
2958	B	132.3	130.2	1842	198.38
2959	D	125.7	130.3	2187	229.11
2960	C	123.1	126.1	2490	253.03

Table A.4c Comparison of N_0 with UVDGM method

Date	Microbe	ID	Average	UVDGM	Difference
1/8/2019	MS2	101	7.073	7.054	-0.01922
1/16/2019	MS2	409	6.243	6.196	-0.04670
3/13/2019	MS2	407	8.372	8.228	-0.1441
3/14/2019	MS2	617	8.151	8.020	-0.1309
3/19/2019	MS2	819	8.179	8.062	-0.1168
3/12/2019	T1UV	416	7.989	7.986	-0.003724
3/19/2019	T1UV	820	7.916	7.900	-0.01566

Table A.4d Measured and Predicted UV Doses and Prediction Residuals from Collimated Beam Analyses

Date	Sample	Microbe	Measured UV Dose (mJ/cm^2)	Predicted UV Dose (mJ/cm^2)	Residuals (mJ/cm^2)
8-Jan-19	101	MS2	0.000	0.153	0.153
			20.064	19.330	-0.734
			39.985	39.457	-0.527
			59.512	60.488	0.977
			79.955	81.583	1.628
			100.493	102.258	1.765
			121.155	121.680	0.524
			0.000	-0.153	-0.153
			19.927	18.591	-1.336
			40.045	40.511	0.466
			59.919	59.790	-0.129
			79.872	78.977	-0.895
			101.363	100.100	-1.263
			122.487	120.912	-1.576
16-Jan-19	409	MS2	0.000	0.470	0.470
			20.010	21.252	1.242
			39.880	40.507	0.627
			59.900	61.246	1.346
			80.160	79.938	-0.222
			100.710	101.067	0.357
			121.120	121.848	0.728
			0.000	-0.466	-0.466
			19.890	18.357	-1.533
			40.040	39.509	-0.531
			59.660	59.075	-0.585
			79.970	79.407	-0.563
			100.430	99.915	-0.515
			119.970	119.452	-0.518
13-Mar-19	407	MS2	0.000	0.595	0.595
			19.932	21.360	1.428
			39.909	41.607	1.698
			64.939	65.733	0.793
			90.273	91.026	0.753
			120.028	121.042	1.014
			150.040	151.817	1.777
			199.665	204.258	4.594
			0.000	-0.590	-0.590
			20.049	20.187	0.139
			40.014	38.709	-1.305
			64.671	63.219	-1.452
			89.945	88.602	-1.343
			119.616	119.620	0.004
			148.867	147.915	-0.952
			175.380	172.760	-2.619
			200.314	196.733	-3.582
			224.958	224.970	0.011

Table A.4d Measured and Predicted UV Doses and Prediction Residuals from Collimated Beam Analyses

Date	Sample	Microbe	Measured UV Dose (mJ/cm^2)	Predicted UV Dose (mJ/cm^2)	Residuals (mJ/cm^2)
14-Mar-19	617	MS2	0.000	0.645	0.645
			19.930	21.043	1.112
			39.943	42.912	2.968
			64.770	66.991	2.221
			89.446	90.813	1.367
			119.664	119.334	-0.331
			148.893	150.352	1.459
			179.808	185.650	5.842
			209.583	208.220	-1.363
			0.000	-0.639	-0.639
			19.973	19.672	-0.302
			39.961	38.557	-1.404
			65.122	63.619	-1.503
			89.932	89.503	-0.429
			119.954	116.644	-3.310
			149.485	146.010	-3.474
			179.907	178.697	-1.210
			210.448	209.964	-0.484
19-Mar-19	819	MS2	0.000	0.511	0.511
			20.023	18.208	-1.815
			39.981	37.716	-2.265
			64.788	62.535	-2.253
			89.753	90.827	1.073
			119.194	119.073	-0.121
			149.286	155.070	5.784
			174.551	184.189	9.638
			229.150	229.515	0.365
			255.059	245.778	-9.281
			0.000	-0.505	-0.505
			20.038	18.295	-1.744
			40.068	37.959	-2.109
			64.724	61.293	-3.432
			89.396	87.032	-2.364
			119.055	118.593	-0.462
			149.842	150.874	1.032
			174.322	174.211	-0.111
			198.379	200.383	2.003
			229.113	233.323	4.210
			253.030	248.045	-4.985
12-Mar-19	416	T1UV	0.000	0.067	0.067
			5.012	5.317	0.305
			9.959	9.772	-0.187
			15.092	14.473	-0.619
			20.087	20.753	0.666
			24.997	25.347	0.350
			30.398	29.601	-0.797
			0.000	-0.067	-0.067
			5.044	5.287	0.243
			9.959	9.697	-0.261
			14.896	14.496	-0.400
			20.128	20.240	0.113
			24.823	25.476	0.653
			30.215	30.155	-0.060

Table A.4d Measured and Predicted UV Doses and Prediction Residuals from Collimated Beam Analyses

Date	Sample	Microbe	Measured UV Dose (mJ/cm^2)	Predicted UV Dose (mJ/cm^2)	Residuals (mJ/cm^2)
19-Mar-19	820	T1UV	0.000	0.227	0.227
			5.007	5.593	0.586
			10.075	10.605	0.530
			14.898	14.278	-0.619
			19.837	20.182	0.346
			24.867	25.547	0.681
			29.968	28.925	-1.042
			0.000	-0.227	-0.227
			4.952	5.355	0.402
			9.984	9.996	0.012
			14.968	14.959	-0.009
			19.957	20.045	0.088
			25.123	25.191	0.068

Table A.5a Biodosimetry Test Results WF-115-4

ID	In 1			In 2			In 3			Out 1			Out 2			Out 3			$\log_{10,in}$	$\log_{10,out}$	log *i*
	Dilution (log)	Aliquot (mL)	PFU	Dilution (log)	Aliquot (mL)	PFU	Dilution (log)	Aliquot (mL)	PFU	Dilution (log)	Aliquot (mL)	PFU	Dilution (log)	Aliquot (mL)	PFU	Dilution (log)	Aliquot (mL)	PFU			
401	-4	0.5	139	-4	0.5	102	-4	0.5	107	-1	1	78	-1	1	105	-1	1	90	6.365	2.959	3.406
401	-4	0.5	115	-4	0.5	106	-4	0.5	121	-1	1	110	-1	1	111	-1	1	94	6.358	3.021	3.337
401	-4	0.5	154	-4	0.5	108	-4	0.5	115	-1	1	80	-1	1	96	-1	1	95	6.400	2.956	3.444
402	-3	1	154	-3	1	139	-3	1	155	-1	1	120	-1	1	167	-1	1	130	5.174	3.143	2.031
402	-3	1	149	-3	1	146	-3	1	163	-1	1	193	-1	1	140	-1	1	145	5.184	3.202	1.981
402	-3	1	151	-3	1	133	-3	1	135	-1	1	132	-1	1	110	-1	1	143	5.145	3.108	2.037
403	-3	0.5	107	-3	0.5	94	-3	0.5	102	0	1	81	0	1	77	0	1	87	5.305	1.912	3.393
403	-3	0.5	109	-3	0.5	72	-3	0.5	134	0	1	85	0	1	85	0	1	73	5.322	1.908	3.414
403	-3	0.5	112	-3	0.5	114	-3	0.5	116	0	1	89	0	1	65	0	1	83	5.358	1.898	3.460
404	-3	2	104	-3	2	105	-3	2	81	-2	2	65	-2	2	72	-2	2	64	4.684	3.525	1.159
404	-3	2	91	-3	2	82	-3	2	107	-2	2	75	-2	2	61	-2	2	83	4.669	3.562	1.107
404	-3	2	84	-3	2	84	-3	2	79	-2	2	62	-2	2	67	-2	2	65	4.615	3.510	1.105
409	-4	1	142	-4	1	148	-4	1	143	0	0.5	122	0	0.5	141	0	0.5	138	6.159	2.427	3.732
409	-4	1	133	-4	1	147	-4	1	154	0	0.5	166	0	0.5	137	0	0.5	136	6.160	2.466	3.694
409	-4	1	148	-4	1	144	-4	1	139	0	0.5	150	0	0.5	130	0	0.5	173	6.157	2.480	3.677
422	-2	0.5	84	-2	0.5	84	-2	0.5	71	-1	1	145	-1	1	129	-1	1	144	4.202	3.144	1.058
422	-2	0.5	75	-2	0.5	81	-2	0.5	63	-1	1	142	-1	1	137	-1	1	123	4.164	3.127	1.037
422	-2	0.5	79	-2	0.5	69	-2	0.5	104	-1	1	121	-1	1	127	-1	1	137	4.225	3.108	1.117
408	-2	1	72	-2	1	73	-2	1	59	-1	1	72	-1	1	89	-1	1	80	3.833	2.905	0.9276
408	-2	1	57	-2	1	65	-2	1	62	-1	1	104	-1	1	94	-1	1	97	3.788	2.993	0.7950
408	-2	1	80	-2	1	87	-2	1	61	-1	1	109	-1	1	92	-1	1	105	3.881	3.009	0.8722
413	-3	2	85	-3	2	41	-3	2	77	0	0.5	75	0	0.5	87	0	0.5	80	4.529	2.208	2.322
413	-3	2	94	-3	2	99	-3	2	83	0	0.5	86	0	0.5	93	0	0.5	102	4.663	2.273	2.390
413	-3	2	121	-3	2	83	-3	2	86	0	0.5	95	0	0.5	91	0	0.5	123	4.684	2.314	2.370
407	-6	2	138	-6	2	118	-6	2	103	0	0.5	90	0	0.5	78	0	0.5	75	7.777	2.210	5.567
407	-6	2	161	-6	2	117	-6	2	135	0	0.5	92	0	0.5	66	0	0.5	97	7.838	2.230	5.607
407	-6	2	125	-6	2	123	-6	2	115	0	0.5	99	0	0.5	62	0	0.5	76	7.782	2.199	5.583
417	-5	1	100	-5	1	103	-5	1	96	0	10	50	0	10	55	0	10	59	6.999	0.7377	6.261
417	-5	1	92	-5	1	108	-5	1	91	0	10	61	0	10	65	0	10	48	6.987	0.7634	6.223
417	-5	1	108	-5	1	85	-5	1	90	0	10	57	0	10	68	0	10	74	6.975	0.8217	6.153
421	-4	2	203	-4	2	158	-4	2	191	0	1	92	0	1	95	0	1	93	5.964	1.970	3.994
421	-4	2	192	-4	2	205	-4	2	152	0	1	110	0	1	78	0	1	91	5.961	1.968	3.993
421	-4	2	113	-4	2	170	-4	2	124	0	1	81	0	1	79	0	1	98	5.831	1.934	3.897
412	-5	1	88	-5	1	74	-5	1	92	0	2	112	0	2	91	0	2	112	6.928	1.720	5.208
412	-5	1	101	-5	1	113	-5	1	82	0	2	99	0	2	104	0	2	121	6.994	1.732	5.262
412	-5	1	103	-5	1	121	-5	1	109	0	2	102	0	2	88	0	2	90	7.045	1.669	5.376
415	-4	0.5	112	-4	0.5	80	-4	0.5	126	-1	2	108	-1	2	107	-1	2	100	6.326	2.720	3.606
415	-4	0.5	126	-4	0.5	110	-4	0.5	103	-1	2	132	-1	2	132	-1	2	113	6.354	2.798	3.556

Table A.5a Biodosimetry Test Results WF-115-4

ID	In 1			In 2			In 3			Out 1			Out 2			Out 3			$\log_{10,in}$	$\log_{10,out}$	log *i*
	Dilution (log)	Aliquot (mL)	PFU	Dilution (log)	Aliquot (mL)	PFU	Dilution (log)	Aliquot (mL)	PFU	Dilution (log)	Aliquot (mL)	PFU	Dilution (log)	Aliquot (mL)	PFU	Dilution (log)	Aliquot (mL)	PFU			
415	-4	0.5	120	-4	0.5	139	-4	0.5	130	-1	2	107	-1	2	125	-1	2	85	6.414	2.723	3.691
405	-2	1	72	-2	1	47	-2	1	65	0	1	89	0	1	93	0	1	103	3.788	1.978	1.810
405	-2	1	56	-2	1	65	-2	1	50	0	1	86	0	1	94	0	1	76	3.756	1.931	1.825
405	-2	1	61	-2	1	65	-2	1	64	0	1	94	0	1	88	0	1	59	3.802	1.905	1.897
406	-3	1	115	-3	1	87	-3	1	110	0	10	30	0	10	31	0	10	26	5.017	0.4624	4.555
406	-3	1	102	-3	1	93	-3	1	85	0	10	28	0	10	25	0	10	22	4.970	0.3979	4.572
406	-3	1	116	-3	1	125	-3	1	117	0	10	38	0	10	42	0	10	43	5.077	0.6128	4.464
410	-3	2	48	-3	2	41	-3	2	56	0	0.5	101	0	0.5	89	0	0.5	101	4.383	2.288	2.095
410	-3	2	57	-3	2	57	-3	2	47	0	0.5	110	0	0.5	116	0	0.5	104	4.429	2.342	2.086
410	-3	2	35	-3	2	42	-3	2	47	0	0.5	121	0	0.5	125	0	0.5	136	4.315	2.406	1.909
411	-4	2	86	-4	2	73	-4	2	60	0	1	56	0	1	72	0	1	70	5.562	1.820	3.743
411	-4	2	96	-4	2	76	-4	2	72	0	1	52	0	1	80	0	1	46	5.609	1.773	3.836
411	-4	2	65	-4	2	78	-4	2	64	0	1	62	0	1	83	0	1	53	5.538	1.820	3.718
414	-1	0.5	81	-1	0.5	88	-1	0.5	74	0	1	166	0	1	162	0	1	189	3.210	2.236	0.9731
414	-1	0.5	67	-1	0.5	77	-1	0.5	83	0	1	119	0	1	149	0	1	163	3.180	2.157	1.023
414	-1	0.5	73	-1	0.5	82	-1	0.5	80	0	1	120	0	1	145	0	1	120	3.195	2.108	1.087
416	-4	2	109	-4	2	110	-4	2	90	0	10	34	0	10	51	0	10	38	5.712	0.6128	5.099
416	-4	2	127	-4	2	124	-4	2	100	0	10	54	0	10	58	0	10	54	5.767	0.7430	5.024
416	-4	2	95	-4	2	112	-4	2	110	0	10	58	0	10	59	0	10	66	5.723	0.7853	4.938
419	-2	1	86	-2	1	84	-2	1	84	0	2	54	0	2	49	0	2	54	3.928	1.418	2.510
419	-2	1	76	-2	1	60	-2	1	50	0	2	61	0	2	54	0	2	39	3.792	1.409	2.383
419	-2	1	88	-2	1	101	-2	1	85	0	2	67	0	2	60	0	2	63	3.961	1.501	2.460
420	-3	2	85	-3	2	86	-3	2	72	0	2	36	0	2	41	0	2	44	4.607	1.305	3.303
420	-3	2	106	-3	2	91	-3	2	75	0	2	41	0	2	34	0	2	47	4.656	1.308	3.348
420	-3	2	83	-3	2	79	-3	2	71	0	2	39	0	2	33	0	2	38	4.589	1.263	3.326
423	-1	0.5	83	-1	0.5	95	-1	0.5	109	0	2	113	0	2	107	0	2	108	3.282	1.738	1.544
423	-1	0.5	85	-1	0.5	108	-1	0.5	118	0	2	101	0	2	120	0	2	98	3.317	1.726	1.591
423	-1	0.5	83	-1	0.5	96	-1	0.5	120	0	2	67	0	2	82	0	2	89	3.300	1.598	1.701
Control	-1	0.5	55	-1	0.5	79	-1	0.5	62	-1	0.5	99	-1	0.5	116	-1	0.5	88	3.116	3.305	-0.189
Control	-1	0.5	72	-1	0.5	92	-1	0.5	79	-1	0.5	94	-1	0.5	109	-1	0.5	105	3.210	3.312	-0.103
Control	-1	0.5	87	-1	0.5	69	-1	0.5	68	-1	0.5	95	-1	0.5	101	-1	0.5	101	3.174	3.297	-0.123
Control 4	-2	2	131	-2	2	110	-2	2	121	-2	2	106	-2	2	94	-2	2	115	3.781	3.720	0.060
Control 4	-2	2	95	-2	2	117	-2	2	127	-2	2	130	-2	2	106	-2	2	112	3.752	3.763	-0.011
Control 4	-2	2	123	-2	2	129	-2	2	106	-2	2	105	-2	2	115	-2	2	117	3.776	3.749	0.026
Control 5	-3	0.5	78	-3	0.5	88	-3	0.5	99	-3	0.5	106	-3	0.5	76	-3	0.5	92	5.247	5.262	-0.015
Control 5	-3	0.5	76	-3	0.5	75	-3	0.5	81	-3	0.5	79	-3	0.5	75	-3	0.5	67	5.189	5.168	0.021
Control 5	-3	0.5	89	-3	0.5	86	-3	0.5	88	-3	0.5	66	-3	0.5	62	-3	0.5	88	5.244	5.158	0.086
Control 1	-3	2	130	-3	2	155	-3	2	153	-3	2	120	-3	2	130	-3	2	132	4.863	4.804	0.059
Control 1	-3	2	157	-3	2	131	-3	2	173	-3	2	136	-3	2	167	-3	2	137	4.886	4.865	0.020
Control 1	-3	2	100	-3	2	117	-3	2	113	-3	2	163	-3	2	176	-3	2	161	4.740	4.921	-0.180

Table A.5b Biodosimetry Test Results WF-125-6

ID	In 1			In 2			In 3			Out 1			Out 2			Out 3			$\log_{10,in}$	$\log_{10,out}$	log *i*
	Dilution (log)	Aliquot (mL)	PFU	Dilution (log)	Aliquot (mL)	PFU	Dilution (log)	Aliquot (mL)	PFU	Dilution (log)	Aliquot (mL)	PFU	Dilution (log)	Aliquot (mL)	PFU	Dilution (log)	Aliquot (mL)	PFU			
601	-4	0.5	186	-4	0.5	148	-4	0.5	159	-1	1	63	-1	1	60	-1	1	50	6.517	2.761	3.756
601	-4	0.5	168	-4	0.5	149	-4	0.5	146	-1	1	70	-1	1	64	-1	1	56	6.489	2.802	3.688
601	-4	0.5	176	-4	0.5	117	-4	0.5	165	-1	1	63	-1	1	71	-1	1	78	6.485	2.849	3.636
602	-3	1	103	-3	1	129	-3	1	111	-1	0.5	93	-1	0.5	81	-1	0.5	75	5.058	3.220	1.838
602	-3	1	114	-3	1	126	-3	1	123	-1	0.5	120	-1	0.5	88	-1	0.5	93	5.083	3.302	1.780
602	-3	1	132	-3	1	91	-3	1	105	-1	0.5	111	-1	0.5	79	-1	0.5	99	5.039	3.285	1.754
604	-3	2	112	-3	2	109	-3	2	103	-1	0.5	134	-1	0.5	122	-1	0.5	178	4.732	3.461	1.271
604	-3	2	102	-3	2	115	-3	2	102	-1	0.5	113	-1	0.5	121	-1	0.5	105	4.726	3.354	1.372
604	-3	2	112	-3	2	83	-3	2	116	-1	0.5	111	-1	0.5	139	-1	0.5	111	4.715	3.381	1.333
603	-3	1	135	-3	1	137	-3	1	125	0	0.5	65	0	0.5	68	0	0.5	84	5.122	2.160	2.961
603	-3	1	114	-3	1	126	-3	1	122	0	0.5	84	0	0.5	74	0	0.5	62	5.082	2.166	2.915
603	-3	1	151	-3	1	159	-3	1	123	0	0.5	61	0	0.5	76	0	0.5	89	5.159	2.178	2.981
623	-3	1	99	-3	1	125	-3	1	90	-2	0.5	81	-2	0.5	80	-2	0.5	89	5.020	4.222	0.798
623	-3	1	108	-3	1	124	-3	1	135	-2	0.5	79	-2	0.5	81	-2	0.5	84	5.088	4.211	0.876
623	-3	1	129	-3	1	118	-3	1	123	-2	0.5	84	-2	0.5	85	-2	0.5	91	5.091	4.239	0.852
608	-3	1	119	-3	1	121	-3	1	106	-2	0.5	101	-2	0.5	91	-2	0.5	115	5.062	4.311	0.751
608	-3	1	111	-3	1	142	-3	1	135	-2	0.5	96	-2	0.5	102	-2	0.5	117	5.112	4.322	0.789
608	-3	1	126	-3	1	115	-3	1	132	-2	0.5	117	-2	0.5	110	-2	0.5	102	5.095	4.341	0.753
606	-5	1	145	-5	1	119	-5	1	122	0	5	20	0	5	27	0	5	30	7.109	0.7104	6.399
606	-5	1	114	-5	1	110	-5	1	144	0	5	15	0	5	26	0	5	25	7.089	0.6435	6.445
606	-5	1	147	-5	1	108	-5	1	100	0	5	35	0	5	21	0	5	22	7.073	0.7160	6.357
609	-4	1	66	-4	1	70	-4	1	61	-1	2	70	-1	2	65	-1	2	50	5.817	2.489	3.328
609	-4	1	60	-4	1	65	-4	1	75	-1	2	82	-1	2	70	-1	2	83	5.824	2.593	3.231
609	-4	1	56	-4	1	67	-4	1	60	-1	2	77	-1	2	70	-1	2	71	5.785	2.560	3.225
612	-5	1	114	-5	1	105	-5	1	98	0	2	61	0	2	42	0	2	57	7.024	1.426	5.598
612	-5	1	90	-5	1	103	-5	1	103	0	2	45	0	2	63	0	2	47	6.994	1.412	5.582
612	-5	1	122	-5	1	109	-5	1	103	0	2	38	0	2	54	0	2	44	7.047	1.355	5.691
613	-3	2	109	-3	2	97	-3	2	100	-1	2	106	-1	2	114	-1	2	123	4.708	2.757	1.950
613	-3	2	100	-3	2	83	-3	2	96	-1	2	110	-1	2	140	-1	2	103	4.667	2.770	1.898
613	-3	2	90	-3	2	98	-3	2	115	-1	2	120	-1	2	114	-1	2	111	4.703	2.760	1.944
617	-5	1	99	-5	1	98	-5	1	106	0	2	81	0	2	77	0	2	72	7.004	1.584	5.421
617	-5	1	82	-5	1	95	-5	1	87	0	2	74	0	2	81	0	2	87	6.944	1.606	5.339
617	-5	1	104	-5	1	88	-5	1	101	0	2	60	0	2	74	0	2	51	6.990	1.489	5.501
615	-4	1	86	-4	1	103	-4	1	93	-1	1	64	-1	1	66	-1	1	53	5.973	2.785	3.188
615	-4	1	93	-4	1	83	-4	1	73	-1	1	55	-1	1	65	-1	1	71	5.919	2.804	3.115
615	-4	1	84	-4	1	93	-4	1	90	-1	1	58	-1	1	46	-1	1	41	5.949	2.684	3.265
605	-3	2	63	-3	2	84	-3	2	49	0	2	60	0	2	76	0	2	64	4.514	1.523	2.991
605	-3	2	64	-3	2	75	-3	2	60	0	2	61	0	2	66	0	2	74	4.521	1.525	2.996
605	-3	2	61	-3	2	57	-3	2	64	0	2	73	0	2	72	0	2	72	4.482	1.558	2.924
610	-2	0.5	77	-2	0.5	75	-2	0.5	76	0	0.5	103	0	0.5	87	0	0.5	131	4.182	2.330	1.851

Table A.5b **Biodosimetry Test Results WF-125-6**

ID	In 1			In 2			In 3			Out 1			Out 2			Out 3			$\log_{10,in}$	$\log_{10,out}$	log *i*
	Dilution (log)	Aliquot (mL)	PFU	Dilution (log)	Aliquot (mL)	PFU	Dilution (log)	Aliquot (mL)	PFU	Dilution (log)	Aliquot (mL)	PFU	Dilution (log)	Aliquot (mL)	PFU	Dilution (log)	Aliquot (mL)	PFU			
610	-2	0.5	76	-2	0.5	89	-2	0.5	87	0	0.5	123	0	0.5	108	0	0.5	125	4.225	2.375	1.850
610	-2	0.5	95	-2	0.5	87	-2	0.5	80	0	0.5	99	0	0.5	108	0	0.5	97	4.242	2.307	1.935
611	-3	0.5	118	-3	0.5	135	-3	0.5	105	0	2	53	0	2	50	0	2	44	5.378	1.389	3.989
611	-3	0.5	124	-3	0.5	131	-3	0.5	125	0	2	40	0	2	46	0	2	27	5.404	1.275	4.129
611	-3	0.5	98	-3	0.5	121	-3	0.5	116	0	2	31	0	2	46	0	2	38	5.349	1.283	4.066
614	-1	1	125	-1	1	103	-1	1	110	0	1	135	0	1	128	0	1	146	3.052	2.135	0.917
614	-1	1	102	-1	1	108	-1	1	97	0	1	140	0	1	108	0	1	131	3.010	2.102	0.908
614	-1	1	110	-1	1	88	-1	1	101	0	1	113	0	1	106	0	1	142	2.999	2.080	0.918
616	-4	2	91	-4	2	85	-4	2	76	0	2	106	0	2	81	0	2	90	5.623	1.664	3.959
616	-4	2	90	-4	2	89	-4	2	82	0	2	76	0	2	61	0	2	57	5.638	1.510	4.129
616	-4	2	104	-4	2	71	-4	2	87	0	2	94	0	2	87	0	2	81	5.640	1.640	4.000
619	-2	0.5	92	-2	0.5	95	-2	0.5	91	0	1	142	0	1	136	0	1	113	4.268	2.115	2.153
619	-2	0.5	106	-2	0.5	77	-2	0.5	89	0	1	134	0	1	141	0	1	127	4.258	2.127	2.131
619	-2	0.5	82	-2	0.5	87	-2	0.5	97	0	1	135	0	1	126	0	1	136	4.249	2.122	2.127
620	-4	2	60	-4	2	41	-4	2	54	0	0.5	104	0	0.5	87	0	0.5	68	5.412	2.237	3.175
620	-4	2	71	-4	2	65	-4	2	69	0	0.5	69	0	0.5	82	0	0.5	74	5.534	2.176	3.358
620	-4	2	82	-4	2	63	-4	2	60	0	0.5	101	0	0.5	101	0	0.5	90	5.534	2.289	3.244
621	-4	2	64	-4	2	68	-4	2	66	0	2	36	0	2	24	0	2	29	5.519	1.171	4.347
621	-4	2	52	-4	2	54	-4	2	64	0	2	23	0	2	26	0	2	21	5.452	1.067	4.385
621	-4	2	58	-4	2	61	-4	2	60	0	2	26	0	2	18	0	2	27	5.475	1.073	4.402
622	-1	0.5	133	-1	0.5	152	-1	0.5	140	0	0.5	97	0	0.5	109	0	0.5	115	3.452	2.330	1.122
622	-1	0.5	89	-1	0.5	115	-1	0.5	86	0	0.5	72	0	0.5	61	0	0.5	72	3.286	2.136	1.151
622	-1	0.5	69	-1	0.5	79	-1	0.5	100	0	0.5	62	0	0.5	51	0	0.5	57	3.218	2.054	1.164
Control	-1	0.5	55	-1	0.5	79	-1	0.5	62	-1	0.5	99	-1	0.5	116	-1	0.5	88	3.116	3.305	-0.189
Control	-1	0.5	72	-1	0.5	92	-1	0.5	79	-1	0.5	94	-1	0.5	109	-1	0.5	105	3.210	3.312	-0.103
Control	-1	0.5	87	-1	0.5	69	-1	0.5	68	-1	0.5	95	-1	0.5	101	-1	0.5	101	3.174	3.297	-0.123
Control 4	-2	2	131	-2	2	110	-2	2	121	-2	2	106	-2	2	94	-2	2	115	3.781	3.720	0.060
Control 4	-2	2	95	-2	2	117	-2	2	127	-2	2	130	-2	2	106	-2	2	112	3.752	3.763	-0.011
Control 4	-2	2	123	-2	2	129	-2	2	106	-2	2	105	-2	2	115	-2	2	117	3.776	3.749	0.026
Control 1	-3	2	130	-3	2	155	-3	2	153	-3	2	120	-3	2	130	-3	2	132	4.863	4.804	0.059
Control 1	-3	2	157	-3	2	131	-3	2	173	-3	2	136	-3	2	167	-3	2	137	4.886	4.865	0.020
Control 1	-3	2	100	-3	2	117	-3	2	113	-3	2	163	-3	2	176	-3	2	161	4.740	4.921	-0.180
Control 6	-2	0.5	76	-2	0.5	91	-2	0.5	60	-2	0.5	80	-2	0.5	86	-2	0.5	60	4.180	4.178	0.002
Control 6	-2	0.5	75	-2	0.5	79	-2	0.5	76	-2	0.5	70	-2	0.5	95	-2	0.5	65	4.186	4.186	0.000
Control 6	-2	0.5	68	-2	0.5	89	-2	0.5	82	-2	0.5	85	-2	0.5	67	-2	0.5	60	4.202	4.150	0.052
607	-4	2	120	-4	2	118	-4	2	95	0	2	90	0	2	94	0	2	104	5.744	1.681	4.063
607	-4	2	132	-4	2	143	-4	2	139	0	2	98	0	2	120	0	2	111	5.839	1.739	4.100
607	-4	2	115	-4	2	130	-4	2	124	0	2	69	0	2	86	0	2	86	5.789	1.604	4.185

Table A.5c Biodosimetry Test Results WF-225-8

ID	In 1			In 2			In 3			Out 1			Out 2			Out 3			$\log_{10,in}$	$\log_{10,out}$	log *i*
	Dilution (log)	Aliquot (mL)	PFU	Dilution (log)	Aliquot (mL)	PFU	Dilution (log)	Aliquot (mL)	PFU	Dilution (log)	Aliquot (mL)	PFU	Dilution (log)	Aliquot (mL)	PFU	Dilution (log)	Aliquot (mL)	PFU			
801	-4	0.5	103	-4	0.5	89	-4	0.5	125	-2	2	43	-2	2	54	-2	2	61	6.325	3.421	2.904
801	-4	0.5	90	-4	0.5	68	-4	0.5	126	-2	2	42	-2	2	50	-2	2	51	6.277	3.377	2.900
801	-4	0.5	71	-4	0.5	60	-4	0.5	88	-2	2	61	-2	2	34	-2	2	58	6.164	3.407	2.758
802	-3	1	61	-3	1	59	-3	1	62	-1	2	135	-1	2	130	-1	2	126	4.783	2.814	1.969
802	-3	1	76	-3	1	87	-3	1	44	-1	2	126	-1	2	147	-1	2	106	4.839	2.800	2.038
802	-3	1	70	-3	1	73	-3	1	83	-1	2	118	-1	2	127	-1	2	123	4.877	2.788	2.089
803	-4	2	115	-4	2	93	-4	2	79	0	10	96	0	10	96	0	10	119	5.680	1.016	4.664
803	-4	2	87	-4	2	90	-4	2	121	0	10	104	0	10	98	0	10	92	5.696	0.9912	4.705
803	-4	2	95	-4	2	107	-4	2	109	0	10	91	0	10	88	0	10	93	5.715	0.9574	4.757
804	-3	2	94	-3	2	80	-3	2	80	-1	0.5	77	-1	0.5	107	-1	0.5	98	4.627	3.274	1.353
804	-3	2	86	-3	2	75	-3	2	91	-1	0.5	108	-1	0.5	91	-1	0.5	86	4.623	3.279	1.344
804	-3	2	89	-3	2	78	-3	2	54	-1	0.5	76	-1	0.5	81	-1	0.5	89	4.566	3.215	1.351
819	-3	2	74	-3	2	71	-3	2	76	0	1	104	0	1	89	0	1	93	4.566	1.979	2.587
819	-3	2	81	-3	2	80	-3	2	57	0	1	124	0	1	104	0	1	103	4.560	2.043	2.518
819	-3	2	51	-3	2	48	-3	2	60	0	1	107	0	1	100	0	1	80	4.423	1.981	2.442
816	-4	1	90	-4	1	53	-4	1	49	-1	2	68	-1	2	83	-1	2	82	5.806	2.589	3.217
816	-4	1	78	-4	1	76	-4	1	69	-1	2	106	-1	2	91	-1	2	93	5.871	2.684	3.187
816	-4	1	71	-4	1	60	-4	1	91	-1	2	91	-1	2	99	-1	2	91	5.869	2.671	3.199
808	-2	0.5	100	-2	0.5	83	-2	0.5	92	-2	2	70	-2	2	67	-2	2	49	4.263	3.491	0.772
808	-2	0.5	141	-2	0.5	117	-2	0.5	126	-2	2	110	-2	2	100	-2	2	132	4.408	3.756	0.652
808	-2	0.5	134	-2	0.5	121	-2	0.5	134	-2	2	139	-2	2	109	-2	2	105	4.414	3.770	0.644
809	-2	1	150	-2	1	138	-2	1	177	-1	0.5	274	-1	0.5	250	-1	0.5	216	4.190	3.693	0.497
809	-2	1	209	-2	1	154	-2	1	162	-1	0.5	230	-1	0.5	239	-1	0.5	234	4.243	3.671	0.572
809	-2	1	153	-2	1	159	-2	1	180	-1	0.5	244	-1	0.5	197	-1	0.5	249	4.215	3.663	0.552
814	-3	1	85	-3	1	56	-3	1	68	-2	0.5	155	-2	0.5	145	-2	0.5	196	4.843	4.519	0.324
814	-3	1	91	-3	1	78	-3	1	75	-2	0.5	137	-2	0.5	154	-2	0.5	183	4.910	4.500	0.411
814	-3	1	81	-3	1	84	-3	1	68	-2	0.5	162	-2	0.5	189	-2	0.5	162	4.890	4.534	0.356
818	-5	0.5	110	-5	0.5	103	-5	0.5	126	0	10	35	0	10	33	0	10	31	7.354	0.5185	6.836
818	-5	0.5	111	-5	0.5	145	-5	0.5	107	0	10	56	0	10	55	0	10	45	7.384	0.7160	6.668
818	-5	0.5	125	-5	0.5	110	-5	0.5	111	0	10	33	0	10	33	0	10	22	7.363	0.4674	6.896
813	-5	1	80	-5	1	83	-5	1	91	0	50	30	0	50	39	0	50	40	6.928	-0.1387	7.066
810	-4	0.5	109	-4	0.5	107	-4	0.5	128	-1	2	70	-1	2	56	-1	2	72	6.360	2.519	3.842
810	-4	0.5	114	-4	0.5	104	-4	0.5	102	-1	2	82	-1	2	75	-1	2	82	6.329	2.600	3.729
810	-4	0.5	113	-4	0.5	110	-4	0.5	103	-1	2	66	-1	2	83	-1	2	69	6.337	2.560	3.777
820	-4	0.5	100	-4	0.5	102	-4	0.5	75	0	20	29	0	20	38	0	20	41	6.266	0.2553	6.011
820	-4	0.5	92	-4	0.5	88	-4	0.5	135	0	20	38	0	20	38	0	20	37	6.322	0.2749	6.047
820	-4	0.5	91	-4	0.5	86	-4	0.5	105	0	20	41	0	20	36	0	20	43	6.274	0.3010	5.973
817	-4	1	85	-4	1	98	-4	1	103	0	10	76	0	10	67	0	10	53	5.979	0.8151	5.164
817	-4	1	82	-4	1	89	-4	1	104	0	10	60	0	10	61	0	10	50	5.962	0.7559	5.206
817	-4	1	98	-4	1	64	-4	1	84	0	10	64	0	10	61	0	10	45	5.914	0.7533	5.160

Table A.5c Biodosimetry Test Results WF-225-8

ID	In 1			In 2			In 3			Out 1			Out 2			Out 3			$\log_{10,in}$	$\log_{10,out}$	log *i*
	Dilution (log)	Aliquot (mL)	PFU	Dilution (log)	Aliquot (mL)	PFU	Dilution (log)	Aliquot (mL)	PFU	Dilution (log)	Aliquot (mL)	PFU	Dilution (log)	Aliquot (mL)	PFU	Dilution (log)	Aliquot (mL)	PFU			
821	-3	0.5	70	-3	0.5	96	-3	0.5	78	0	2	44	0	2	60	0	2	40	5.211	1.380	3.831
821	-3	0.5	57	-3	0.5	69	-3	0.5	70	0	2	50	0	2	42	0	2	36	5.116	1.329	3.787
821	-3	0.5	89	-3	0.5	86	-3	0.5	72	0	2	47	0	2	61	0	2	50	5.217	1.421	3.796
812	-4	2	61	-4	2	52	-4	2	58	0	50	23	0	50	26	0	50	14	5.455	-0.3768	5.832
812	-4	2	73	-4	2	46	-4	2	51	0	50	24	0	50	21	0	50	12	5.452	-0.4202	5.873
812	-4	2	70	-4	2	56	-4	2	78	0	50	9	0	50	19	0	50	9	5.531	-0.6079	6.139
811	-3	2	51	-3	2	42	-3	2	51	0	0.5	94	0	0.5	128	0	0.5	100	4.380	2.332	2.048
811	-3	2	48	-3	2	36	-3	2	51	0	0.5	88	0	0.5	100	0	0.5	96	4.352	2.277	2.075
811	-3	2	48	-3	2	34	-3	2	57	0	0.5	113	0	0.5	97	0	0.5	101	4.365	2.317	2.048
805	-4	2	52	-4	2	43	-4	2	45	0	10	4	0	10	3	0	10	5	5.368	-0.3979	5.766
805	-4	2	46	-4	2	47	-4	2	61	0	10	3	0	10	5	0	10	1	5.409	-0.5229	5.932
805	-4	2	59	-4	2	39	-4	2	48	0	10	7	0	10	11	0	10	5	5.386	-0.1154	5.502
815	-2	0.5	113	-2	0.5	131	-2	0.5	161	-1	2	157	-1	2	137	-1	2	139	4.431	2.858	1.573
815	-2	0.5	118	-2	0.5	118	-2	0.5	114	-1	2	139	-1	2	135	-1	2	149	4.368	2.848	1.520
815	-2	0.5	107	-2	0.5	120	-2	0.5	115	-1	2	111	-1	2	106	-1	2	112	4.358	2.739	1.619
822	-2	1	99	-2	1	109	-2	1	84	-1	2	83	-1	2	82	-1	2	63	3.988	2.580	1.408
822	-2	1	86	-2	1	85	-2	1	94	-1	2	88	-1	2	96	-1	2	107	3.946	2.686	1.260
822	-2	1	92	-2	1	70	-2	1	92	-1	2	101	-1	2	78	-1	2	82	3.928	2.638	1.289
Control 1	-3	2	130	-3	2	155	-3	2	153	-3	2	120	-3	2	130	-3	2	132	4.863	4.804	0.059
Control 1	-3	2	157	-3	2	131	-3	2	173	-3	2	136	-3	2	167	-3	2	137	4.886	4.865	0.020
Control 1	-3	2	100	-3	2	117	-3	2	113	-3	2	163	-3	2	176	-3	2	161	4.740	4.921	-0.180
813	-5	1	74	-5	1	88	-5	1	96	0	50	21	0	50	13	0	50	21	6.934	-0.4357	7.370
813	-5	1	119	-5	1	106	-5	1	82	0	50	5	0	50	4	0	50	4	7.010	-1.062	8.072
806	-5	0.5	122	-5	0.5	129	-5	0.5	125	0	50	2	0	50	0	0	50	1	7.399	-1.523	8.922
806	-5	0.5	119	-5	0.5	117	-5	0.5	131	0	50	0	0	50	0	0	50	1	7.389	-1.699	9.088
806	-5	0.5	156	-5	0.5	124	-5	0.5	94	0	50	0	0	50	0	0	50	6	7.397	-0.9208	8.318
807	-3	0.5	91	-3	0.5	91	-3	0.5	94	0	50	0	0	50	0	0	50	0	5.265	#DIV/0!	#DIV/0!
807	-3	0.5	102	-3	0.5	87	-3	0.5	80	0	50	0	0	50	0	0	50	0	5.254	#DIV/0!	#DIV/0!
807	-3	0.5	88	-3	0.5	89	-3	0.5	104	0	50	0	0	50	0	0	50	0	5.273	#DIV/0!	#DIV/0!
Control 7	0	2	21	0	2	23	0	2	21	0	2	10	0	2	15	0	2	20	1.035	0.8751	0.160
Control 7	-1	1	76	-1	1	101	-1	1	74	0	2	59	0	2	45	0	2	39	2.923	1.377	1.545
Control 7	0	2	104	0	2	135	0	2	117	-1	1	76	-1	1	73	-1	1	68	1.773	2.859	-1.086

Table A.6a Biodosimetry Data Analysis WF-115-4

Test ID	Date	Microbe	Average UVT (%)	Lamp Ampere	Average Flow (m^3/hr)	Average Sensor$_{measured}$ (W/m^2)	log $i_{measured}$	a (i)	b (i^2)	RED$_{measured}$ (mJ/cm^2)	$D_{L\ measured}$ (mJ/cm^2/logi)	S/S$_o$	log i_{pred}	RED$_{pred}$ (mJ/cm^2)	$D_{L,\ pred}$ (mJ/cm^2/logi)
401	1/8/2019	MS2	99.15	11.0	50.63	184.5	3.406	15.626	2.0230	76.70	22.52	1.00	3.037	66.11	21.77
401	1/8/2019	MS2	99.15	11.0	50.63	184.5	3.337	15.626	2.0230	74.66	22.38	1.00	3.037	66.11	21.77
401	1/8/2019	MS2	99.15	11.0	50.63	184.5	3.444	15.626	2.0230	77.82	22.59	1.00	3.037	66.11	21.77
402	1/8/2019	MS2	99.25	11.0	105.20	188.1	2.031	15.626	2.0230	40.08	19.73	1.00	1.837	35.54	19.34
402	1/8/2019	MS2	99.25	11.0	105.20	188.1	1.981	15.626	2.0230	38.90	19.63	1.00	1.837	35.54	19.34
402	1/8/2019	MS2	99.25	11.0	105.20	188.1	2.037	15.626	2.0230	40.22	19.75	1.00	1.837	35.54	19.34
403	1/8/2019	MS2	65.36	11.0	5.94	55.37	3.393	15.626	2.0230	76.32	22.49	1.00	3.303	73.68	22.31
403	1/8/2019	MS2	65.36	11.0	5.94	55.37	3.414	15.626	2.0230	76.92	22.53	1.00	3.303	73.68	22.31
403	1/8/2019	MS2	65.36	11.0	5.94	55.37	3.460	15.626	2.0230	78.29	22.63	1.00	3.303	73.68	22.31
404	1/8/2019	MS2	69.46	11.0	31.09	58.88	1.159	15.626	2.0230	20.83	17.97	1.00	1.145	20.55	17.94
404	1/8/2019	MS2	69.46	11.0	31.09	58.88	1.107	15.626	2.0230	19.77	17.86	1.00	1.145	20.55	17.94
404	1/8/2019	MS2	69.46	11.0	31.09	58.88	1.105	15.626	2.0230	19.73	17.86	1.00	1.145	20.55	17.94
409	1/16/2019	MS2	94.66	11.0	24.88	124.4	3.732	15.302	2.2826	88.91	23.82	1.00	3.406	78.59	23.08
409	1/16/2019	MS2	94.66	11.0	24.88	124.4	3.694	15.302	2.2826	87.67	23.73	1.00	3.406	78.59	23.08
409	1/16/2019	MS2	94.66	11.0	24.88	124.4	3.677	15.302	2.2826	87.14	23.70	1.00	3.406	78.59	23.08
422	1/16/2019	MS2	99.22	7.0	99.35	74.74	1.058	15.302	2.2826	18.75	17.72	0.509	1.142	20.46	17.91
422	1/16/2019	MS2	99.22	7.0	99.35	74.74	1.037	15.302	2.2826	18.33	17.67	0.509	1.142	20.46	17.91
422	1/16/2019	MS2	99.22	7.0	99.35	74.74	1.117	15.302	2.2826	19.94	17.85	0.509	1.142	20.46	17.91
408	1/16/2019	MS2	95.35	7.0	99.36	65.07	0.9276	15.302	2.2826	16.16	17.42	0.509	0.7810	13.34	17.09
408	1/16/2019	MS2	95.35	7.0	99.36	65.07	0.7950	15.302	2.2826	13.61	17.12	0.509	0.7810	13.34	17.09
408	1/16/2019	MS2	95.35	7.0	99.36	65.07	0.8722	15.302	2.2826	15.08	17.29	0.509	0.7810	13.34	17.09
413	1/16/2019	MS2	87.62	7.0	14.77	50.12	2.322	15.302	2.2826	47.83	20.60	0.509	2.316	47.70	20.59
413	1/16/2019	MS2	87.62	7.0	14.77	50.12	2.390	15.302	2.2826	49.61	20.76	0.509	2.316	47.70	20.59
413	1/16/2019	MS2	87.62	7.0	14.77	50.12	2.370	15.302	2.2826	49.10	20.71	0.509	2.316	47.70	20.59
407	3/13/2019	MS2	97.42	5.2	5.23	52.43	5.567	16.351	2.0129	153.4	27.56	0.322	5.271	142.1	26.96
407	3/13/2019	MS2	97.42	5.2	5.23	52.43	5.607	16.351	2.0129	155.0	27.64	0.322	5.271	142.1	26.96
407	3/13/2019	MS2	97.42	5.2	5.23	52.43	5.583	16.351	2.0129	154.0	27.59	0.322	5.271	142.1	26.96
417	3/13/2019	MS2	86.52	9.6	5.25	93.83	6.261	16.351	2.0129	181.3	28.95	0.814	6.077	173.7	28.58
417	3/13/2019	MS2	86.52	9.6	5.25	93.83	6.223	16.351	2.0129	179.7	28.88	0.814	6.077	173.7	28.58
417	3/13/2019	MS2	86.52	9.6	5.25	93.83	6.153	16.351	2.0129	176.8	28.74	0.814	6.077	173.7	28.58
421	3/13/2019	MS2	69.30	11.0	5.14	57.03	3.994	16.351	2.0129	97.41	24.39	1.00	4.090	100.6	24.58

Table A.6a Biodosimetry Data Analysis WF-115-4

Test ID	Date	Microbe	Average UVT (%)	Lamp Ampere	Average Flow (m^3/hr)	Average Sensor$_{measured}$ (W/m^2)	log i$_{measured}$	a (i)	b (i^2)	RED$_{measured}$ (mJ/cm^2)	$D_{L\ measured}$ (mJ/cm^2/logi)	S/S$_o$	log i$_{pred}$	RED$_{pred}$ (mJ/cm^2)	$D_{L,\ pred}$ (mJ/cm^2/logi)
421	3/13/2019	MS2	69.30	11.0	5.14	57.03	3.993	16.351	2.0129	97.38	24.39	1.00	4.090	100.6	24.58
421	3/13/2019	MS2	69.30	11.0	5.14	57.03	3.897	16.351	2.0129	94.29	24.19	1.00	4.090	100.6	24.58
412	3/13/2019	MS2	94.28	11.0	12.42	146.5	5.208	16.351	2.0129	139.7	26.83	1.00	5.289	142.8	27.00
412	3/13/2019	MS2	94.28	11.0	12.42	146.5	5.262	16.351	2.0129	141.8	26.94	1.00	5.289	142.8	27.00
412	3/13/2019	MS2	94.28	11.0	12.42	146.5	5.376	16.351	2.0129	146.1	27.17	1.00	5.289	142.8	27.00
415	3/13/2019	MS2	87.22	9.1	10.83	86.60	3.606	16.351	2.0129	85.14	23.61	0.750	3.676	87.31	23.75
415	3/13/2019	MS2	87.22	9.1	10.83	86.60	3.556	16.351	2.0129	83.59	23.51	0.750	3.676	87.31	23.75
415	3/13/2019	MS2	87.22	9.1	10.83	86.60	3.691	16.351	2.0129	87.77	23.78	0.750	3.676	87.31	23.75
405	3/12/2019	T1UV	98.89	5.1	100.34	57.00	1.810	4.5337	0.097917	8.527	4.711	0.312	2.175	10.33	4.747
405	3/12/2019	T1UV	98.89	5.1	100.34	57.00	1.825	4.5337	0.097917	8.599	4.712	0.312	2.175	10.33	4.747
405	3/12/2019	T1UV	98.89	5.1	100.34	57.00	1.897	4.5337	0.097917	8.952	4.719	0.312	2.175	10.33	4.747
406	3/12/2019	T1UV	98.73	5.4	40.01	59.57	4.555	4.5337	0.097917	22.68	4.980	0.340	4.804	24.04	5.004
406	3/12/2019	T1UV	98.73	5.4	40.01	59.57	4.572	4.5337	0.097917	22.78	4.981	0.340	4.804	24.04	5.004
406	3/12/2019	T1UV	98.73	5.4	40.01	59.57	4.464	4.5337	0.097917	22.19	4.971	0.340	4.804	24.04	5.004
410	3/12/2019	T1UV	94.50	5.3	64.98	48.10	2.095	4.5337	0.097917	9.930	4.739	0.331	2.219	10.54	4.751
410	3/12/2019	T1UV	94.50	5.3	64.98	48.10	2.086	4.5337	0.097917	9.885	4.738	0.331	2.219	10.54	4.751
410	3/12/2019	T1UV	94.50	5.3	64.98	48.10	1.909	4.5337	0.097917	9.013	4.721	0.331	2.219	10.54	4.751
411	3/12/2019	T1UV	94.77	10.9	95.42	145.8	3.743	4.5337	0.097917	18.34	4.900	0.986	4.024	19.83	4.928
411	3/12/2019	T1UV	94.77	10.9	95.42	145.8	3.836	4.5337	0.097917	18.83	4.909	0.986	4.024	19.83	4.928
411	3/12/2019	T1UV	94.77	10.9	95.42	145.8	3.718	4.5337	0.097917	18.21	4.898	0.986	4.024	19.83	4.928
414	3/12/2019	T1UV	87.90	5.3	114.14	38.50	0.9731	4.5337	0.097917	4.505	4.629	0.331	1.005	4.657	4.632
414	3/12/2019	T1UV	87.90	5.3	114.14	38.50	1.023	4.5337	0.097917	4.738	4.634	0.331	1.005	4.657	4.632
414	3/12/2019	T1UV	87.90	5.3	114.14	38.50	1.087	4.5337	0.097917	5.042	4.640	0.331	1.005	4.657	4.632
416	3/12/2019	T1UV	87.83	7.2	25.18	63.30	5.099	4.5337	0.097917	25.66	5.033	0.521	5.073	25.52	5.030
416	3/12/2019	T1UV	87.83	7.2	25.18	63.30	5.024	4.5337	0.097917	25.25	5.026	0.521	5.073	25.52	5.030
416	3/12/2019	T1UV	87.83	7.2	25.18	63.30	4.938	4.5337	0.097917	24.77	5.017	0.521	5.073	25.52	5.030
419	3/12/2019	T1UV	69.89	7.2	24.95	31.43	2.510	4.5337	0.097917	12.00	4.779	0.521	2.513	12.01	4.780
419	3/12/2019	T1UV	69.89	7.2	24.95	31.43	2.383	4.5337	0.097917	11.36	4.767	0.521	2.513	12.01	4.780
419	3/12/2019	T1UV	69.89	7.2	24.95	31.43	2.460	4.5337	0.097917	11.75	4.775	0.521	2.513	12.01	4.780
420	3/12/2019	T1UV	70.00	9.1	25.10	45.02	3.303	4.5337	0.097917	16.04	4.857	0.750	3.389	16.49	4.866
420	3/12/2019	T1UV	70.00	9.1	25.10	45.02	3.348	4.5337	0.097917	16.28	4.862	0.750	3.389	16.49	4.866

Table A.6a Biodosimetry Data Analysis WF-115-4

Test ID	Date	Microbe	Average UVT (%)	Lamp Ampere	Average Flow (m^3/hr)	Average $Sensor_{measured}$ (W/m^2)	log $i_{measured}$	a (i)	b (i^2)	$RED_{measured}$ (mJ/cm^2)	$D_{L\ measured}$ (mJ/cm^2/logi)	S/S_o	log i_{pred}	RED_{pred} (mJ/cm^2)	$D_{L,\ pred}$ (mJ/cm^2/logi)
420	3/12/2019	T1UV	70.00	9.1	25.10	45.02	3.326	4.5337	0.097917	16.16	4.859	0.750	3.389	16.49	4.866
423	3/12/2019	T1UV	70.13	11.0	100.39	60.32	1.544	4.5337	0.097917	7.234	4.685	0.993	1.362	6.358	4.667
423	3/12/2019	T1UV	70.13	11.0	100.39	60.32	1.591	4.5337	0.097917	7.461	4.689	0.993	1.362	6.358	4.667
423	3/12/2019	T1UV	70.13	11.0	100.39	60.32	1.701	4.5337	0.097917	7.996	4.700	0.993	1.362	6.358	4.667
Control	3/12/2019	T1UV	99.29	0.0	198.73	0.0000	-0.1892	4.5337	0.097917	-0.8542	4.515	0.00	0.0000	0.000	0.000
Control	3/12/2019	T1UV	99.29	0.0	198.73	0.0000	-0.1029	4.5337	0.097917	-0.4657	4.524	0.00	0.0000	0.000	0.000
Control	3/12/2019	T1UV	99.29	0.0	198.73	0.0000	-0.1225	4.5337	0.097917	-0.5539	4.522	0.00	0.0000	0.000	0.000
Control 4	1/16/2019	MS2	99.11	0.0	100.18	0.0000	0.06040	15.302	2.2826	0.9326	15.44	0.00	0.0000	0.000	0.000
Control 4	1/16/2019	MS2	99.11	0.0	100.18	0.0000	-0.01138	15.302	2.2826	-0.1738	15.28	0.00	0.0000	0.000	0.000
Control 4	1/16/2019	MS2	99.11	0.0	100.18	0.0000	0.02625	15.302	2.2826	0.4033	15.36	0.00	0.0000	0.000	0.000
Control 5	3/13/2019	MS2	70.47	0.0	49.26	0.0000	-0.01450	16.351	2.0129	-0.2367	16.32	0.00	0.0000	0.000	0.000
Control 5	3/13/2019	MS2	70.47	0.0	49.26	0.0000	0.02110	16.351	2.0129	0.3458	16.39	0.00	0.0000	0.000	0.000
Control 5	3/13/2019	MS2	70.47	0.0	49.26	0.0000	0.08550	16.351	2.0129	1.413	16.52	0.00	0.0000	0.000	0.000
Control 1	1/8/2019	MS2	99.45	0.0	61.71	0.0000	0.059411	15.626	2.0230	0.93546	15.75	0.00	0.0000	0.000	0.000
Control 1	1/8/2019	MS2	99.45	0.0	61.71	0.0000	0.0202	15.626	2.0230	0.3172	15.67	0.00	0.0000	0.000	0.000
Control 1	1/8/2019	MS2	99.45	0.0	61.71	0.0000	-0.18046	15.626	2.0230	-2.7538	15.26	0.00	0.0000	0.000	0.000

Note: If a sample was removed from the dataset then "Measured logi, Measure DL, Measured RED, Predicted logi, Predicted DL, and Predicted RED" are shown as blanks

Table A.6b Biodosimetry Data Analysis for WF-125-6

Test ID	Date	Microbe	Average UVT (%)	Lamp Amp	Average Flow (m^3/hr)	Average Sensor$_{measured}$ (W/m^2)	$\log i_{measured}$	a (i)	b (i^2)	RED$_{measured}$ (mJ/cm^2)	$D_{L\ measured}$ (mJ/cm^2/logi)	S/S_o	$\log i_{pred}$	RED$_{pred}$ (mJ/cm^2)	$D_{L,\ pred}$ (mJ/cm^2/logi)
601	1/8/2019	MS2	98.18	10.0	76.39	68.38	3.756	15.626	2.0230	87.22	23.22	1.00	3.358	75.28	22.42
601	1/8/2019	MS2	98.18	10.0	76.39	68.38	3.688	15.626	2.0230	85.14	23.09	1.00	3.358	75.28	22.42
601	1/8/2019	MS2	98.18	10.0	76.39	68.38	3.636	15.626	2.0230	83.55	22.98	1.00	3.358	75.28	22.42
602	1/8/2019	MS2	97.82	10.0	200.57	64.76	1.838	15.626	2.0230	35.56	19.34	1.00	1.610	30.41	18.88
602	1/8/2019	MS2	97.82	10.0	200.57	64.76	1.780	15.626	2.0230	34.23	19.23	1.00	1.610	30.41	18.88
602	1/8/2019	MS2	97.82	10.0	200.57	64.76	1.754	15.626	2.0230	33.63	19.17	1.00	1.610	30.41	18.88
604	1/8/2019	MS2	68.23	10.0	30.67	3.37	1.271	15.626	2.0230	23.13	18.20	1.00	1.318	24.10	18.29
604	1/8/2019	MS2	68.23	10.0	30.67	3.37	1.372	15.626	2.0230	25.24	18.40	1.00	1.318	24.10	18.29
604	1/8/2019	MS2	68.23	10.0	30.67	3.37	1.333	15.626	2.0230	24.43	18.32	1.00	1.318	24.10	18.29
603	1/16/2019	MS2	71.45	10.0	9.86	3.91	2.961	15.302	2.2826	65.33	22.06	1.00	2.917	64.05	21.96
603	1/16/2019	MS2	71.45	10.0	9.86	3.91	2.915	15.302	2.2826	64.01	21.96	1.00	2.917	64.05	21.96
603	1/16/2019	MS2	71.45	10.0	9.86	3.91	2.981	15.302	2.2826	65.91	22.11	1.00	2.917	64.05	21.96
623	3/14/2019	MS2	97.87	6.0	198.73	25.68	0.798	16.530	1.7948	14.33	17.96	0.47	0.881	15.96	18.11
623	3/14/2019	MS2	97.87	6.0	198.73	25.68	0.876	16.530	1.7948	15.86	18.10	0.47	0.881	15.96	18.11
623	3/14/2019	MS2	97.87	6.0	198.73	25.68	0.852	16.530	1.7948	15.39	18.06	0.47	0.881	15.96	18.11
608	3/14/2019	MS2	94.72	6.8	197.10	21.85	0.751	16.530	1.7948	13.42	17.88	0.56	0.772	13.83	17.91
608	3/14/2019	MS2	94.72	6.8	197.10	21.85	0.789	16.530	1.7948	14.17	17.95	0.56	0.772	13.83	17.91
608	3/14/2019	MS2	94.72	6.8	197.10	21.85	0.753	16.530	1.7948	13.47	17.88	0.56	0.772	13.83	17.91
606	3/14/2019	MS2	97.84	9.9	28.46	57.98	6.399	16.530	1.7948	179.27	28.01	0.99	6.209	171.83	27.67
606	3/14/2019	MS2	97.84	9.9	28.46	57.98	6.445	16.530	1.7948	181.10	28.10	0.99	6.209	171.83	27.67
606	3/14/2019	MS2	97.84	9.9	28.46	57.98	6.357	16.530	1.7948	177.61	27.94	0.99	6.209	171.83	27.67
609	3/14/2019	MS2	94.23	10.0	49.65	42.53	3.328	16.530	1.7948	74.90	22.50	1.00	3.185	70.86	22.25
609	3/14/2019	MS2	94.23	10.0	49.65	42.53	3.231	16.530	1.7948	72.14	22.33	1.00	3.185	70.86	22.25
609	3/14/2019	MS2	94.23	10.0	49.65	42.53	3.225	16.530	1.7948	71.98	22.32	1.00	3.185	70.86	22.25
612	3/14/2019	MS2	95.35	9.9	22.56	44.32	5.598	16.530	1.7948	148.78	26.58	0.99	5.787	155.77	26.92
612	3/14/2019	MS2	95.35	9.9	22.56	44.32	5.582	16.530	1.7948	148.19	26.55	0.99	5.787	155.77	26.92
612	3/14/2019	MS2	95.35	9.9	22.56	44.32	5.691	16.530	1.7948	152.21	26.74	0.99	5.787	155.77	26.92
613	3/14/2019	MS2	87.68	6.3	29.94	10.62	1.950	16.530	1.7948	39.07	20.03	0.51	1.895	37.77	19.93
613	3/14/2019	MS2	87.68	6.3	29.94	10.62	1.898	16.530	1.7948	37.83	19.94	0.51	1.895	37.77	19.93
613	3/14/2019	MS2	87.68	6.3	29.94	10.62	1.944	16.530	1.7948	38.91	20.02	0.51	1.895	37.77	19.93
617	3/14/2019	MS2	85.91	10.0	10.14	18.48	5.421	16.530	1.7948	142.34	26.26	1.00	5.416	142.17	26.25

Table A.6b Biodosimetry Data Analysis for WF-125-6

Test ID	Date	Microbe	Average UVT (%)	Lamp Amp	Average Flow (m^3/hr)	Average Sensor$_{measured}$ (W/m^2)	log i$_{measured}$	a (i)	b (i^2)	RED$_{measured}$ (mJ/cm^2)	D$_{L\ measured}$ (mJ/cm^2/logi)	S/S$_o$	log i$_{pred}$	RED$_{pred}$ (mJ/cm^2)	D$_{L,\ pred}$ (mJ/cm^2/logi)
617	3/14/2019	MS2	85.91	10.0	10.14	18.48	5.339	16.530	1.7948	139.41	26.11	1.00	5.416	142.17	26.25
617	3/14/2019	MS2	85.91	10.0	10.14	18.48	5.501	16.530	1.7948	145.23	26.40	1.00	5.416	142.17	26.25
615	3/14/2019	MS2	88.65	8.3	21.94	17.12	3.188	16.530	1.7948	70.93	22.25	0.76	3.239	72.38	22.34
615	3/14/2019	MS2	88.65	8.3	21.94	17.12	3.115	16.530	1.7948	68.91	22.12	0.76	3.239	72.38	22.34
615	3/14/2019	MS2	88.65	8.3	21.94	17.12	3.265	16.530	1.7948	73.11	22.39	0.76	3.239	72.38	22.34
605	3/12/2019	T1UV	99.23	6.0	198.47	32.37	2.991	4.5337	0.097917	14.44	4.83	0.47	3.375	16.42	4.86
605	3/12/2019	T1UV	99.23	6.0	198.47	32.37	2.996	4.5337	0.097917	14.46	4.83	0.47	3.375	16.42	4.86
605	3/12/2019	T1UV	99.23	6.0	198.47	32.37	2.924	4.5337	0.097917	14.09	4.82	0.47	3.375	16.42	4.86
610	3/12/2019	T1UV	94.11	4.7	134.83	12.48	1.851	4.5337	0.097917	8.73	4.71	0.33	1.969	9.31	4.73
610	3/12/2019	T1UV	94.11	4.7	134.83	12.48	1.850	4.5337	0.097917	8.72	4.71	0.33	1.969	9.31	4.73
610	3/12/2019	T1UV	94.11	4.7	134.83	12.48	1.935	4.5337	0.097917	9.14	4.72	0.33	1.969	9.31	4.73
611	3/12/2019	T1UV	94.54	9.4	159.30	37.97	3.989	4.5337	0.097917	19.64	4.92	0.91	4.039	19.91	4.93
611	3/12/2019	T1UV	94.54	9.4	159.30	37.97	4.129	4.5337	0.097917	20.39	4.94	0.91	4.039	19.91	4.93
611	3/12/2019	T1UV	94.54	9.4	159.30	37.97	4.066	4.5337	0.097917	20.06	4.93	0.91	4.039	19.91	4.93
614	3/12/2019	T1UV	87.89	4.7	230.28	6.92	0.917	4.5337	0.097917	4.24	4.62	0.33	0.868	4.01	4.62
614	3/12/2019	T1UV	87.89	4.7	230.28	6.92	0.908	4.5337	0.097917	4.20	4.62	0.33	0.868	4.01	4.62
614	3/12/2019	T1UV	87.89	4.7	230.28	6.92	0.918	4.5337	0.097917	4.25	4.62	0.33	0.868	4.01	4.62
616	3/12/2019	T1UV	87.50	6.3	45.14	10.37	3.959	4.5337	0.097917	19.48	4.92	0.51	4.059	20.02	4.93
616	3/12/2019	T1UV	87.50	6.3	45.14	10.37	4.129	4.5337	0.097917	20.39	4.94	0.51	4.059	20.02	4.93
616	3/12/2019	T1UV	87.50	6.3	45.14	10.37	4.000	4.5337	0.097917	19.70	4.93	0.51	4.059	20.02	4.93
619	3/12/2019	T1UV	69.81	5.6	25.03	1.90	2.153	4.5337	0.097917	10.21	4.74	0.42	2.268	10.78	4.76
619	3/12/2019	T1UV	69.81	5.6	25.03	1.90	2.131	4.5337	0.097917	10.11	4.74	0.42	2.268	10.78	4.76
619	3/12/2019	T1UV	69.81	5.6	25.03	1.90	2.127	4.5337	0.097917	10.09	4.74	0.42	2.268	10.78	4.76
620	3/12/2019	T1UV	69.80	8.3	25.16	2.07	3.175	4.5337	0.097917	15.38	4.84	0.76	3.311	16.08	4.86
620	3/12/2019	T1UV	69.80	8.3	25.16	2.07	3.358	4.5337	0.097917	16.33	4.86	0.76	3.311	16.08	4.86
620	3/12/2019	T1UV	69.80	8.3	25.16	2.07	3.244	4.5337	0.097917	15.74	4.85	0.76	3.311	16.08	4.86
621	3/12/2019	T1UV	69.98	10.0	22.32	2.78	4.347	4.5337	0.097917	21.56	4.96	1.00	4.314	21.38	4.96
621	3/12/2019	T1UV	69.98	10.0	22.32	2.78	4.385	4.5337	0.097917	21.76	4.96	1.00	4.314	21.38	4.96
621	3/12/2019	T1UV	69.98	10.0	22.32	2.78	4.402	4.5337	0.097917	21.85	4.96	1.00	4.314	21.38	4.96
622	3/12/2019	T1UV	70.17	10.0	200.57	2.83	1.122	4.5337	0.097917	5.21	4.64	1.00	1.013	4.69	4.63
622	3/12/2019	T1UV	70.17	10.0	200.57	2.83	1.151	4.5337	0.097917	5.35	4.65	1.00	1.013	4.69	4.63

Table A.6b Biodosimetry Data Analysis for WF-125-6

Test ID	Date	Microbe	Average UVT (%)	Lamp Amp	Average Flow (m^3/hr)	Average Sensor$_{measured}$ (W/m^2)	log i$_{measured}$	a (i)	b (i^2)	RED$_{measured}$ (mJ/cm^2)	$D_{L\ measured}$ ($mJ/cm^2/logi$)	S/S$_o$	log i$_{pred}$	RED$_{pred}$ (mJ/cm^2)	$D_{L,\ pred}$ ($mJ/cm^2/logi$)
622	3/12/2019	T1UV	70.17	10.0	200.57	2.83	1.164	4.5337	0.097917	5.41	4.65	1.00	1.013	4.69	4.63
Control	3/12/2019	T1UV	99.29	0.0	198.73	0.00	-0.189	4.5337	0.097917	-0.85	4.52	0.00	0.000	0.00	0.00
Control	3/12/2019	T1UV	99.29	0.0	198.73	0.00	-0.103	4.5337	0.097917	-0.47	4.52	0.00	0.000	0.00	0.00
Control	3/12/2019	T1UV	99.29	0.0	198.73	0.00	-0.123	4.5337	0.097917	-0.55	4.52	0.00	0.000	0.00	0.00
Control 4	1/16/2019	MS2	99.11	0.0	100.18	0.00	0.060	15.302	2.2826	0.93	15.44	0.00	0.000	0.00	0.00
Control 4	1/16/2019	MS2	99.11	0.0	100.18	0.00	-0.011	15.302	2.2826	-0.17	15.28	0.00	0.000	0.00	0.00
Control 4	1/16/2019	MS2	99.11	0.0	100.18	0.00	0.026	15.302	2.2826	0.40	15.36	0.00	0.000	0.00	0.00
Control 1	1/8/2019	MS2	99.45	0.0	61.71	0.00	0.059	15.626	2.0230	0.94	15.75	0.00	0.000	0.00	0.00
Control 1	1/8/2019	MS2	99.45	0.0	61.71	0.00	0.020	15.626	2.0230	0.32	15.67	0.00	0.000	0.00	0.00
Control 1	1/8/2019	MS2	99.45	0.0	61.71	0.00	-0.180	15.626	2.0230	-2.75	15.26	0.00	0.000	0.00	0.00
Control 6	3/14/2019	MS2	99.50	0.0	198.73	0.00	0.002	16.530	1.7948	0.03	16.53	0.00	0.000	0.00	0.00
Control 6	3/14/2019	MS2	99.50	0.0	198.73	0.00	0.000	16.530	1.7948	0.00	#DIV/0!	0.00	0.000	0.00	0.00
Control 6	3/14/2019	MS2	99.50	0.0	198.73	0.00	0.052	16.530	1.7948	0.87	16.62	0.00	0.000	0.00	0.00
607	3/12/2019	T1UV	97.76	4.7	70.19	18.13	4.063	4.5337	0.097917	20.04	4.93	0.33	-	-	-
607	3/12/2019	T1UV	97.76	4.7	70.19	18.13	4.100	4.5337	0.097917	20.23	4.94	0.33	-	-	-
607	3/12/2019	T1UV	97.76	4.7	70.19	18.13	4.185	4.5337	0.097917	20.69	4.94	0.33	-	-	-

Note: If a sample was removed from the dataset then "Predicted logi, Predicted DL, and Predicted RED" are shown as blanks

Table A.6c   Biodosimetry Data Analysis WF-225-8

Test ID	Date	Microbe	Average UVT (%)	Lamp Amp	Average Flow (m^3/hr)	Average Sensor$_{measured}$ (W/m^2)	log $i_{measured}$	a (i)	b (i^2)	RED$_{measured}$ (mJ/cm^2)	$D_{L\ measured}$ (mJ/cm^2/logi)	S/S_o	log i_{pred}	RED$_{pred}$ (mJ/cm^2)	$D_{L,\ pred}$ (mJ/cm^2/logi)
801	1/8/2019	MS2	97.99	10.0	261.30	136.4	2.904	15.626	2.0230	62.45	21.50	1.00	2.704	57.05	21.10
801	1/8/2019	MS2	97.99	10.0	261.30	136.4	2.900	15.626	2.0230	62.33	21.49	1.00	2.704	57.05	21.10
801	1/8/2019	MS2	97.99	10.0	261.30	136.4	2.758	15.626	2.0230	58.48	21.20	1.00	2.704	57.05	21.10
802	1/8/2019	MS2	99.06	10.0	502.62	142.8	1.969	15.626	2.0230	38.61	19.61	1.00	1.892	36.81	19.45
802	1/8/2019	MS2	99.06	10.0	502.62	142.8	2.038	15.626	2.0230	40.26	19.75	1.00	1.892	36.81	19.45
802	1/8/2019	MS2	99.06	10.0	502.62	142.8	2.089	15.626	2.0230	41.48	19.85	1.00	1.892	36.81	19.45
803	1/8/2019	MS2	69.91	10.0	14.61	17.31	4.664	15.626	2.0230	116.89	25.06	1.00	4.771	120.60	25.28
803	1/8/2019	MS2	69.91	10.0	14.61	17.31	4.705	15.626	2.0230	118.30	25.14	1.00	4.771	120.60	25.28
803	1/8/2019	MS2	69.91	10.0	14.61	17.31	4.757	15.626	2.0230	120.11	25.25	1.00	4.771	120.60	25.28
804	1/8/2019	MS2	70.11	10.0	98.26	17.96	1.353	15.626	2.0230	24.83	18.36	1.00	1.459	27.11	18.58
804	1/8/2019	MS2	70.11	10.0	98.26	17.96	1.344	15.626	2.0230	24.67	18.35	1.00	1.459	27.11	18.58
804	1/8/2019	MS2	70.11	10.0	98.26	17.96	1.351	15.626	2.0230	24.81	18.36	1.00	1.459	27.11	18.58
819	3/19/2019	MS2	69.91	10.0	39.95	20.90	2.587	14.725	2.4651	54.59	21.10	0.99	2.567	54.04	21.05
819	3/19/2019	MS2	69.91	10.0	39.95	20.90	2.518	14.725	2.4651	52.70	20.93	0.99	2.567	54.04	21.05
819	3/19/2019	MS2	69.91	10.0	39.95	20.90	2.442	14.725	2.4651	50.67	20.75	0.99	2.567	54.04	21.05
816	3/19/2019	MS2	87.78	7.6	48.93	44.80	3.217	14.725	2.4651	72.88	22.66	0.66	3.323	76.14	22.92
816	3/19/2019	MS2	87.78	7.6	48.93	44.80	3.187	14.725	2.4651	71.96	22.58	0.66	3.323	76.14	22.92
816	3/19/2019	MS2	87.78	7.6	48.93	44.80	3.199	14.725	2.4651	72.32	22.61	0.66	3.323	76.14	22.92
808	3/19/2019	MS2	98.39	4.7	496.84	51.55	0.772	14.725	2.4651	12.83	16.63	0.31	0.737	12.19	16.54
808	3/19/2019	MS2	98.39	4.7	496.84	51.55	0.652	14.725	2.4651	10.66	16.33	0.31	0.737	12.19	16.54
808	3/19/2019	MS2	98.39	4.7	496.84	51.55	0.644	14.725	2.4651	10.51	16.31	0.31	0.737	12.19	16.54
809	3/19/2019	MS2	95.15	4.6	499.20	38.20	0.497	14.725	2.4651	7.93	15.95	0.31	0.553	8.89	16.09
809	3/19/2019	MS2	95.15	4.6	499.20	38.20	0.572	14.725	2.4651	9.23	16.14	0.31	0.553	8.89	16.09
809	3/19/2019	MS2	95.15	4.6	499.20	38.20	0.552	14.725	2.4651	8.88	16.09	0.31	0.553	8.89	16.09
814	3/19/2019	MS2	87.49	4.7	500.25	21.38	0.324	14.725	2.4651	5.02	15.52	0.32	0.378	5.92	15.66
814	3/19/2019	MS2	87.49	4.7	500.25	21.38	0.411	14.725	2.4651	6.46	15.74	0.32	0.378	5.92	15.66
814	3/19/2019	MS2	87.49	4.7	500.25	21.38	0.356	14.725	2.4651	5.56	15.60	0.32	0.378	5.92	15.66
818	3/19/2019	MS2	87.63	10.0	23.03	70.93	6.836	14.725	2.4651	215.84	31.58	0.99	6.602	204.68	31.00
818	3/19/2019	MS2	87.63	10.0	23.03	70.93	6.668	14.725	2.4651	207.78	31.16	0.99	6.602	204.68	31.00
818	3/19/2019	MS2	87.63	10.0	23.03	70.93	6.896	14.725	2.4651	218.75	31.72	0.99	6.602	204.68	31.00
813	3/19/2019	MS2	94.18	7.6	24.54	74.03	7.066	14.725	2.4651	227.14	32.14	0.66	6.915	219.69	31.77

Table A.6c   Biodosimetry Data Analysis WF-225-8

Test ID	Date	Microbe	Average UVT (%)	Lamp Amp	Average Flow (m^3/hr)	Average Sensor$_{measured}$ (W/m^2)	log $i_{measured}$	a (i)	b (i^2)	RED$_{measured}$ (mJ/cm^2)	$D_{L\ measured}$ (mJ/cm^2/logi)	S/S_o	log i_{pred}	RED$_{pred}$ (mJ/cm^2)	$D_{L,\ pred}$ (mJ/cm^2/logi)
810	3/19/2019	MS2	94.26	10.0	99.89	116.3	3.842	14.725	2.4651	92.96	24.20	0.99	3.818	92.14	24.14
810	3/19/2019	MS2	94.26	10.0	99.89	116.3	3.729	14.725	2.4651	89.18	23.92	0.99	3.818	92.14	24.14
810	3/19/2019	MS2	94.26	10.0	99.89	116.3	3.777	14.725	2.4651	90.78	24.04	0.99	3.818	92.14	24.14
820	3/19/2019	T1UV	70.01	9.3	49.74	20.03	6.011	4.8749	0.000	29.30	4.87	0.90	6.036	29.42	4.87
820	3/19/2019	T1UV	70.01	9.3	49.74	20.03	6.047	4.8749	0.000	29.48	4.87	0.90	6.036	29.42	4.87
820	3/19/2019	T1UV	70.01	9.3	49.74	20.03	5.973	4.8749	0.000	29.12	4.87	0.90	6.036	29.42	4.87
817	3/19/2019	T1UV	87.48	6.4	99.10	35.53	5.164	4.8749	0.000	25.17	4.87	0.51	5.209	25.40	4.87
817	3/19/2019	T1UV	87.48	6.4	99.10	35.53	5.206	4.8749	0.000	25.38	4.87	0.51	5.209	25.40	4.87
817	3/19/2019	T1UV	87.48	6.4	99.10	35.53	5.160	4.8749	0.000	25.16	4.87	0.51	5.209	25.40	4.87
821	3/19/2019	T1UV	70.28	9.4	99.39	21.05	3.831	4.8749	0.000	18.68	4.87	0.91	3.683	17.96	4.87
821	3/19/2019	T1UV	70.28	9.4	99.39	21.05	3.787	4.8749	0.000	18.46	4.87	0.91	3.683	17.96	4.87
821	3/19/2019	T1UV	70.28	9.4	99.39	21.05	3.796	4.8749	0.000	18.51	4.87	0.91	3.683	17.96	4.87
812	3/19/2019	T1UV	95.93	9.2	299.15	123.4	5.832	4.8749	0.000	28.43	4.87	0.88	6.110	29.79	4.87
812	3/19/2019	T1UV	95.93	9.2	299.15	123.4	5.873	4.8749	0.000	28.63	4.87	0.88	6.110	29.79	4.87
812	3/19/2019	T1UV	95.93	9.2	299.15	123.4	6.139	4.8749	0.000	29.93	4.87	0.88	6.110	29.79	4.87
811	3/19/2019	T1UV	95.26	4.7	349.89	40.07	2.048	4.8749	0.000	9.99	4.87	0.32	2.113	10.30	4.87
811	3/19/2019	T1UV	95.26	4.7	349.89	40.07	2.075	4.8749	0.000	10.12	4.87	0.32	2.113	10.30	4.87
811	3/19/2019	T1UV	95.26	4.7	349.89	40.07	2.048	4.8749	0.000	9.98	4.87	0.32	2.113	10.30	4.87
805	3/19/2019	T1UV	99.64	8.7	498.94	150.7	5.766	4.8749	0.000	28.11	4.87	0.80	5.714	27.86	4.87
805	3/19/2019	T1UV	99.64	8.7	498.94	150.7	5.932	4.8749	0.000	28.92	4.87	0.80	5.714	27.86	4.87
805	3/19/2019	T1UV	99.64	8.7	498.94	150.7	5.502	4.8749	0.000	26.82	4.87	0.80	5.714	27.86	4.87
815	3/19/2019	T1UV	88.34	6.8	498.68	39.37	1.573	4.8749	0.000	7.67	4.87	0.55	1.598	7.79	4.87
815	3/19/2019	T1UV	88.34	6.8	498.68	39.37	1.520	4.8749	0.000	7.41	4.87	0.55	1.598	7.79	4.87
815	3/19/2019	T1UV	88.34	6.8	498.68	39.37	1.619	4.8749	0.000	7.89	4.87	0.55	1.598	7.79	4.87
822	3/19/2019	T1UV	70.84	9.9	496.84	22.28	1.408	4.8749	0.000	6.87	4.87	0.98	1.200	5.85	4.87
822	3/19/2019	T1UV	70.84	9.9	496.84	22.28	1.260	4.8749	0.000	6.14	4.87	0.98	1.200	5.85	4.87
822	3/19/2019	T1UV	70.84	9.9	496.84	22.28	1.289	4.8749	0.000	6.28	4.87	0.98	1.200	5.85	4.87
Control 1	1/8/2019	MS2	99.45	0.0	61.71	0.00	0.059	15.626	2.0230	0.94	15.75	0.00	0.000	0.00	0.00
Control 1	1/8/2019	MS2	99.45	0.0	61.71	0.00	0.020	15.626	2.0230	0.32	15.67	0.00	0.000	0.00	0.00
Control 1	1/8/2019	MS2	99.45	0.0	61.71	0.00	-0.180	15.626	2.0230	-2.75	15.26	0.00	0.000	0.00	0.00
813	3/19/2019	MS2	94.18	7.6	24.54	74.03	7.370	14.725	2.4651	242.43	32.89	0.66	-	-	-

Table A.6c Biodosimetry Data Analysis WF-225-8

Test ID	Date	Microbe	Average UVT (%)	Lamp Amp	Average Flow (m^3/hr)	Average Sensor$_{measured}$ (W/m^2)	log i$_{measured}$	a (i)	b (i^2)	RED$_{measured}$ (mJ/cm^2)	D$_{L\ measured}$ (mJ/cm^2/logi)	S/S$_o$	log i$_{pred}$	RED$_{pred}$ (mJ/cm^2)	D$_{L,\ pred}$ (mJ/cm^2/logi)
813	3/19/2019	MS2	94.18	7.6	24.54	74.03	8.072	14.725	2.4651	279.49	34.62	0.66	-	-	-
806	3/19/2019	MS2	99.10	10.0	41.74	188.83	8.922	14.725	2.4651	327.60	36.72	0.99	-	-	-
806	3/19/2019	MS2	99.10	10.0	41.74	188.83	9.088	14.725	2.4651	337.39	37.13	0.99	-	-	-
806	3/19/2019	MS2	99.10	10.0	41.74	188.83	8.318	14.725	2.4651	293.02	35.23	0.99	-	-	-
807	3/19/2019	T1UV	99.17	5.1	140.59	68.38	#DIV/0!	4.8749	0.000	#DIV/0!	#DIV/0!	0.35	-	-	-
807	3/19/2019	T1UV	99.17	5.1	140.59	68.38	#DIV/0!	4.8749	0.000	#DIV/0!	#DIV/0!	0.35	-	-	-
807	3/19/2019	T1UV	99.17	5.1	140.59	68.38	#DIV/0!	4.8749	0.000	#DIV/0!	#DIV/0!	0.35	-	-	-
Control 7	3/19/2019	T1UV	99.59	0.0	494.47	0.00	0.160	4.8749	0.000	0.78	4.87	0.00	-	-	-
Control 7	3/19/2019	T1UV	99.59	0.0	494.47	0.00	1.545	4.8749	0.000	7.53	4.87	0.00	-	-	-
Control 7	3/19/2019	T1UV	99.59	0.0	494.47	0.00	-1.086	4.8749	0.000	-5.29	4.87	0.00	-	-	-

Note: If a sample was removed from the dataset then "Predicted logi, Predicted DL, and Predicted RED" are shown as blanks

Biodosimetry QA/QC

Controls and Blanks

Control samples were influent and effluent samples collected with MS2 or T1UV injection on and the UV lamps off. Table 1 presents data on the control samples collected during reactor validation. The differences in the log concentration between individual effluent and influent samples ranged from -0.138 to 0.03 log and averaged -0.02 log, indicating that there was no change in test microbe concentration through the UV reactor when the lamps were turned off.

Table 1 Controls Collected During Validation Testing

Microbe	Date	Average Log Influent	Average Log Effluent	Δ
MS2	1/9/2019	4.83	4.86	-0.034
MS2	1/16/2019	3.77	3.74	0.025
T1UV	3/12/2019	3.17	3.30	-0.138
MS2	3/14/2019	4.19	4.17	0.018
MS2	3/13/2019	5.23	5.20	0.031
Average				-0.020

Trip controls were MS2 and T1UV samples prepared in buffered water by the microbiology lab. One aliquot of the sample was shipped to the Portland Test Facility with the stock solutions while a second aliquot remained with the lab. The aliquot shipped to Portland was shipped back to the lab with the biodosimetry samples. Upon receipt, the lab measured and compared the test microbe concentration of both aliquots. Ideally, the concentrations with both samples should be the same indicating no degradation of the test microbe solutions during shipment and storage at the Portland Test Facility.

Table 2 presents data of the trip controls. The trip controls indicated changes in test microbe concentrations ranging from -0.59 to 0.66 percent with an average of -0.05 percent. Therefore, the change in test microbe concentrations met the 3 to 5 percent UVDGM criteria.

Table 2 Trip Controls Evaluated During Validation

Date	Microbe	Log Concentration			
		Before	After	Difference	Percent Difference
1/10/2019	MS2	11.93	11.85	0.08	0.66%
3/12/2019	T1UV	10.55	10.58	-0.02	-0.21%
3/13/2019	MS2	11.86	11.93	-0.07	-0.59%
Average				-0.004	-0.05%

Blank samples were influent and effluent samples collected with the UV reactor lamps on, while halting microbe injection. Prior to sample collection, the system was flushed with groundwater for a period corresponding to five residence times of the system (injection loop, inlet piping, reactor and outlet piping). Table 3 presents data on the blank samples. Theoretically, the blanks should have zero plate counts. The MS2 phage concentration in the influent blanks ranged from 0.44 to 66,333 PFU/mL. This would have added a maximum of 1.07 log to the minimum influent concentration measured during bioassay testing. This amount, however, would have been measured during the collection of the influent samples. The T1UV phage concentration in the influent blanks ranged from 0.0 to 1.72 PFU/mL, which was at most 0.17 percent of the minimum concentration used during biodosimetry testing.

The MS2 phage concentrations in the effluent blanks ranged from 0.11 to 4.33 PFU/mL. The T1UV concentrations in the effluent blanks ranged from 0 PFU/mL to 0.17. During biodosimetry testing, the minimum measured concentrations of effluent microbes for all reactors were 0.727 PFU/mL and 0.247 PFU/mL for MS2 and T1UV, respectively. Of the 223 samples collected and used to develop the dose algorithms for the three reactors in this report, 30 effluent samples (13.5 percent of the total effluent samples) resulted in counts less than 10 PFU/mL. For these biodosimetry samples with low effluent concentrations, residual concentrations of phage will result in an underestimation of log inactivation by the UV reactor. If the underestimation was significant, the test conditions are identified as outliers and removed from the analysis that developed the dose monitoring equations for a given reactor.

Table 3 Blanks Collected During Validation Testing

Microbe	Date	Avg Influent	Avg Effluent
		PFU /mL*	
MS2	1/9/2019	3.17	0.11
MS2	1/16/2019	0.44	4.33
T1UV	3/12/2019	1.72	0.17
MS2	3/14/2019	2.9	0.72
MS2	3/13/2019	66,333	0.78
MS2	3/19/2019	1.94	0.11
T1UV	3/19/2019	0.0	0.00

*Plaque forming units per milliliter

Method blanks were sterilized dilution water that was assayed for MS2 and T1UV concentrations. Ideally, the samples have non-detect test microbe concentrations. Detectable concentrations of the test microbe indicate potential cross-contamination of samples.

Table 4 presents data on the method blanks. Each method blank was assayed three times. Of the 33 assays, 29 resulted in no enumerable plaques, while three resulted in 0.5 PFU/mL, and one resulted in 0.1 PFU/mL. The method blanks show minimal if any cross contamination was occurring with the lab assays.

Table 4 Method Blanks Collected During Validation Testing

Microbe	Date	Replicate 1 PFU/mL	Replicate 2 PFU/mL	Replicate 3 PFU/mL
MS2	1/16/2019	0	0.5	0.5
MS2	1/16/2019	0	0	0.1
T1UV	3/14/2019	0	0	0
T1UV	3/14/2019	0	0	0
MS2	3/18/2019	0	0	0
T1UV	3/15/2019	0	0	0
T1UV	3/18/2019	0	0	0
MS2	3/20/2019	0	0	0
MS2	3/19/2019	0	0	0.5
MS2	3/20/2019	0	0	0
MS2	3/20/2019	0	0	0

Bacteriophage Sample Stability

Influent and effluent samples for several test conditions were randomly sampled for temporal stability analysis of the MS2 and T1UV bacteriophage concentrations. The samples were stored at 4°C and the MS2 and T1UV bacteriophage concentrations were periodically measured over time. Table 5 summarizes the results of the stability analyses, including the hold time, and starting and ending concentrations. The MS2 influent and effluent concentrations changed at an average rate of 0.022 and 0.021 log per day, respectively. The T1UV influent and effluent concentrations changed at an average rate of -0.002 and 0.004 log per day, respectively. The results indicate that the phage were stable over the validation test period.

Table 5 Test Conditions and Results of Stability Analysis

Phage	Test #	Date	Influent log	Effluent log	Influent rate of Change Per Day	Effluent rate of Change Per Day
MS2	802	1/11/2019	4.83	2.80	0.023	0.028
		1/23/2019	4.55	2.46		
MS2	603	1/18/2019	5.12	2.17	0.029	0.039
		1/23/2019	4.98	1.98		
MS2	819	3/26/2019	4.51	2.05	0.004	-0.012
		3/22/2019	4.52	2.00		
MS2	609	3/19/2019	5.81	2.55	0.031	0.029
		3/29/2019	5.49	2.26		
T1UV	811	3/21/2019	4.37	2.31	-0.002	0.004
		3/29/2019	4.38	2.28		

carollo
Engineers...Working Wonders With Water™

January 5, 2010

GAP EnviroMicrobial Services
1020 Hargrieve Road, Unit 14
London, Ontario, Canada
N6E 1P5

Attention: Mr. Conrad Odegaard

Subject: GAP EnviroMicrobial Services of London, Ontario Canada - Observations, December 28, 2009

Dear Conrad Odegaard:

This letter summarizes observations made on December 28, 2009 at the laboratory facilities of GAP EnviroMicrobial Services of London, Ontario, Canada.

Collimated Beam Apparatus Measurement Uncertainty

The USEPA UV Disinfection Guidance Manual (UVDGM) provides recommendations for the measurement uncertainty for the UV dose calculated when using the collimated beam apparatus.

Depth of Suspension. The recommended uncertainty for the depth of the suspension is ≤ 10%. The depth of suspension calculated using:

$$d= \frac{V_s + V_{sb}}{\pi \times D^2/4}$$

where V_s is the suspension volume, V_{sb} is the stir bar volume, and D is the Petri dish diameter. The suspension volume is added to the dish using a pipette. The typical suspension volume is 10 mL. The uncertainty of the volume delivered by the pipette is ± 2%. The stir bar volume is 0.028 mL. The uncertainty of the stir bar volume is negligible compared to the suspension volume and can be ignored. The Petri dish diameter is measured using a ruler with 1 mm graduation marks. The Petri dish diameter is typically 5.0 cm. The measurement uncertainty of the Petri dish diameter is estimated as ± 1 mm. This uncertainty applies twice since the the ruler has to define the measurement position of two locations to define a distance. Hence, the uncertainty of the distance measured using the ruler is $(1^2+1^2)^{0.5}$=1.4 mm. The uncertainty of the diameter is estimated as 0.14/5.0 = 2.8 %. The typical suspension depth is calculated as 0.511 cm. The measurement uncertainty of the depth is estimated as $(2^2+2\times2.8^2)^{0.5}$=4.43%.

Average Incident Irradiance. The recommended uncertainty of the average incident irradiance is ≤ 8%. The irradiance is measured using an IL 1700 radiometer (PN 5296) equipped with an SED 240 sensor (PN 6497) with QNDS2 filter (PN 29167) and input optic W (PN 12831). The measurement is done before and after each irradiation using the collimated beam apparatus. The measured irradiance is corrected for the error of the radiometer estimated as the ratio of the intensity measured by the radiometer to the average value measured using three radiometers.

The radiometers are manufactured and calibrated by International Light of Peabody, MA. The calibration certificate states that the measurement uncertainty of the NIST standard used to calibrate the radiometer is 1% and the transfer uncertainty to the customer as ± 6.5%. Hence the total uncertainty of the radiometer is $(1^2+6.6^2)^{0.5}$=6.58%. The applied correction factor potentially reduces the measurement uncertainty by a factor of $3^{0.5}$, resulting in an uncertainty of $6.58/3^{0.5}$ = 3.80 %. However, this reduction assumes that the error on the three radiometers is randomly distributed about the true measurement.

Petri Factor. The recommended uncertainty of the Petri factor is ≤ 5%. The Petri factor is calculated as the UV intensity measured at the center of the suspension surface divided by the average of the UV intensities measured across the suspension surface. GAP uses the same radiometer to make all measurements used to calculate the Petri factor. GAP measures the UV intensity across the suspension surface using two transects located 90° apart. The data measured across the two transects is used to estimate the UV intensities across the suspension surface. This estimate makes assumptions about the pattern of the UV intensity field across the suspension surface that should be confirmed. Because the Petri factor, is calculated as the ratio of UV intensities measured using the same radiometer, the uncertainty of the Petri factor is defined by the precision of the radiometer measurements as opposed to the absolute accuracy of those measurements. GAP estimated the precision by repeating the Petri factor calculation with a given dish. The average and standard deviation of those measurements were 0.990 ± 0.005. Thus the measurement uncertainty is estimated as 2×0.005/0.990 = 1 %.

Divergence Factor. The recommended uncertainty of the divergence factor is ≤ 1%. The divergence factor is calculated as:

$$D_f = \frac{L}{d+L}$$

Where L is the distance from the UV lamps to the surface of the Petri dish. The distance L is measured by GAP using a tape measure with 1 mm gradations. The distance L is typically 41.1 cm. The measurement uncertainty of the distance L is defined by the uncertainty defining the starting and ending points. This uncertainty is likely greater than 1 mm. For this calculation, the uncertainty is estimated as 0.5 cm of 1.21%. The uncertainty of the distance d is estimated as 5 cm × 4.43 % = 0.22 cm. Hence the measurement uncertainty of the term d+L is estimated as $(0.22^2+0.5^2)^{0.5}$=0.547 cm or 1.18 %. The uncertainty of the divergence factor is estimated as $(1.21^2+1.18^2)^{0.5}$=1.70%.

Exposure Time. The recommended uncertainty of the exposure time is ≤ 5%. The exposure time is measured manually using a stop watch. The measurement uncertainty is defined by the human response time starting and stopping the stop watch at the beginning and end of each exposure. The uncertainty is estimated as ± 1 second. To meet the UVDGM criteria, exposure times should never be shorter than 20 seconds. Exposure times used by GAP are typically greater than 30 seconds. Hence, the uncertainty is estimated to be ≤ 3.33%.

Absorbance Factor. The recommended uncertainty of the absorbance factor is ≤ 5%. The absorbance factor is calculated using:

$$\frac{1 - 10^{-UVAxd}}{UVA \ x \ d \ x \ LN(10)}$$

where UVA is the UV absorbance of the suspension at 254 nm measured using a spectrophotometer. The accuracy of the spectrophotometer measurements is regularly assessed by GAP using potassium dichromate UV absorbance and holmium oxide wavelength UV wavelength standards. At 257 nm, the dichromate standard has a UVA of 0.285 ± 0.0037 cm^{-1}. The spectrophotometer typically measures values of 0.281 to 0.282 cm^{-1}. Thus the true value may be as much as 0.008 cm^{-1} greater than the value indicated by the spectrophotometer. The Holmium standard has a peak at 250.23 ± 0.11 nm. The spectrophotometer typically measures values of 250.4 to 250.6 nm. The wavelength error leads to an error measuring the UVA at 254 nm. That error depends on the slope of the relation between UVA and wavelength at 254 nm, which depends on the UV absorber used during validation. The following table tabulates the errors expected when using LSA as a UV absorber. The calculations assume that the UVA errors are bias errors while the errors with the measured depth are random errors.

UVT at 254 nm	UVA at 254 nm	UVA Error Based on Holmium Scan (cm^{-1})	UVA Error Based on Potassium Dichromate (cm^{-1})	Absorbance Factor without UVA Error	Absorbance Factor with UVA Error	Percentage Error
98 %	0.0087	-0.00002	+0.008	0.9948	0.9902	-0.51 to -0.42 %
90 %	0.0457	-0.00040	+0.008	0.9735	0.9692	-0.58 to -0.30 %
80 %	0.0969	-0.00096	+0.008	0.9450	0.9412	-0.67 to -0.14 %
70 %	0.154	-0.0016	+0.008	0.9141	0.9108	-0.77 to 0.04 %

UV Dose Uncertainty. The UV dose delivered by the collimated beam is calculated using:

$$UV\ Dose = E_S \ x\ P_f \ x\ (1 - R)\ x\ \frac{L}{d + L}\ x\ \frac{1 - 10^{-UVAxd}}{UVA\ x\ d\ x\ LN\ (10)}\ x\ t$$

The uncertainty in the UV dose calculation is the square root of the uncertainties of the individual terms, which is calculated as:

$$U = \sqrt{6.58^2 + 1^2 + 1.7^2 + 0.77^2 + 3.33^2} = 7\%$$

The uncertainty in the UV dose calculation using the recommended uncertainties is:

$$U = \sqrt{8^2 + 5^2 + 1^2 + 5^2 + 5^2} = 12\%$$

Hence, while the estimated uncertainty of the divergence factor does not meet the recommended value in the UVDGM, the UV dose calculation uncertainty for the collimated beam apparatus used by GAP is well within the uncertainty expected based on UVDGM criteria. However, any improvements in the uncertainty will improve the quality of validation. Hence, the following recommendations are made:

1. Use a caliper to measure the Petri dish diameter, confirming the roundness of the dish.
2. Use a caliper to measure the distance from the lamps to the Petri dish surface. Using a caliper should result in a divergence factor uncertainty that meets the UVDGM criteria.
3. Calculate the Petri factor using the UV intensity measured over a two dimensional grid as opposed to across two transects.
4. Use a rare earth wavelength standard with a 253 nm wavelength peak.
5. Develop internal QA/QC criteria for the measured UV dose-response curves. The QA/QC standards should be developed as a 95th percentile prediction interval about the fits to the measured data obtained over time. Use the QA/QC criteria to evaluate each measured UV dose response curve.
6. Conduct comparisons between labs on measured UV dose response.

An important observation with UV validation testing is that UV dose-response curves developed by fitting measured dose-response data do show sample-to-sample variability. That variability may reflect true differences in measured UV dose-response from sample-to-sample or may reflect measurement uncertainty associated with the dose calculation or some other variable. Any actions taken to reduce this variability will results in improved validation testing.

Respectfuly submitted,

CAROLLO ENGINEERS, P.C.

Harold Wright
Associate

Appendix B

UV SENSOR DATA SHEETS

UV-Technik Speziallampen GmbH, Gewerbegebiet Ost 6, 98704 Wolfsberg

Data sheet SUV 20.1 A2 Y2 C (Ö-norm 160°)

General

This sensor is designed to be used in UV disinfection units and is suitable for monitoring of UV dose of UV lamps according Ö-norm. It is designed as a plug in sensor. Sensors of this type are very precise and have a small aging effect. They are calibrated using standards that are based on Physikalisch-Technische Bundesanstalt Braunschweig (PTB).

Technical data

	ÖNORM-Type SUV 20.1 A2 Y2 C
Related standard	M5873-1 (03/2001) for ND-lamps M5873-2 (06/2002) for MD-lamps
Compliance	Type test as measurement system with UVT16 has been done, certificate available.
Labeling	160° IL-M SUV20.1A2Y2C + J-M-lfd. Nr. + MMJJ + 40° + 4-20mA + measurement range in W/m²
Material of sensor body	Stainless steel 1.4404
Geometry	Plug in area ∅ 20 x 59 mm, total length 73 mm, with collar and notch for O-Ring 18,77 x 1,78 *(see drawing)*
Pressure resistance	1 bar short time *(in measuring window FUV38 up to 16 bar pressure resistant)*
Ambient temperature	Ambient temperature: 0 to 60°C (short time 100°C), Storage temperature: -40 to 70°C
Opening angle	160°, see diagram
Measuring / working range	50, 100, 200^1, 500, 1000^2 W/m² according Ö-norm (*^{1} standard value LP, ^{2} standard value MP)*
Calibration uncertainty	≤ ± 1 % compared to Reference radiometer
Selectivity	240 nm to 290 nm
Measuring uncertainty	≤ ± 5 % of end value
Linearity of working range	≤ ± 1 % of end value, see Diagram
Temperature drift	≤ ± 1,5 % in the temperature range 5°C to 35°C, in relation to 20°C
Long time stability / Aging	≤ 1 % / 1000 h related to end value
Recalibration period	24 months
Operating voltage U_B	24 V DC *(min. 12V , max. supply voltage of the used IC is 36 V DC!)*
Operating current	Max. 25 mA
Load resistance	Null up to $R_{Load\ max} = (U_B - 8{,}5\ V) / 0{,}02\ A$ *(R_{Load} = internal resistance of meter or PLC)*
Output signal	4 to 20 mA according to chosen measurement range
Pin assignment	+ U_B pin 1 and 2, I_{out} pin 3 and 4
Accessory cable	Z1G-I 5 m length *(longer cable on request possible),* screwed IP65

Linearity of measuring range

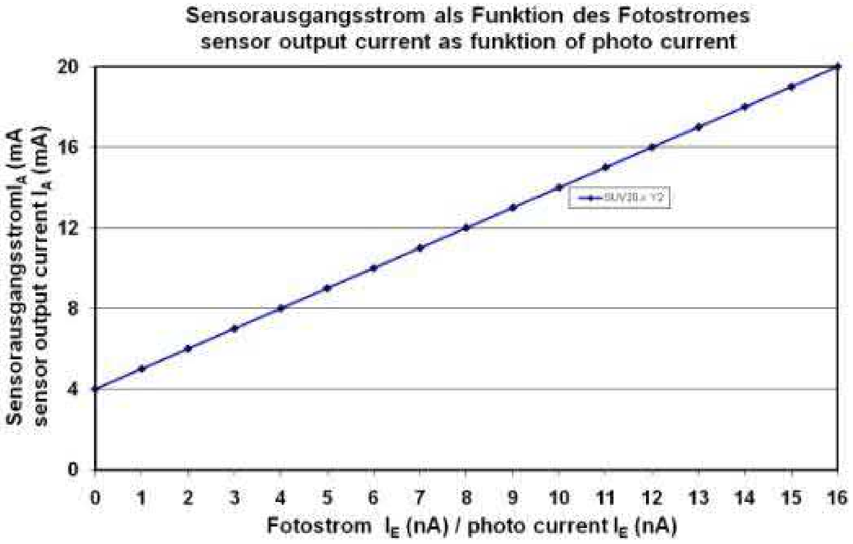

Drawing sensor housing

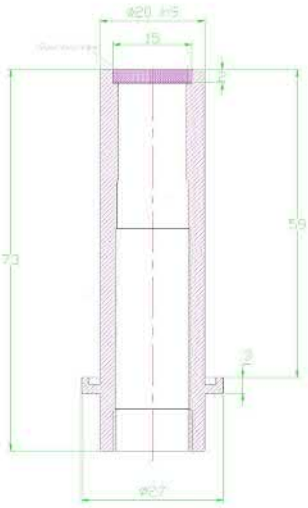

hönle group

KALIBRIERBESCHEINIGUNG FÜR UV-SENSOR
CERTIFICATE OF CALIBRATION FOR UV-SENSOR

UV-Sensortyp
UV Sensor type — **SUV 20.1 A2 Y2 C**

Artikel-Nummer:
Article number: — **301 00519 0000**

Serien-Nummer:
Serial number: — **D8 126**

Kalibrierung:
Calibration: — **300 W/m² = 20 mA**

Kalibrierung gemäß den Werten der Referenzsensoren R9 001 und R9 004.
Verified according the values of the golden probes R9 001 and R9 004.

Geprüft an:
Verified with:

- **UV-Niederdruckstrahler** ☐
  UV low pressure lamp
- **UV-Mitteldruckstrahler** ☒
  UV medium pressure lamp

Kalibrierdatum (Monat/Jahr)
Date of calibration (month/year) — **08/18**

Rekalibrierung empfohlen nach (Betriebzeit)
Re-calibration recommended after (operating time) — **12 Monaten**
12 month

Hiermit bestätigen wir die Übereinstimmung des Produkts mit den genannten Angaben.
Herewith we certify the compilance of the product with the mentioned data.

Wümbach, 14.08.2018

steffen müller
Produktmanager / product manager

uv-technik
Speziallampen

UV-Technik
Speziallampen GmbH
Gewerbegebiet Ost 6
D-98704 Ilmenau OT Wümbach

Tel: +49-(0)36785-520-0
Fax: +49-(0)36785-520-21

e-mail: info@uvtechnik.com
www.uvtechnik.com

hönle group

KALIBRIERBESCHEINIGUNG FÜR UV-SENSOR
CERTIFICATE OF CALIBRATION FOR UV-SENSOR

UV-Sensortyp *UV Sensor type*	**SUV 20.1 A2 Y2 C**
Artikel-Nummer: *Article number:*	**301 00525 0000**
Serien-Nummer: *Serial number:*	**YN 109**
Kalibrierung: *Calibration:*	**150 W/m² = 20 mA**

Kalibrierung gemäß den Werten der Referenzsensoren R9 001 und R9 004.
Verified according the values of the golden probes R9 001 and R9 004.

Geprüft an:
Verified with:

UV-Niederdruckstrahler *UV low pressure lamp*	☐
UV-Mitteldruckstrahler *UV medium pressure lamp*	☒

Kalibrierdatum (Monat/Jahr) *Date of calibration (month/year)*	**11/18**
Rekalibrierung empfohlen nach (Betriebzeit) *Re-calibration recommended after (operating time)*	**12 Monaten** **12 month**

Hiermit bestätigen wir die Übereinstimmung des Produkts mit den genannten Angaben.
Herewith we certify the compilance of the product with the mentioned data.

Ilmenau / OT Wümbach, 02.11.2018

Steffen Müller
Produktmanager / product manager

uv-technik
Speziallampen

UV-Technik
Speziallampen GmbH
Gewerbegebiet Ost 6
D-98704 Ilmenau/ OT Wümbach

Tel: +49-(0)36785-520-0
Fax: +49-(0)36785-520-21

e-mail: info@uvtechnik.com
www.uvtechnik.com

hönle group

KALIBRIERBESCHEINIGUNG FÜR UV-SENSOR
CERTIFICATE OF CALIBRATION FOR UV-SENSOR

UV-Sensortyp *UV Sensor type*	SUV 20.1 A2 Y2 C
Artikel-Nummer: *Article number:*	301 00519 0000
Serien-Nummer: *Serial number:*	D9 076
Kalibrierung: *Calibration:*	300 W/m² = 20 mA

Kalibrierung gemäß den Werten der Referenzsensoren R9 001 und R9 004.
Verified according the values of the golden probes R9 001 and R9 004.

Geprüft an:
Verified with:

UV-Niederdruckstrahler *UV low pressure lamp*	☐
UV-Mitteldruckstrahler *UV medium pressure lamp*	☒
Kalibrierdatum (Monat/Jahr) *Date of calibration (month/year)*	09/18
Rekalibrierung empfohlen nach (Betriebzeit) *Re-calibration recommended after (operating time)*	12 Monaten 12 month

Hiermit bestätigen wir die Übereinstimmung des Produkts mit den genannten Angaben.
Herewith we certify the compilance of the product with the mentioned data.

Wümbach, 05.09.2018

Steffen Müller
Produktmanager / product manager

uv-technik
Speziallampen

UV-Technik
Speziallampen GmbH
Gewerbegebiet Ost 6
D-98704 Ilmenau OT Wümbach

Tel: +49-(0)36785-520-0
Fax: +49-(0)36785-520-21

e-mail: info@uvtechnik.com
www.uvtechnik.com

hönle group

KALIBRIERBESCHEINIGUNG FÜR UV-SENSOR
CERTIFICATE OF CALIBRATION FOR UV-SENSOR

UV-Sensortyp *UV Sensor type*	SUV 20.1 A2 Y2 C
Artikel-Nummer: *Article number:*	301 00519 0000
Serien-Nummer: *Serial number:*	D9 080
Kalibrierung: *Calibration:*	300 W/m² = 20 mA

Kalibrierung gemäß den Werten der Referenzsensoren R9 001 und R9 004.
Verified according the values of the golden probes R9 001 and R9 004.

Geprüft an:
Verified with:

UV-Niederdruckstrahler *UV low pressure lamp*	☐
UV-Mitteldruckstrahler *UV medium pressure lamp*	X

Kalibrierdatum (Monat/Jahr) *Date of calibration (month/year)*	09/18
Rekalibrierung empfohlen nach (Betriebzeit) *Re-calibration recommended after (operating time)*	12 Monaten 12 month

Hiermit bestätigen wir die Übereinstimmung des Produkts mit den genannten Angaben.
Herewith we certify the compilance of the product with the mentioned data.

Wümbach, 05.09.2018

steffen müller
Produktmanager / product manager

uv-technik
Speziallampen

UV-Technik
Speziallampen GmbH
Gewerbegebiet Ost 6
D-98704 Ilmenau OT Wümbach

Tel: +49-(0)36785-520-0
Fax: +49-(0)36785-520-21

e-mail: info@uvtechnik.com
www.uvtechnik.com

hönle group

uv-technik
Speziallampen

KALIBRIERBESCHEINIGUNG FÜR UV-SENSOR
CERTIFICATE OF CALIBRATION FOR UV-SENSOR

UV-Sensortyp *UV Sensor type*	SUV 20.1 A2 Y2 C
Artikel-Nummer: *Article number:*	301 00525 0000
Serien-Nummer: *Serial number:*	X4 034
Kalibrierung: *Calibration:*	150 W/m² = 20 mA

Kalibrierung gemäß den Werten der Referenzsensoren R9 001 und R9 004.
Verified according the values of the golden probes R9 001 and R9 004.

Geprüft an:
Verified with:

UV-Niederdruckstrahler *UV low pressure lamp*	
UV-Mitteldruckstrahler *UV medium pressure lamp*	X

Kalibrierdatum (Monat/Jahr) *Date of calibration (month/year)*	11/18
Rekalibrierung empfohlen nach (Betriebzeit) *Re-calibration recommended after (operating time)*	12 Monaten 12 month

Hiermit bestätigen wir die Übereinstimmung des Produkts mit den genannten Angaben.
Herewith we certify the compilance of the product with the mentioned data.

Ilmenau / OT Wümbach, 02.11.2018

steffen müller
Produktmanager / product manager

UV-Technik
Speziallampen GmbH
Gewerbegebiet Ost 6
D-98704 Ilmenau/ OT Wümbach

Tel: +49-(0)36785-520-0
Fax: +49-(0)36785-520-21

e-mail: info@uvtechnik.com
www.uvtechnik.com

hönle group

uv-technik
Speziallampen

UV-Technik
Speziallampen GmbH
Gewerbegebiet Ost 6
D-98704 Ilmenau/ OT Wümbach

Tel: +49-(0)36785-520-0
Fax: +49-(0)36785-520-21

e-mail: info@uvtechnik.com
www.uvtechnik.com

KALIBRIERBESCHEINIGUNG FÜR UV-SENSOR
CERTIFICATE OF CALIBRATION FOR UV-SENSOR

UV-Sensortyp *UV Sensor type*	**SUV 20.1 A2 Y2 C**
Artikel-Nummer: *Article number:*	**301 00525 0000**
Serien-Nummer: *Serial number:*	**XD 062**
Kalibrierung: *Calibration:*	**150 W/m² = 20 mA**

Kalibrierung gemäß den Werten der Referenzsensoren R9 001 und R9 004.
Verified according the values of the golden probes R9 001 and R9 004.

Geprüft an:
Verified with:

UV-Niederdruckstrahler *UV low pressure lamp*	☐
UV-Mitteldruckstrahler *UV medium pressure lamp*	**X**

Kalibrierdatum (Monat/Jahr) *Date of calibration (month/year)*	**11/18**
Rekalibrierung empfohlen nach (Betriebzeit) *Re-calibration recommended after (operating time)*	**12 Monaten** **12 month**

Hiermit bestätigen wir die Übereinstimmung des Produkts mit den genannten Angaben.
Herewith we certify the compilance of the product with the mentioned data.

Ilmenau / OT Wümbach, 02.11.2018

steffen müller
Produktmanager / product manager

hönle group

KALIBRIERBESCHEINIGUNG FÜR UV-SENSOR
CERTIFICATE OF CALIBRATION FOR UV-SENSOR

UV-Sensortyp *UV Sensor type*	**SUV 20.1 A2 Y2 C**
Artikel-Nummer: *Article number:*	**301 00519 0000**
Serien-Nummer: *Serial number:*	**D8 117**
Kalibrierung: *Calibration:*	**300 W/m² = 20 mA**

Kalibrierung gemäß den Werten der Referenzsensoren R9 001 und R9 004.
Verified according the values of the golden probes R9 001 and R9 004.

Geprüft an:
Verified with:

UV-Niederdruckstrahler *UV low pressure lamp*	☐
UV-Mitteldruckstrahler *UV medium pressure lamp*	**X**

Kalibrierdatum (Monat/Jahr) *Date of calibration (month/year)*	**08/18**
Rekalibrierung empfohlen nach (Betriebzeit) *Re-calibration recommended after (operating time)*	**12 Monaten** **12 month**

Hiermit bestätigen wir die Übereinstimmung des Produkts mit den genannten Angaben.
Herewith we certify the compilance of the product with the mentioned data.

Wümbach, 14.08.2018

steffen müller
Produktmanager / product manager

uv-technik
Speziallampen

UV-Technik
Speziallampen GmbH
Gewerbegebiet Ost 6
D-98704 Ilmenau OT Wümbach

Tel: +49-(0)36785-520-0
Fax: +49-(0)36785-520-21

e-mail: info@uvtechnik.com
www.uvtechnik.com

hönle group

uv-technik
Speziallampen

UV-Technik
Speziallampen GmbH
Gewerbegebiet Ost 6
D-98704 Ilmenau OT Wümbach

Tel: +49-(0)36785-520-0
Fax: +49-(0)36785-520-21

e-mail: info@uvtechnik.com
www.uvtechnik.com

KALIBRIERBESCHEINIGUNG FÜR UV-SENSOR
CERTIFICATE OF CALIBRATION FOR UV-SENSOR

UV-Sensortyp *UV Sensor type*	**SUV 20.1 A2 Y2 C**
Artikel-Nummer: *Article number:*	**301 00519 0000**
Serien-Nummer: *Serial number:*	**D8 125**
Kalibrierung: *Calibration:*	**300 W/m² = 20 mA**

Kalibrierung gemäß den Werten der Referenzsensoren R9 001 und R9 004.
Verified according the values of the golden probes R9 001 and R9 004.

Geprüft an:
Verified with:

UV-Niederdruckstrahler *UV low pressure lamp*	☐
UV-Mitteldruckstrahler *UV medium pressure lamp*	☒

Kalibrierdatum (Monat/Jahr) *Date of calibration (month/year)*	**08/18**
Rekalibrierung empfohlen nach (Betriebzeit) *Re-calibration recommended after (operating time)*	**12 Monaten** **12 month**

Hiermit bestätigen wir die Übereinstimmung des Produkts mit den genannten Angaben.
Herewith we certify the compilance of the product with the mentioned data.

Wümbach, 14.08.2018

steffen müller
Produktmanager / product manager

hönle group

uv-technik
Speziallampen

UV-Technik
Speziallampen GmbH
Gewerbegebiet Ost 6
D-98704 Ilmenau OT Wümbach

Tel: +49-(0)36785-520-0
Fax: +49-(0)36785-520-21

e-mail: info@uvtechnik.com
www.uvtechnik.com

KALIBRIERBESCHEINIGUNG FÜR UV-SENSOR
CERTIFICATE OF CALIBRATION FOR UV-SENSOR

UV-Sensortyp *UV Sensor type*	SUV 20.1 A2 Y2 C
Artikel-Nummer: *Article number:*	301 00519 0000
Serien-Nummer: *Serial number:*	D8 124
Kalibrierung: *Calibration:*	300 W/m² = 20 mA

Kalibrierung gemäß den Werten der Referenzsensoren R9 001 und R9 004.
Verified according the values of the golden probes R9 001 and R9 004.

Geprüft an:
Verified with:

UV-Niederdruckstrahler *UV low pressure lamp*	☐
UV-Mitteldruckstrahler *UV medium pressure lamp*	X

Kalibrierdatum (Monat/Jahr) *Date of calibration (month/year)*	08/18
Rekalibrierung empfohlen nach (Betriebzeit) *Re-calibration recommended after (operating time)*	12 Monaten 12 month

Hiermit bestätigen wir die Übereinstimmung des Produkts mit den genannten Angaben.
Herewith we certify the compilance of the product with the mentioned data.

Wümbach, 14.08.2018

Steffen Müller
Produktmanager / product manager

KALIBRIERBESCHEINIGUNG FÜR UV-SENSOR
CERTIFICATE OF CALIBRATION FOR UV-SENSOR

UV-Sensortyp *UV Sensor type*	**SUV 20.1 A2 Y2 C**
Artikel-Nummer: *Article number:*	**301 00525 0000**
Serien-Nummer: *Serial number:*	**YN 106**
Kalibrierung: *Calibration:*	**150 W/m² = 20 mA**

Kalibrierung gemäß den Werten der Referenzsensoren R9 001 und R9 004.
Verified according the values of the golden probes R9 001 and R9 004.

Geprüft an:
Verified with:

UV-Niederdruckstrahler *UV low pressure lamp*	☐
UV-Mitteldruckstrahler *UV medium pressure lamp*	☒

Kalibrierdatum (Monat/Jahr) *Date of calibration (month/year)*	**11/18**
Rekalibrierung empfohlen nach (Betriebzeit) *Re-calibration recommended after (operating time)*	**12 Monaten** **12 month**

Hiermit bestätigen wir die Übereinstimmung des Produkts mit den genannten Angaben.
Herewith we certify the compilance of the product with the mentioned data.

Ilmenau / OT Wümbach, 02.11.2018

steffen müller
Produktmanager / product manager

UV-Technik
Speziallampen GmbH
Gewerbegebiet Ost 6
D-98704 Ilmenau/ OT Wümbach

Tel: +49-(0)36785-520-0
Fax: +49-(0)36785-520-21

e-mail: info@uvtechnik.com
www.uvtechnik.com

hönle group

uv-technik
Speziallampen

UV-Technik
Speziallampen GmbH
Gewerbegebiet Ost 6
D-98704 Ilmenau/ OT Wümbach

Tel: +49-(0)36785-520-0
Fax: +49-(0)36785-520-21

e-mail: info@uvtechnik.com
www.uvtechnik.com

KALIBRIERBESCHEINIGUNG FÜR UV-SENSOR
CERTIFICATE OF CALIBRATION FOR UV-SENSOR

UV-Sensortyp
UV Sensor type SUV 20.1 A2 Y2 C

Artikel-Nummer:
Article number: 301 00525 0000

Serien-Nummer:
Serial number: X7 142

Kalibrierung:
Calibration: 150 W/m² = 20 mA

Kalibrierung gemäß den Werten der Referenzsensoren R9 001 und R9 004.
Verified according the values of the golden probes R9 001 and R9 004.

Geprüft an:
Verified with:

UV-Niederdruckstrahler
UV low pressure lamp ☐

UV-Mitteldruckstrahler
UV medium pressure lamp X

Kalibrierdatum (Monat/Jahr)
Date of calibration (month/year) 11/18

Rekalibrierung empfohlen nach (Betriebzeit)
Re-calibration recommended after (operating time) 12 Monaten
12 month

Hiermit bestätigen wir die Übereinstimmung des Produkts mit den genannten Angaben.
Herewith we certify the compilance of the product with the mentioned data.

Ilmenau / OT Wümbach, 02.11.2018

steffen müller
Produktmanager / product manager

hönle group

uv-technik
Speziallampen

UV-Technik
Speziallampen GmbH
Gewerbegebiet Ost 6
D-98704 Ilmenau/ OT Wümbach

Tel: +49-(0)36785-520-0
Fax: +49-(0)36785-520-21

e-mail: info@uvtechnik.com
www.uvtechnik.com

KALIBRIERBESCHEINIGUNG FÜR UV-SENSOR
CERTIFICATE OF CALIBRATION FOR UV-SENSOR

UV-Sensortyp
UV Sensor type **SUV 20.1 A2 Y2 C**

Artikel-Nummer:
Article number: **301 00525 0000**

Serien-Nummer:
Serial number: **ZO 033**

Kalibrierung:
Calibration: **150 W/m² = 20 mA**

Kalibrierung gemäß den Werten der Referenzsensoren R9 001 und R9 004.
Verified according the values of the golden probes R9 001 and R9 004.

Geprüft an:
Verified with:

UV-Niederdruckstrahler ☐
UV low pressure lamp

UV-Mitteldruckstrahler ☒
UV medium pressure lamp

Kalibrierdatum (Monat/Jahr)
Date of calibration (month/year) **11/18**

Rekalibrierung empfohlen nach (Betriebzeit) **12 Monaten**
Re-calibration recommended after (operating time) **12 month**

Hiermit bestätigen wir die Übereinstimmung des Produkts mit den genannten Angaben.
Herewith we certify the compilance of the product with the mentioned data.

Ilmenau / OT Wümbach, 02.11.2018

steffen müller
Produktmanager / product manager

Appendix C

ACCREDITATION CERTIFICATES AND MICROBIAL ANALYSIS METHODS

Joint IAF-ILAC-ISO Communiqué
on the
Management Systems Requirements of ISO/IEC 17025:2005, General requirements for the competence of testing and calibration laboratories

A laboratory's fulfilment of the requirements of ISO/IEC 17025:2005 means the laboratory meets both the technical competence requirements and **management system requirements** that are necessary for it to consistently deliver technically valid test results and calibrations. The **management system requirements** in ISO/IEC 17025:2005 (Section 4) are written in language relevant to laboratory operations and meet the principles of ISO 9001:2008 **Quality Management Systems — Requirements** and are aligned with its pertinent requirements.

Rob Steele

IAF Chair

ILAC Chair

ISO Secretary General

January 2009

Canadian Association for Laboratory Accreditation Inc.

CALA

Certificate of Accreditation

GAP EnviroMicrobial Services Ltd.
14-1020 Hargrieve Rd.
London, Ontario

This laboratory is accredited in accordance with the recognized International Standard ISO/IEC 17025:2005. This accreditation demonstrates technical competence for a defined scope and the operation of a laboratory quality management system (refer to joint ISO-ILAC-IAF Communiqué dated 8 January 2009).

Accreditation No.: A2914
Issued On: November 10, 2015
Accreditation Date: January 3, 2005
Expiry Date: May 10, 2018

President & CEO

ilac-MRA CALA

This certificate is the property of the Canadian Association for Laboratory Accreditation Inc. and must be returned on request; reproduction must follow policy in place at date of issue. For the specific tests to which this accreditation applies, please refer to the laboratory's scope of accreditation at www.cala.ca

CALA Directory of Laboratories

Login
Member: ☐
Password: ☐
Login

Home | List All | Search Accreditation Directory

Membership Number: 2914
Laboratory Name: **GAP EnviroMicrobial Services Ltd.**
Parent Institution:
Address: 14-1020 Hargrieve Rd. London, Ontario N6E 1P5
Contact: Ms. Jessica Shaw
Phone: (519) 681-0571
Fax: (519) 681-7150
Email: jshaw@gaplab.com

Standard: Conforms with requirements of ISO/IEC 17025
Clients Served: All Interested Parties
Revised On: October 17, 2011
Valid To: April 17, 2014

Showing Accreditation Directory

Scope of Accreditation

Search Criteria - results highlighted in yellow
Laboratory Name contains ""

Water (Microbiology)
Bacteriophages Effluent - Water (005)
BACTPHAGE - 0001 modified from SM 9224 C AND ISO 10705-1:1995 (E)
  POUR PLATE
  Bacteriophages (MS2)
  Bacteriophages (PhiX-174)
  Bacteriophages (Q-Beta)
  Bacteriophages (T1UV)
  Bacteriophages (T7)
Water (Microbiology)
Escherichia coli (E. coli) - Water (008)
ECMF-0001 modified from MOE METHOD # MFMICRO/E3371, 1999 AND MOE METHOD QWPA-E3226 (2004)
  MEMBRANE FILTRATION (mFC-BCIG)
  Escherichia coli (E. coli)
Water (Microbiology)
Fecal (Thermotolerant) Coliforms - Water (013)
FCMF-0001 modified from SM 21ST ED. 9222 D
  MEMBRANE FILTRATION (mFC)
  Fecal (Thermotolerant) Coliforms
Water (Microbiology)
Legionella - Water (006)
LEG-0001 modified from AS/NZS 3896:1998 and SM 9260 J
  CONCENTRATE/DIRECT PLATE
  Legionella
Water (Microbiology)
Legionella - Water (014)
LEGPA-0001 IN HOUSE METHOD
  P/A - PCR
  Legionella
Water (Microbiology)
Total Coliforms - Water (001)
TCMF-0001 modified from MOE METHOD MFMICRO-E3371, 1999 AND MOE METHOD QWPA-E3226 (2004)
  MEMBRANE FILTRATION (mENDO)
  Background Count
  Total Coliforms

GAP EnviroMicrobial Services Ltd.

APPROVAL FORM FOR RELEASE OF
ANALYTICAL METHOD FOR ROUTINE USE

METHOD TITLE

QUANTITATIVE RECOVERY OF BACTERIOPHAGE USED FOR DISINFECTION EQUIPMENT VALIDATION

METHOD CODE: BACTPHAGE-0001
COMPUTER FILE NAME: BACTPHAGEREV35
DATE OF REVISION: REVISION 35, July 5, 2017
PAGES IN DOCUMENT: 32

QUALITY MANAGER

APPROVAL: J. Patterson **DATE:** July 13, 2017

LABORATORY / TECHNICAL MANAGER

APPROVAL: S. Verhoeven **DATE:** July 5, 2017

DATE REVIEWED:

- **The approval of this document is valid for one year at which time it will be subject to review to determine if any updates or modifications are warranted.**

TABLE OF CONTENTS

QUANTITATIVE RECOVERY OF BACTERIOPHAGE USED FOR DISINFECTION EQUIPMENT VALIDATION

1.0 INTRODUCTION

This method describes a pour plate process with a single layer of agar (single layer plating technique) for enumerating bacteriophage.

A bacteriophage (phage) is a type of virus that infects bacteria. Phage that infect *Escherichia coli* are called coliphage, and this group is comprised of a number of different phage types including MS2, Phi X174, Q-Beta, R-17, T-7, T-1, PRD-1 and T1UV bacteriophage. MS2, Q-Beta and R-17 are known as male specific (F^+) bacteriophage because they infect cells by attaching to the F-pilus of male strains of *E. coli. E. coli* produce these pili for the exchange of genetic information during conjugation. There is another group of bacteriophage called somatic bacteriophage including T7, T1, PhiX-174 and T1UV. Somatic bacteriophage are DNA viruses that infect host cells via the outer cell membrane.

Manufacturers of UV reactors and/or the parties purchasing the reactors may require that multiple challenge organisms with various dose-response rates be evaluated to fully characterize the UV reactor.

In a typical experiment, a pure culture(s) of bacteriophage is passed through a disinfection unit, and the phage is enumerated in samples of influent and effluent water. The log reduction in bacteriophage concentration is calculated, and is used to determine the bacteriophage reduction efficacy of the unit. For UV experiments, influent water containing bacteriophage is also submitted for collimated beam analysis (SOP# 53). This allows for the creation of a dose response standard curve that can be used with the experimental log reduction value to calculate the applied dose of the disinfection unit.

2.0 SUMMARY OF METHOD

The method can be used to determine bacteriophage concentrations in inoculum stocks, in water samples taken when testing water disinfection systems, and in water samples from collimated beam analysis. However, this method only applies to analysis whereby known concentrations of laboratory harvested bacteriophage inoculum have been seeded and utilized in the form of a disinfection bioassay. This method is not intended for use in the isolation, identification and quantification of unseeded bacteriophage in various matrices such as water, wastewater, biosolid, etc.

The analysis uses various *Escherichia coli* host strains for the various bacteriophage (Table 1), and a single layer plating technique. One mL of *E. coli* broth culture is added to a culture tube containing 20 mL of molten Tryptone Yeast Extract Glucose agar (TYGA) containing triphenyl tetrazolium chloride (TTC). An appropriate volume of sample containing bacteriophage is then added to the same tube.

Alternatively, one mL of *E. coli* broth culture is added to a culture tube containing 10 mL of 2X TGYA with TTC and 10 mL of sample containing bacteriophage is added to the same tube.

After mixing gently by inversion, the molten agar containing *E. coli* and sample is poured into a sterile Petri dish. The molten agar is allowed to solidify, and the plates are incubated at 35 ± 0.5°C for 18 to 24 hours.

The plates are examined for clear, roundish zones (plaques), which indicate that the phage have lysed the *E. coli* bacterial cells.

The number of plaques per plate is recorded, and multiplied by the dilution factor. Final results are reported as plaque forming units (PFU) per millilitre (mL) of original sample.

Table 1. Summary of bacteriophage and corresponding primary *E. coli* hosts. GAP Stock number in brackets () indicates previous stock number which is still present in the collection but no longer used.

Bacteriophage Name	**Bacteriophage**			***E. coli***		
	Classification	GAP QC Stock No	ATCC No.	*E. coli* Host Name	ATCC No.	GAP QC Stock No.
MS2	F+ male specific	103	15597-B1	(pFamp)R	700891	285 (201)
Q-Beta	F+ male specific	204	23631-B1	(pFamp)R	700891	285 (201)
T7	Somatic	262	BAA-1025-B2	*E. coli* B or *E. coli* CN13	11303 700609	232 280 (199)
T1	Somatic	234	11303-B1	*E. coli* B	11303	232
PhiX174	Somatic	174	13706-B1	*E. coli* CN13	700609	280 (199)
T1UV	Somatic	235	HER 468*	*E. coli* CN13	700609	280 (199)

***This culture is not available from ATCC, but can be purchased from the Félix d'Hérelle Reference Center for Bacterial Viruses culture collection at the University of Laval**

3.0 PRINCIPLE OF METHOD

F-specific bacteriophages attach to the F-pilus of *E. coli* strains, and therefore will only infect strains that contain an F-factor, such as (pFamp) R or Hfr derivatives of *E. coli* K12. The other group of bacteriophage are known as somatic bacteriophage, and they infect bacteria via the cell membrane. This method is based upon the principle that bacteriophage will infect and multiply in a susceptible *E. coli* host, and eventually lyse (break apart) the cell. The released bacteriophage will subsequently infect and lyse surrounding *E. coli* cells. When bacteriophage and *E. coli* are mixed in agar, the bacteriophage will infect and produce an area of lysed *E. coli* cells that appear as clear zones (plaques). The plaques can be easily seen when surrounded by the dense growth of intact (uninfected) *E. coli* cells (see Appendix III, Figure 1).

Triphenyl Tetrazolium Chloride (TTC) is a redox indicator that turns red when bacteria use oxygen during growth. Addition of TTC to the agar results in a red colour produced by the background growth of uninfected cells. This colour production helps with plaque resolution in the agar.

3.1 Relationship to other Methods

Two different methods are available for bacteriophage enumeration, the single layer and the double layer plating method. Method BACTPHAGE-0001 uses the single layer method. The single layer technique is described in Standard Methods for the Examination of Water and Wastewater (American Public Health Association, 2012 – 9224E, Detection of Coliphages, Single-Agar-Layer Method). Similarly, the US EPA Method 1602 (US EPA, 2001) and ISO 10705-1 “Detection and enumeration of bacteriophage – enumeration of F-specific RNA bacteriophages” use a single layer agar method for the enumeration of male-specific and somatic bacteriophage with US EPA Method 1602 being one of two methods the National Water Research Institutes Ultraviolet Disinfection Guidelines suggests for enumeration of MS2 from UV biodosimetry samples.

GAP Method BACTPHAGE-0001 uses TYG broth (TYGB) and TYG agar (TYGA) formulations modified from the Standard Methods 9224E. They are also the growth media used by Havelaar and Hogeboom (1984). An exception is that GAP EnviroMicrobial Services uses a higher agar concentration to produce more defined plaques (1.0% compared to 0.6%) and has added 2,3,5-triphenyl tetrazolium chloride to the TYGA to enhance plaque resolution. The higher agar concentration does not affect the measured difference between influent and effluent plaque counts but allows the plates to set more quickly and produces smaller plaque clearing zones that is important to allow a larger counting range with somatic coliphage. The addition of tetrazolium dyes at the concentration used in Method BACTPHAGE-0001 has previously been shown to have no effect on MS2 plaque assay titre (Hurst *et al.*, 1994). GAP EnviroMicrobial Services has found similar results with other bacteriophage as well.

GAP Method BACTPHAGE-0001 does not employ an RNase control as outlined in SM 9224E.4j when analysing F-specific coliphage as all samples are spiked with a known coliphage by the client and in any case where both F-specific and somatic coliphage are added to a single sample, only coliphage that show no host cross-reactions are used.

GAP Method BACTPHAGE-0001 uses the F-specific and somatic hosts *E. coli* Famp (ATCC 700891) and *E. coli* CN13 (ATCC 700609) described in Standard Methods 9224E for MS2 and Q-beta (F-specific) and T7, Phi-X and T1UV (somatic) but employs an *E. coli* B (ATCC 11303) host for T1 bacteriophage as suggested by ATCC. The NWRI Ultraviolet Disinfection Guidelines 3rd Edition (NWRI, 2012) also recommends using MS2 bacteriophage ATCC 15597-B1 with the host strain *E. coli* ATCC 15597 (SOP#40). However, the UV industry is interested in several other bacteriophages that have different dose-response characteristics to UV, such as Q-beta, T1, T7, PhiX-174 and T1UV phages which require the use of alternate host strains of *E. coli* as described above.

4.0 PARAMETERS MEASURED

MS2, Q-beta, T1, T7, PhiX-174 and T1UV bacteriophage.

5.0 SAMPLE MATRICES

This method can be used to determine bacteriophage concentrations in inoculum stocks and in water as part of treatment validation studies (biodosimetry). This includes influent and effluent samples taken when testing disinfection systems, and in samples from collimated beam analysis.

It has not been tested for use in the enumeration of bacteriophage from environmental samples such as surface water, groundwater or wastewater.

6.0 SAMPLE REQUIREMENTS

Samples of water that contain bacteriophage shall be collected in sterile plastic containers. See **SOP#21 Quality Control Procedure for Glassware and Plastic Bottles** regarding verification of each lot of new, certified bottles. Typically, experiments using any of the bacteriophage should be performed in water without chlorine, and these samples can be collected in bottles that do or do not contain sodium thiosulfate. If the water is known to contain chlorine, the sample must be collected in a sample bottle containing sufficient sodium thiosulfate to give a final concentration of 100 mg/litre of sample. If a collimated beam test is to be performed (SOP 53) then samples must be collected without sodium thiosulphate, and therefore water must be free of chlorine.

Sample volumes typically range from 10 mL to 100 mL, depending on the experimental requirements with collimated beam samples being collected in volumes ranging from 500 mL to 4 L. Samples must be stored at 4°C, but not frozen. Samples must be shipped in a cooler with sufficient ice to ensure the samples remain cool, but not frozen, during transport to arrive at 0 to 15°C (SOP#17 & SOP#54).

Samples must be shipped to the laboratory as soon as possible after collection, and preferably on the same day. It is recommended that the time between sample collection and analysis is no more than 30 hours, please see Section 6.1, Contingencies below.

6.1 Contingencies

Analysis is initiated within 30 hours of sample collection. The Ministry of Environment Water Initiatives, Technical Brief (November 2000), allows a 48 hour holding time between sampling and analysis. Therefore, a maximum of 48 hours will be permitted between sampling and analysis in the event that delays occur due to transportation difficulties. Stability testing can be performed on a particular sample submission to extend the hold time of a given batch of samples beyond the hold time typically observed of 48 hours. See Section 8.6for stability testing procedures.

As per **SOP#24, Sample Traceability, Documentation, and Validation**, the login analyst checks for samples that may be frozen, warm, older than 48 hours, in cracked or broken bottles, contaminated or undocumented. Requested tests can be excluded from analysis or the sample may not be analyzed, if the sample age exceeds the acceptable criteria, or if the sample has been collected, transported, or otherwise submitted improperly.

The analysis of a repeat sample however, for time periods exceeding 48 hours if requested by a client or is required to obtain reliable results. The sample types analyzed using this method cannot be re-sampled in the field for a number of reasons including cost, the number of “runs” completed during a day being impractical to repeat, and short time periods set aside by clients for testing. Repeat analysis past 48 hours should only be completed if stability of the measured log reductions of the samples can be verified for a given water type and time period (see Section 8.6).

7.0 SHORTCOMINGS

7.1 Interferences

The sample and host bacteria must not be in contact for longer than 10 minutes before the agar is poured. This will prevent phage replication before the agar has solidified (US EPA, 2001).

Every effort must be made to ensure that the preparation and enumeration of concentrated phage stocks is separated by time and space from the enumeration of low titre environmental or study samples. Media room equipment, including the automatic pipetter, must never be used for sample analysis. All of these precautions must be taken to ensure that cross contamination does not occur within the lab. Section 8.4 describes laboratory practices to ensure that cross-contamination does not occur.

7.2 Biases

If an insufficient number of replicates of a bacteriophage are not produced inside a cell during the replication phase, a plaque will not necessarily form (Kutter et al 2005).

If two bacteriophage deposit themselves in close proximity to one another in the agar, only a single plaque will form. This causes a systematic under-estimation of target bacteriophage counts. Phage levels are thus reported as plaque forming units (PFU) per unit volume.

7.3 Limitations

This method is used to validate UV reactors, not for the enumeration of bacteriophage in the environment.

8.0 ANALYTICAL PROCESSING

8.1 Culture Media/Solutions/Reagents

See **Appendix I** and the Media Recipes binder. All media batch numbers are to be recorded in GAP Bench sheets (GAP-F-7).

8.2 Preparation of Concentrated Bacteriophage

This is proprietary information. GAP analysts should refer to **SOP#40, Preparation of Concentrated Bacteriophage Stocks**, for this information.

8.3 Preparation for Phage Analysis

Table 2. Summary of acceptable counting ranges for each bacteriophage and their primary hosts

Bacteriophage Stock cultures	Host *E. coli*	Acceptable Counting Range (pfu/plate)	Ideal Counting Range (pfu/mL)
MS2	*E. coli* HS (pFamp)R	20-300	50-200
Q-Beta	*E. coli* HS(pFamp)R	20-200	50-200
T7	*E. coli* B	15-150	20-80
T1	*E. coli* B	20-300	50-150
PhiX174	*E. coli* CN13	10-150	20-60
T1UV	*E. coli* CN13	20-300	50-150

Maintenance of *E. coli* hosts and bacteriophage stock cultures are described in **Appendix II**. **SOP#37, Culture Collection Maintenance** details the preparation and maintenance of all cultures used for Quality Control and **SOP#40, Preparation of Concentrated Bacteriophage Stocks** details the preparation of bacteriophage stock cultures.

8.3.1 Setting up *E. coli* host cultures

The day before any bacteriophage analysis, inoculate the appropriate *E. coli* host from a working stock culture plate into 50 mL of Tryptone Yeast Extract Glucose Broth (TYGB), and incubate the broth for 18 to 24 hours at 35 ± 0.5°C without shaking. Label each 50 mL bottle with a unique QC sample number.

Each host culture bottle is given a separate QC sample number, and listed on the bench results form. Positive and negative control results for each host bottle (Section 8.4.3) are read using the Sorcerer colony counting system (SOP 108) and the printouts are filed with the QC Bench sheets.

50 mL of host E. coli broth culture will provide a sufficient volume for inoculating about 46 tubes of TYGA. Additional 50 mL broth cultures of E. coli may be required, depending upon the number of samples and dilutions to be analyzed.

Six-hour host broth cultures may also be used if 18-24hr cultures are not available. ISO Mod TYGB bottles must be pre-warmed to room temperature prior to inoculation with working stock culture plates and incubate for at least 6 hours at 35 ± 0.5°C.

8.3.2 Melting TYGA tubes

Prior to analysis, melt the required number of TYG agar (TYGA) tubes by placing the tubes in a beaker containing boiling water until the agar has liquefied. Special precautions should be taken to make sure the agar is completely melted. *Failure to do so will cause chunks to form in the agar, making enumeration impossible the next day. Repeat analysis will then be required, which is not ideal.*

After TYGA is melted, place the tubes in a water bath set at 48.0 to 50.5°C so that the agar remains melted.

***Note**: TYGA tubes displaying any significant pink coloration or turbidity shall be discarded immediately. TYGA that are boiled or placed in the water bath for too long will cause the TTC to degrade, and may cause erroneous results. Also, any TYGA tubes that fall under water in the water bath shall be discarded, as contamination may occur. If the water bath temperature or water level is set too low the agar may start to solidify prior to pouring into petri plates. This results in an incomplete bacterial lawn where plaques are difficult to identify. If the bath is too hot, then the E. coli host and bacteriophage may be killed and unable to form plaques.*

8.3.3 Bacteriophage QC

Select the appropriate bacteriophage stock inoculum (high titre) of known concentration to be used for positive controls and for Quality Control of TYGA (typically located in the long-term storage fridge).

Dilute the bacteriophage stock in phosphate buffered water to a known final concentration in a plastic 1 L bottle without preservative, and label the bottle with the preparation date as follows, **"QC.MS2.date, QCT1 date, etc"**. Store the suspension at 4°C. This suspension is called the "Bacteriophage QC Suspension" (working suspension) and is located in the sample fridge in the main laboratory.

Determine the concentration of the bacteriophage in the QC suspension using the method described in Section 8.4.

Record the "Bacteriophage QC Suspension" information in the Phage Logbook. Include the date of preparation, the bacteriophage stock number used to prepare the stock suspension. The ideal range is outlined in Table 2, and the dilution can be adjusted over time as appropriate

8.4 Sample Analysis

Processing of environmental or study samples will be done on the centre island of the main lab, and plates are left to solidify on the surrounding counter tops in the main lab. Processing may also be done in the back research area. Five workstations are in place for processing phage samples. When possible, phage stock suspensions, controls and other samples known to contain high concentrations of phage should be processed at a separate station and using separate equipment from those samples known to contain low concentrations of phage or may be separated by time. Surfaces and equipment must be thoroughly disinfected, as per SOP#59, Disinfection of Laboratory Bench Surfaces, Biosafety Cabinets and Laboratory Fume Hood, before use, during processing as required and at the end of each use. A clean lab coat should be worn each day while processing samples. Ideally, one analyst should conduct the analyses for *sets* of influent and effluent samples. The analyses are signed off on the bench results record forms (GAP-F-7) along with all media used (including dates prepared) and the host bottles used.

8.4.1 Processing Samples

Provide each sample for bacteriophage enumeration with a laboratory reference number and record it on the bench results record form (GAP-F-7) as described in **SOP#24, Sample Traceability, Documentation and Validation**.

Please ensure the outside of each tube is wiped with Pursue upon arrival to ensure concentrated bacteriophage is not transferred on analyst's hands during processing.

Set up two test tube racks (with towels underneath) at each station used for analysis. An additional towel should be placed at the bottom of the test tube rack used to hold the TYGA tubes to absorb water drips on the outside of the tubes.

Place a bottle containing approximately 50 mL of the appropriate overnight *E.coli* host broth culture beside the TYGA test tube rack. This bottle can be used for up to 72 hours (maximum 48 hours for *E. coli* Famp) from the time of inoculation.

Ensure micropipettes have calibration verified daily and recorded on GAP-F-120.

The sample and dilution blanks are placed in the dilution test tube rack. Samples in sample containers other than the small tubes are placed beside the test tube rack.

Prepare a dilution series for each sample in phosphate buffered water. Select 1 to 3 sample dilutions that will likely contain the appropriate number of plaque forming units (PFU) per plate (mL) as outlined in **Table 2**. Place the correct number of sterile petri plates on the bench near the TYGA rack.

Label each petri plate with the sample number and dilution; colour coded to phage type (BLACK = MS2, BLUE = T1UV, RED = T7, GREEN = other phage types). Make a record of the host bottle used for a block of samples in the bench results record form (GAP-F-7).

Place the correct number of 20 mL molten TYGA tubes (or 10mL molten 2x TYGA tubes) in the TYGA test tube rack. **Discard any TYGA tubes that exhibit significant pink colour or turbidity of any type.**

Add approximately 1 mL of the appropriate *E. coli* host culture to each tube containing TYGA. Ensure that the *E. coli* host culture does not come into contact with phage by cross-contamination and use only new unopened bags of pipettes for dispensing host cultures.

Add an appropriate volume from each sample dilution (containing phage) into the tube containing TYGA and *E. coli* host for that dilution.

Or add 10 mL from each **room temperature** sample dilution (containing phage) into the tube containing 2X TYGA and *E. coli* host for that dilution. If samples have not reached room temperature when analysis is required then 10mL of sample can be added to a sterile glass tube and submerged in a water bath for up to 1.5 minutes which will raise the temperature to no higher than 45°C.

Gently mix each tube by inversion.

Use a towel to dry the outside of the TYGA tube.

Aseptically pour the inoculated TYGA into the petri plate for that dilution.

Repeat the process until all dilutions and samples have been analyzed. Ensure that a small volume of *E. coli* host culture remains in each the bottle to be used for controls.

Ensure all dose zero samples from collimated beam analysis are plated at least in duplicate. Any plating error with these samples is propagated in the log inactivation calculations for the entire collimated beam.

Allow agar to solidify on the bench with the lids offset and covering half the plate (approximately 10 minutes). Prolonged contact on cold surfaces such as counter tops can cause the clearing zones to be small and difficult to enumerate.

After the agar has solidified, invert the plates, place them in a container (up to a maximum of 6 plates high) and incubate them for 18-24 hours at 35 ± 0.5°C or until a deep red colour has developed in the bacterial lawn such that there is contrast sufficient for counting plaques. Ensure that the plates are placed in the incubator within 30 min of being poured.

8.4.2 Controls - Method Blank

Method blank controls are done, at minimum, during each day that phage samples are analyzed, and must include each media type used during testing (i.e. TYGA and 2x TYGA), for each host type used for analysis, and using the maximum number of replicates analyzed during that particular day.

The method blank may consist of water from the experiment that was not inoculated with phage, or may consist of sterile phosphate buffered water at the lab.

Label sterile petri plates with the QC number and the volume of method blank water analyzed.

Two mL of method blank control is analyzed using 1 mL of host culture for TYGA and 10mL of method blank water with 1 mL of host culture is analyzed if using 2X TYGA.

Aseptically pour the inoculated agar into the petri dishes and allow to solidify with the lid offset

The "Method Blank" control must be completed after all analysis is complete for the day to ensure contamination has not been introduced at some point during the procedure. The Method Blank is logged and recorded in the QC binder.

8.4.3 Controls - Host

Host Controls are performed in the morning prior to the analysis of samples. An analyst will conduct a positive and negative control for each 50 mL bottle of *E.coli* host culture. Before performing these controls each host bottle is to be partially submerged in cold water to stop *E. coli* replication. An additional negative control is done after the host bottle has been used for analysis.

8.4.3.1 Negative Controls

Label sterile petri plates with the *E. coli* culture QC number, with an additional designation to indicate that it is a Start or End negative control (i.e. St 0, End 0, or equivalent). For the End control also include the last sample number analysed using that bottle.

Analyze as per 8.4.1 without addition of any sample, and covering the plate immediately after pouring.

8.4.3.2 Positive Controls

Using the appropriate Bacteriophage QC Suspension (Section 8.3.3), prepare a dilution series in phosphate buffered water. Select a dilution that has previously been shown to give the appropriate counting range of plaques per mL as shown in **Table 2**. This dilution will be used for positive controls.

Label sterile petri plates with the *E. coli* culture QC number, with the dilution of the Bacteriophage QC Suspension analyzed and with an additional designation to indicate that it is a Start control (i.e. St $\overline{1}$ or equivalent).

Analyze as per 8.4.1 adding the appropriate dilution of the Bactiophage QC suspension.

8.5 Reading/Counting

After incubation, remove all plates from the incubator.

An image of all plates must be captured by the Sorcerer colony counting system using the steps outlined in SOP 108 for MS2 and T1UV. Manual counting and recording procedures are to be used for all other phage types.

The Sorcerer must first be calibrated against manual counts as outlined in SOP 108.

Some plates may be uncountable by the Sorcerer due to streaks, clumped colonies or faint bacterial lawn. Pictures of these plates are still required but a manual count must be entered in place of the Sorcerer derived count on the Sorcerer printout/spreadsheet.

Enter an approximate count using "~" if it is not possible to get an exact count, enter ">10000" if the plate is overgrown and it is impossible to estimate the count, or enter "LA" for lab accident.

Press delete on a count where a manual count is required but is not immediately performed so that the Sorcerer count is not incorrectly transferred to a final report. This will leave the cell blank with a "MC" designation to indicate a manual count is required. All counts where the Sorcerer detects less than 20 pfu must be verified by manual counts.

Use the Quebec colony counter or another suitable light, to examine the plates for manual counting.

Count all circular clear zones as plaques. Read all plates that fall within the counting range outlined in Table 2. For an example of a plate with plaque formation, see Appendix III.

Plates with plaque counts outside of the acceptable ranges (Table 2) may also be counted or an approximate count of the plaques may also be made and recorded. This will aid in determining an appropriate dilution at which to perform repeat analysis.

The Optimax Sorcerer Image Analyzer can be used to enumerate MS2 and T1UV plaques (See SOP 108 for information on use). Alternatively, the Lemna Tec MikroBio software and camera system can be used to enumerate MS2 plaques. See SOP 85 for further direction on the use of this system.

Note: The accuracy of The Optimax Sorcerer Image Analyzer is poor when plaque counts are outside the limits outlined in Table 2. These plates should be counted manually or the count output by The Optimax Sorcerer can be verified by the user confirming the pink dots that appear on the output screen match the plaque formations on the plate .

Note: The Lemna Tec is not currently part of the monthly among analyst testing and should not be used for counting MS2 until the accuracy of the counts can be verified.

Record all results on the bench results record form (GAP-F-7) as described in **SOP#24, Sample Traceability, Documentation and Validation**, or add the notation "See Sorcerer Printouts."

On the Sorcerer printouts ensure they are signed and dated by the analyst who ran them through the Sorcerer, attach them to the chain of custody to be filed with the final report.

Positive control plates are observed for proper plaque morphology, good dispersion and are quantified by the Sorcerer to ensure the contain an appropriate number of plaques (Table 2). If all these conditions are met the analyst will record the count achieved on the plate. Historical counts on positive controls can be used to determine whether the recovery rate of the host is as expected.

The negative control plates are counted by the Sorcerer as noted above with the Sorcerer printouts containing the positive and negative control results filed in the QC binder with the notation "See Sorcerer Printouts" placed beside the QC number. Ensure that the Quality or Project Manager approves the control values. The Quality or Project Manager must ensure that the negative control is zero, or reasonably close to zero.

Note: Given the volume of samples analyzed by the laboratory, there are times when there are greater than zero plaques on the negative control plate.

Adverse control results should be brought to the attention of the Project Manager, Lab Manager, and/or Quality Manager.

Repeat analysis may be necessary and should be brought to the attention of the Project Manager, Lab Manager, and/or Quality Manager. These repeats are recorded on the

"Microbial Repeat Analysis Form" (GAP-107) and highlighted in the bench book or on the Sorcerer printout.

8.6 Stability Testing

Stability testing may be required due to a client request or to extend the allowed analysis time frame for samples that must be repeated.

Between analysis time points, samples must be stored at 4.0 ± 2.0°C.

Choose a number of samples that correspond to influent (un-dosed) samples and effluent (dosed) samples that provided acceptable counts on the first day of analysis and re-analyze them at the same dilutions using the procedures described in Section 8.4. If the samples were tested as part of a large bioassay validation then it is preferable to, at minimum, select an entire "run" of samples to re-analyse and for large projects to select at minimum two "runs" to re-analyze that encompass variations in water quality such as low UVT and high UVT (without UVT modifier if possible). Random selection of samples/runs is acceptable if water quality conditions are unknown and client selected samples/runs may also be used at the client's request.

Samples must be re-analyzed at least once (but more re-analysis is acceptable) and must encompass the entire time period that analysis took place (i.e. if samples are repeated up to 72 hours after initial analysis then stability testing must also take place at this time or later).

The results of stability testing may be included on the final report at the client's request, otherwise the results must be kept for GAP QC purposes.

9.0 CALCULATION PROCEDURES

The number of plaque forming units (PFU) per mL of sample is equal to the number of plaques on the plate divided by the volume (mL) of original sample plated.

$$\mathrm{pfu/mL} = \frac{1}{\mathrm{Volume\ analyzed}} \times \mathrm{pfu\ count} \times 10^{\mathrm{dilution\ factor}}$$

10.0 REPORTING AND DATA QUALIFICATION

Report the number of bacteriophage plaque forming units (PFU) and dilution log per mL. Sample counts for each dilution, and results for positive and negative controls are recorded on the bench results record forms (GAP-F-7).

The final report should be prepared and verified according to **SOP#24, Sample Traceability, Documentation and Validation**. Briefly, the report must be prepared and signed by an analyst using form Sample Results Form (GAP-F-16), 'Phage' sheet, located on the GAP I: drive. The results must be confirmed and signed by the Quality Manager, Lab Manager or a Technical Manager before they are transmitted to the client.

11.0 PROFICIENCY TESTING

New staff and students read the methods and SOPs before working on the bench, and follow **SOP#30, Training Laboratory Staff**.

After trainees have learned the basic concepts, experienced staff will train and monitor the trainee. During this process, controls and sample plates are examined to ensure that dilutions have been prepared properly, that there is good plaque formation and distribution on plates, and that plaques are identified and counted correctly. Both the trainee and an experienced technician will count plaques to ensure that equivalent results can be obtained. Training will continue until the trainer is confident that the trainee can perform the method accurately, and until the trainee has demonstrated acceptable proficiency through participating in Among Analyst evaluation.

There is no proficiency testing provider currently available for bacteriophage analysis therefore, intra-laboratory among analyst analyses are employed to comply with the CALA proficiency testing provisio (option vi).

12.0 CALIBRATION AND STANDARDIZATION

12.1 Media and Reagents

The media and reagents are listed **Appendix I**. Every effort is made to standardize components of this process, including: the brands and quality of chemical ingredients and dehydrated culture media (GAP Chemical-Media Inventory and Storage Guidelines List), the accuracy of weighing, the temperature at which agars are heated before sterilization, if sterilization is required, the temperature and duration of sterilization, how and under what conditions media and solutions are dispensed, and Quality Control procedures for culture media and solutions. **SOP#58, Media, Solutions and Reagents Quality Control**, describes the actual QC process followed by the media room personnel, and describes the procedure that is followed before a media or solution can be used.

12.2 Incubation Parameters

Every effort is made to standardize components of this process including: incubator specifications, humidity, allowable temperature range, incubation period, the frequency and method used to monitor temperatures, uniformity of temperature within the chamber, and labelling of the containers.

12.3 Recording Results

Every effort is made to standardize components of this process including: the type of illumination, the magnification used to examine plates, plaque enumeration procedures, recording plate count results, and training the technologists receive for plaque identification and counting.

12.4 Equipment

Equipment such as incubators, refrigerators (SOP#12), pH meters (SOP#16), thermometers (SOP#27), balances (SOP#5), biosafety cabinets (SOP#13), autoclaves (SOP#4), micropipetters (SOP#57) are subject to calibration and/or monitoring by following the Standard Operating Procedures (SOPs).

13.0 ANALYTICAL PERFORMANCE SUMMARY

13.1 Within-Analyst Precision

Please see **SOP#33, Within Analyst (Duplicate) Evaluation**.

Within-Analyst (duplicate) data has been accumulated, and has been used to calculate the Mean Difference per Range (MDr) for this method. Each analyst’s duplicate performance is evaluated using these MDrs, where the MDrs used in the evaluation are dependent on the type of phage being analyzed. A duplicate MDr summary for each method (and analyst, if applicable) can be found on the GAP Quality System in the CALA, UBC, CMPT, EPA Folder.

13.2 Among-Analyst Performance

Please see **SOP#31, Among Analyst Performance Evaluation Protocol**.

The precision for among analyst evaluations for the Bacteriophage Method has been established for all the four ranges for **MS2**. The precision for each range is as follows:

Range (pfu/plate)	MS2 Bacteriophage Precision (RSD)		
	Plating Analysis	Counting Analysis	Plating /Counting Analysis Combined
0-19	0.4429	0.1247	0.4601
20-100	0.2189	0.0590	0.2267
101-200	0.1720	0.0694	0.1855
201-500	0.1257	0.0651	0.1415

The precision for among analyst evaluations for the Bacteriophage Method has been established for all the three ranges for **Q-Beta**. The precision for each range is as follows:

Range (pfu/plate)	Q-Beta Bacteriophage Precision (RSD)		
	Plating Analysis	Counting Analysis	Plating /Counting Analysis Combined
0-19	0.4659	0.1343	0.4849
20-100	0.1823	0.0845	0.2009
101-200	0.0956	0.0417	0.1043

The precision for among analyst evaluations for the Bacteriophage Method has been established for all the three ranges for **PhiX-174**. The precision for each range is as follows:

Range (pfu/plate)	PhiX-174 Bacteriophage Precision (RSD)		
	Plating Analysis	Counting Analysis	Plating /Counting Analysis Combined
0-10	0.4157	0.0664	0.4209
11-75	0.2098	0.0989	0.2319
76-101	0.1700	0.0530	0.1780

The precision for among analyst evaluations for the Bacteriophage Method has been established for all the three ranges for **T1UV**. The precision for each range is as follows:

Range (pfu/plate)	T1UV Bacteriophage Precision (RSD)		
	Plating Analysis	Counting Analysis	Plating /Counting Analysis Combined
0-19	0.4652	0.0600	0.4691
20-100	0.2123	0.0812	0.2272
101-300	0.2837	0.0800	0.2948

The precision for among analyst evaluations for the Bacteriophage Method has been established for all the three ranges for **T7**. The precision for each range is as follows:

Range (pfu/plate)	T7 Bacteriophage Precision (RSD)		
	Plating Analysis	Counting Analysis	Plating /Counting Analysis Combined
0-19	0.3456	0.1404	0.3730
20-100	0.1787	0.1112	0.2105
101-200	0.1281	0.0825	0.1523

14.0 METHOD VALIDATION

The method BACTPHAGE-0001 is fit for the intended use, modified from the following reference:

Standard Methods 9224E – see Section 3.1 Relationship to Other Methods within BACTPHAGE-0001 for specific modifications.

Published, standard or recommended methods shall be used and records maintained, which establish that any deviations from these methods are acceptable. Quality Control results must be in compliance with tolerances outlined in the Methods and SOPs before results produced by this Method are considered valid.

Quality Control results are checked routinely. The Methods and SOPs mentioned in Section 12.0 of this Method and the information they provide will be reviewed at least annually during a Management Review (see the Quality Assurance Manual). The following items will be assessed; analytical performance of the Method, Quality Control of media and equipment, comparison with other methods, and the results of any in-house validation testing. Any changes to the Method will be done according to the Quality Manual and will be approved by the Quality Manager and Laboratory Manager or Laboratory Director.

14.1 Uncertainty

GAP determines Uncertainty using the policy as outlined by CALA in their document P19-CALA Measurement Uncertainty Policy, Appendix 2 for Microbiology.

When samples are analyzed in a laboratory, various components of the pour plate method (e.g. analysts who plate and analysts who count plaques) may change and add more variation. In addition, the sample holding time before analysis, the batch of culture medium, glassware, etc. may change and contribute additional variation to the results.

The plaque counts are seldom identical when an analyst uses pour plating to analyze a sample repeatedly. There is always random variation in the plaque counts among the replicate tests even though the best methods are used, all equipment is the same, the equipment is functioning properly and the analyst follows the procedure with great care.

Uncertainty associated with plaque counts can be caused by the variation associated with field effects, which may include the variation associated with sampling or the variation in levels resulting from different conditions during sample transport to the laboratory.

After the laboratory receives the sample, there are many other components (factors) associated with laboratory effects and analysis, which can contribute significantly to uncertainty.

Laboratories are responsible for only the portion of uncertainty, contributed by the laboratory itself. Therefore, to get a good sense of the potential sources of variation, below is the list of factors which contribute to the combined uncertainty associated with laboratory effects.

- Variation in the temperature of sample storage at the laboratory
- Variation in sample holding time within the laboratory before analysis
- Variation in different batches of a culture medium made from a particular lot
- Variation in different lots of the same culture medium
- Variation in the accuracy of volume measuring devices (e.g. pipettes, graduated cylinders)
- Variation in counting equipment
- Variation in the volume of liquid in dilution blanks
- Variation associated with serial dilution
- Variation in the performance of any given analyst (within-analyst variation)
- Variation in the performance among analysts (among-analyst variation)
- Variation in temperature within an incubator
- Variation in temperature between or among incubators supposedly at the same temperature
- Variation in reading (plaque counting) for a single analyst (within-analyst reading variation)
- Variation in reading (plaque counting) among analysts (among-analyst reading variation)

For further detailed explanation on Uncertainty in Microbiology refer to our document in GAP Quality System located in the network under I:\GAP Quality System\Misc. QC\ UNCERTAINTY.

The Uncertainty for among analyst evaluations for the Bacteriophage Method has been established for all the ranges for **MS2**. The Uncertainty for each range is as follows:

MS2 Range (pfu/plate)	Uncertainty (U%) at 95% Confidence	Uncertainty for Count (C)
0-19	46	C ± 46%C
20-100	23	C ± 23%C
101-200	19	C ± 19%C
201-500	14	C ± 14%C

The Uncertainty for among analyst evaluations for the Bacteriophage Method has been established for all the ranges for **Q-Beta**. The Uncertainty for each range is as follows:

Q-Beta Range (pfu/plate)	Uncertainty (U%) at 95% Confidence	Uncertainty for Count (C)
0-19	48	C ± 48%C
20-100	20	C ± 20%C
101-200	10	C ± 10%C

The Uncertainty for among analyst evaluations for the Bacteriophage Method has been established for all the ranges for **PhiX-174**. The Uncertainty for each range is as follows:

PhiX-174 Range (pfu/plate)	Uncertainty (U%) at 95% Confidence	Uncertainty for Count (C)
0-10	42	C ± 58%C
11-75	23	C ± 47%C
76-100	18	C ± 36%C

The Uncertainty for among analyst evaluations for the Bacteriophage Method has been established for all the ranges for **T1UV**. The Uncertainty for each range is as follows:

T1UV Range (pfu/plate)	Uncertainty (U%) at 95% Confidence	Uncertainty for Count (C)
0-19	47	C ± 47%C
20-100	23	C ± 23%C
101-300	29	C ± 29%C

The Uncertainty for among analyst evaluations for the Bacteriophage Method has been established for all the ranges for **T7.** The Uncertainty for each range is as follows:

T7 Range (pfu/plate)	Uncertainty (U%) at 95% Confidence	Uncertainty for Count (C)
0-19	37	C ± 37%C
20-100	21	C ± 21%C
101-200	15	C ± 15%C

15.0 HISTORY OF CHANGES AND REVISIONS

15.1 Revision 1 – Aug 30, 2001 – The first MS2PHAGE-0001 Method at GAP EnviroMicrobial Services was written August 30, 2001.

15.2 Revision 2 – December 12, 2001 – The method of analysis was not changed with the second revision, but each section of the Method was revised to better describe the various procedures used.

15.3 Revision 3 – February 15, 2002 – Was due to some minor inaccuracies and modifications.

15.4 Revision 4 – April 11, 2002 – in response to a site visit by Clancy Environmental. Minor changes were made to clarify procedures, and a section was added outlining the importance of separating processes in the laboratory for concentrated phage stocks and environmental or study samples.

15.5 Revision 5 – February 26, 2003 – consisted of QC control changes.

15.6 Revision 6 – Unknown Date – changes the TYGB broth formulation for phage enumeration to match that of the ISO standard. The TYGB formulation for producing high titre phage stocks remains unchanged. An explanation as to why the changes were made, together with data and statistical analysis supporting these changes, are located in the method variance binder (MS2-0001, March 24, 2003). Revision 6 also makes minor modifications to the Quality Control procedures, including the preparation of QC stocks and positive and negative controls.

15.7 Revision 7 – August 27, 2003 – involved the reorganization of the appendices. The media appendix (Appendix I) was made into a list and referred to the Media Recipe binder. An appendix of the list of GAP documents was added. The numbering system was also simplified.

15.8 Revision 8 – October 7, 2003 – was done to address the items that came up during the CAEAL audit of September 11, 12 of 2003.

15.9 Revision 9 – January 6, 2005 – was completed to address some items that came up in the 2004 internal audit.

15.10 Revision 10 – July 20, 2005 – was completed to allow several bacteriophages to be included following the same method and protocols, which changed the Method title from MS2PHAGE-0001 to BACTPHAGE-0001. There is no difference in the processing of any of the bacteriophage proposed, however the appropriate host bacterium must be used for infection and preferred counting ranges were determined (Table 2). Minor modifications were also made to clarify the instructions and improve the ease of reading. Appendix VII, which was a copy of SOP #40, was removed to ensure that only the most current version is followed.

15.11 Revision 11 – Unknown Date – was done to accommodate the CAEAL 2005 audit.

15.12 Revision 12 – January 4, 2006 – done in response to the GAP 2005 internal method audit, addressed the plate and stock incubation temperature change and some minor spelling issues.

15.13 Revision 13 – April 26, 2006 – was revised due to an inquiry from a client as to why there are multiple hosts per Bacteriophage type. Table 1 on page 5 was updated to reference the use of specific hosts. The multiple, potential hosts/bacteriophage from Tables 1 and 2 were removed to indicate the most commonly used, primary hosts. Appendix II was updated to indicate the primary hosts used while continuing to indicate the alternate hosts available. The header was also updated to accurately reflect the method title. Spelling and grammatical errors were corrected. Formatting changes were made.

15.14 Revision 14 – March 7, 2007 – was revised to correct the terminology from “cell membrane” in Section 3.0 to “cell wall”. The word “roundish” was added to the statement ‘The plates are examined for clear, roundish zones (plaques), which indicate that the phage have lysed the *E. coli* bacterial cells.” in Section 2.0. In Section 8.4.3., the counting limits “between 20 and 300 plaques” was defined to be for MS2 and T1 phage, and “between 10 and 150 plaques” for PhiX phage due to their large plaques. **Section 13.0, Analytical Performance Summary**, **Section 14.1, Measurement of Uncertainty**, and **Appendix IV** were updated to include information and statistical data relevant to each section to note the evaluation of the analyst’s performance. Reference to GAP Form #s was also made. **Section 6.3**, Contingencies, was also updated. Reference to SOP#41 was removed as it has been merged with SOP#58, Media, Solutions and Reagents Quality Control. Reference to the QA-QC Documents folder has been removed. **Section 11.0**, Proficiency Testing, was updated.

15.15 Revision 15 – May 7, 2007 – was revised to address the items that came up during the April 2007 CAEAL audit. **Section 13.0, Analytical Performance Summary**, **Section 14.1, Measurement of Uncertainty** was updated to include all the statistical data relevant to the outstanding CAEAL audit items. Removed **Section Appendix IV, Within Analyst Precision Summary** in the method to be consistent with all other accredited methods and appendixes were renamed. The location of this data is described in **Section 13.1 Within Analyst.**

15.16 Revision 16 – August 7, 2007 – was revised to address the new company name change.

15.17 Revision 17 – January 10, 2008 – was revised as a result of the 2007 internal method audit. **Appendix II** was updated to reflect the current media that is used to subculture the different *E. coli* host cultures. **Appendix II** was updated to include the procedure of how to prepare an *E. coli* Hfr host culture for bacteriophage analysis. **Section 8.3 and Appendix II** were updated to reflect the ideal counting range for PhiX174 plaques. **Section 8.3.2** was updated to include a note to discard any TYGA tubes that fall below the water line in the water bath. References to the -76°C ultra-low freezer in **Appendix II** were updated to include the following statement; “the ultra low freezer has been taken out of service temporarily. The culture collection is being stored at -20°C until a replacement ultra low freezer has been purchased”. **Section 8.4.3** was updated to ensure plaques that have formed on the edges of the petri plates are included in the total plaque count. This section was also updated to include that proper plaque morphology and good dispersion are observed in the positive control plates, in addition to the confirmation of the correct quantity of plaques.

15.18 Revision 18 – September 8, 2008 – was reviewed and revised to address CAEAL name change to CALA. There were no other changes required.

15.19 Revision 19 – December 9, 2008 – was revised to include reference to a new form for repeat analysis in Section 8.4.3.

15.20 Revision 20 – January 28, 2009 – was completed as a result of the 2008 internal method audit. **Section 6.0** was updated to widen the acceptable temperature range from 4-8°C to 0-15°C. All references to labelling host bottles with a separate identification letter have been changed to reflect the current practice of assigning each host bottle a unique sample number.

Section 8.3.1 was updated to include six-hour TYGB host cultures. In **section 8.3.3**, the ideal counting range was changed from 50-150 to 30-150 PFU per plate. Clean lab coats should be worn each day bacteriophage samples are processed. This was added to **section 8.4**. In order to avoid water droplets in the petri plates, the TYGA tubes should have a towel placed underneath them, as well as dried with a towel prior to pouring (see **section 8.4.1**). **Section 8.4.1** was updated to include that petri plate labels are colour coded to phage type. This section also now includes reference to stacking petri plates up to a maximum of 6 high prior for incubation. **Section 8.4.2** was updated to include that method blanks are required for host type. **Section 8.4.3** was revised to include reference to the Lemna Tec MikroBio software and camera system for MS2 plaque enumeration. The end of **section 8.4.3** was amended to include that samples selected for repeat analysis are highlighted in the bench book. References to the out of service ultra-low freezer were removed from **Appendix II**.

15.21 Revision 21 – May 28, 2009 – was completed in response to the CALA audit. Section 11 was updated to indicate that a PT program is unavailable but that other procedures are being used to comply with the CALA provisio. Reference to SOP#21 regarding bottle sterility was added into section 6.0. Reference to the GAP equipment manuals was added to Appendix V. Section 10 was modified to include the location of GAP-F-16.

15.22 Revision 22 – January 22, 2010 – was completed as a result of the 2009 internal method audit. New references were added throughout the method to make reference to a new phage being enumerated at GAP, T7. **Section 2.0** had the drinking water system validation specificity removed to show that this method can be used for many other UV system validations. **Section 7.1** had the requirement of pipettors being labelled for either host or phage samples removed. In **section 8.4.1** a statement was added to allow for host bottles to be used for up to 48 hours from the time of inoculation, and that only new bags of pipettes are to be used for dispensing host. Also, a requirement was added for collimated beam dose 0 samples to be always plated at least in duplicate. In **section 8.4.2** the procedure for performing negative starts on bottles was changed to have host bottles be submerged in cold water before having controls performed to stop any further *E. coli* replication, and also that all negative start and end plates be covered immediately after being poured to prevent any airborne contamination. In **section 8.4.3** it was added that the Sorcerer colony counter can be used for counting MS2 and T1UV plaques. **Appendix III** had images of T1UV, Q-beta, PhiX-174 and T7 plaques added, and the image showing MS2 plaques was replaced with a new image.

15.23 Revision 23 – March 23 – 2010 was completed to revise the following sections to include using *E. coli* B as the new host for T7 and the new counting range of 15-150 PFU per plate: section 2, table 1, section 8.3, table 2, appendix II and appendix III. This is the current practice at GAP.

15.24 Revision 24 – May 11, 2010 – was complete to include a note in section 8.4.3 that indicates the necessity to manually count MS2 and T1UV petri plates that have fewer than 20 plaques. Also, the statement about counting plaques that formed at the edge of the plate was removed.

15.25 Revision 25 – June 21, 2010 – was revised to change the method reference from ‘not based on’ but to ‘modified from the reference’ in Section 14, Method Validation.

15.26 Revision 26 – August 4, 2010 – was revised to include Uncertainity at 95% confidence and Precision of counting and plating for T7. Also, the method was updated to include sample processing using 2X TYGA and 10mL of sample. The Reporting and Data Qualification section was updated to report the dilution log per mL and PFU count, as we do not typically report PFU/mL.

15.27 Revision 27 – March 7, 2011 – Section 8.4.1 paragraph 3 stated that the host can be used up to 48 hours after inoculation. This has been extended to 72 hours. There was no difference between 48 hours and 72 hours. This allows for improved quality insurance with this extension of time. Section 13.2 precision table for Q-Beta the RSD value was changed in the counting analysis section for range 101-200 to reflect addition data.

15.28 Revision 28 – August 8, 2011 – was revised to include a further detailed explanation on Uncertainty. The chart for Precision was updated to include a combined plating/counting precision section.

15.29 Revision 29 – April 20, 2012 – Section 2.0 had clarification included that more than one host can be used for certain phage recovery. All references to Isbister et al. 1983 were removed as we do not have this reference on hand at GAP. Section 6.0 was clarified as bottles with sodium thiosulfate can be used to collect any sample that is not meant for collimated beam. Section 6.1 now allows for indefinite repeats to be completed on samples as long as stability can be verified. The water bath temperature is now a range in section 8.3.2. The method of QC stock preparation in section 8.3.3 was changed to allow more closely reflect current procedures. Section 8.4 had notes on QC of micropipettes and recording of media lots added and the current practice of using volumes other than 1 mL of sample added included (Method validation completed). Also, in this section the expiry of host bottles was updated, and the procedure for negative controls on host bottles was clarified. In 8.4.3 the SOP number for the Sorcerer colony counter was added. The GAP host numbers were updated in APPENDIX II and Table 1 (Section 2.0).

15.30 Revision 30 – May 23, 2012 – was revised to include a new reference.

15.31 Revision 31 – December 19, 2012 – Updated method references to latest version of Standard Methods (22nd Edition). Clarified what must be verified if samples are analysed past 48 hours from when they are taken (Section 6.1). Section 8.3.3 was clarified on how to treat QC stocks over time. Section 8.4.1 had a note added regarding disinfection of tube exterior upon arrival and how to warm "cold" samples requiring analysis at 10mL. Section 8.4.2 clarified how "Method Blanks" are performed and how to properly label host end negative controls. Section 8.4.3 had a reference added to include the counting range for T7 and a note on how the Lemna Tec must be verified before each use as it is not currently in routine use in the among analyst counting.

15.32 Revision 32 – August 30, 2013 – Updated section 3.1 to clarify differences as compared to the reference method. Section 14 has been updated by removing the revision date from the reference method as the method is reviewed with each new released revision of Standard Methods. The most recent Standard Methods is the 22nd edition.

15.33 Revision 33 – April 23, 2015 – Updated line formatting throughout the document. Changed "should" to "shall" in sections 6.0, 8.3.2. In section 6.1 changed "time" to "type," this was a typo and did not change the intended meaning of the section. Section 8.3.2 updated to say "significant" pink colour as slight pick colouration of the TYGA will not affect results. Location on where to record media lot numbers updated to bench sheets in sections 8.1 and 8.4. Added "approximately 50mL" to section 8.4.1 regarding the volume of the ISO Mod TYGB.

Changed wording of one bullet in section 8.4.1 to "Place the correct number of 20 mL molten TYGA tubes (or 10mL molten 2x TYGA tubes) in the TYGA test tube rack. Discard any TYGA tubes that exhibit significant pink colour or turbidity of any type," for clarity. Also in section 8.4.1 and 8.4.2 clarified wording of one bullet to state that the lawn must be deep red in colour prior to counting. Changed wording to allow alternative designations for positive and negative controls in section 8.4.2 such as "start" and "end." Clarified the methods for counting and recording results outside allowable limits for a particular bacteriophage in section 8.4.3 including how to use the automatic counters in these ranges. Added that positive control plates are now to be counted and recorded on the GAP Benchsheets in section 8.4.3. Section 10.0 had the name of the GAP form 16 changed for clarity purposes. Section 14 had should changed to shall. None of the above changes would cause major methodology changes, all modification are for clarity and ongoing improvement only.

15.34 Revision 34 – February 24, 2016 – Formatting changes throughout including the creation of new sections to replace bullet points, the addition of headings to separate portions of sections, and re-formatting of tables. Wording clarification in the following sections 1.0, 3.1, and 6.0. In Section 6.1 a statement regarding use of stability testing to extend the sample analysis hold times. Section 8.6 added to describe stability testing. Corrected the Section references in Section 7.1 to Section 8.4 from Section 8.2 and 8.3. Changed references from GAP sample numbers to QC sample numbers for any host bottles and method blank references. Added references throughout to counting with the Sorcerer in all instances so that images of the plates are saved. These can be found in sections 8.3.1. In section 8.3.2 Added the terms "or turbidity" to indicate when TYGA tubes are to be discarded and a note was also added that high water bath temperatures may also kill off the *E. coli* host. In section 8.4 added that the host bottles used must be recorded on the bench sheets. Clarified the method blank, negative control and positive control procedures in section 8.4.2. In section 8.4.3 added the notes on how the Sorcerer is to be used for counting plates. Updated uncertainties in section 13.2 and 14.1. Removed references to "filtering" in section 14.1. Removed references to T7m as it is not part of the current CALA scope.

15.35 Revision 35 – July 5, 2017 – Hyperlinked section cross references throughout document. Removed all typed references to "ideal counting range" for phage types throughout document and referenced back to Table 2. In Section 2 added note that this method is not appropriate for "unseeded" bacteriophage samples. Added HER culture collection reference to Table 1 and Appendix II. Section 6.0 added requirement that CB samples MUST be collected without chlorine present. Added an "Ideal Counting Range" to Table 2. Section 8.3.1 for 6-hour host clarified that ISO Mod TYGB must be at room temperature before inoculating. Section 8.3.2, clarified that "set too low" pertained to both water level and temperature of the water bath. Section 8.4.1 added the colour coding for phage types. Section 8.4.3 removed duplicate text and added section cross reference on hos to process control samples. Section 8.5 corrected Form 107 title. Section 8.6 clarified that "High UVT" should be without UVT modifier where possible. Section 9.0 reformatted the calculation as a formula. Appendix II, added that mFC-BCIG is never to be used for phage host subculture.

16.0 REFERENCES

American Public Health Association. 2012. Standard Methods for the Examination of Water and Wastewater, 22th Ed. American Public Health Association, Washington, D.C.

Havelaar, A.H. and W.M. Hogeboom. 1984. A method for the enumeration of male-specific bacteriophages in sewage. Journal of Applied Bacteriology. 56:439-447.

Hurst, C.J., J.C. Blannon, R. L. Hardaway, W.C. Jackson. 1994. Differential effect of tetrazolium dyes upon bacteriophage plaque assay titres. Appl. Environ. Microbiol. 60:3462-3465.

International Organization for Standardization. 1995. ISO 10705-1, Detection and enumeration of bacteriophages. Part 1: Enumeration of F-specific RNA bacteriphages.

Kutter, E. and Sulakvelidze, A. 2005. Bacteriophages – Biology and Applications. CRC Press, USA.

NWRI. 2012. Ultraviolet disinfection guidelines for drinking water and water reuse. National Water Research Institute, NWRI-2012-04.

US EPA. 2001. Method 1602: Male-specific (F^+) and somatic bacteriophage in water by single agar layer (SAL) procedure. EPA 821-R-01-029, Office of Water, Washington DC.

APPENDIX I

CULTURE MEDIA/SOLUTIONS/REAGENTS

1) TYG Broth (TYGB)
2) TYG Agar (TYGA)
3) 2X TYG Agar (2x TYGA)
4) MacConkey Agar
5) Trypticase Soy Agar
6) Phosphate buffered water
7) KH_2PO_4 Solution
8) $MgCl_2 \cdot 6H_2O$ solution

Note: *All of the above recipes can be found in the media room binder 'Media Recipes' and the GAP computer Quality System, Media Recipes folder. These recipes refer to quality control cultures. Please see SOP#37, Culture Collection Maintenance for more information. See also the GAP Culture Collection List.*

APPENDIX II

STOCK CULTURES

Note: *All culture transfers must be logged into the GAP Culture Collection binder in Section 3. See also SOP#37***.**

Microorganisms

Bacteriophage Name	Classification	GAP QC Stock No	Bacteriophage ATCC No	*E. coli* Host Name	*E. coli* ATCC No	GAP QC Stock No.
MS2	F+ male specific	103	15597-B1	*E. coli* Hfr (c-3000), or *E. coli* HS (pFamp)R*, or *E. coli* K-12	15597 700891 23631	40 285 (201) 203
Q-Beta	F+ male specific	204	23631-B1	*E. coli* K-12, or *E. coli* HS(pFamp)R*	23631 700891	203 285 (201)
T7	Somatic	262	BAA-1025-B2	*E. coli* B*, or *E. coli* CN13	11303 700609	232 280 (199)
T1	Somatic	234	11303-B1	*E. coli* B*, or *E. coli* CN13	11303 700609	232 280 (199)
PhiX174	Somatic	174	13706-B1	*E. coli* C, or *E. coli* CN13*	13706 700609	25 280 (199)
T1UV	Somatic	235	HER 468**	*E. coli* CN13*	700609	280 (199)

** indicates the primary hosts used for the recovery of the bacteriophage. The other hosts listed can be used as alternate hosts, if required.*

***This culture is not available from ATCC, but can be purchased from the Félix d'Hérelle Reference Center for Bacterial Viruses culture collection at the University of Laval*

Maintenance of *Escherichia coli* host stock cultures

- Prepare all *E. coli* host cultures for long-term storage at -76°C as described in SOP#37.

  The culture must also be tested for phage infectivity using the appropriate phage QC stock suspension (see section 8.3).

  - Inoculate the appropriate *E. coli* host from the sub cultured agar plate into 50 mL of TYGB, and incubate for 18 to 24 hours at 35 ± 0.5°C without shaking.
  - Process the *E. coli* host culture as described in section 8.4 (experimental controls).

- Both positive and negative control procedures must be used. All host bottles are given a GAP QC number and results of this testing are recorded in the GAP Sample Binder. If the culture removed from the freezer is pure, lactose-positive (or confirmed as *E. coli* on BCIG) and found to be suitable as a host for bacteriophage analysis, it may be used in disinfection efficacy trials.

- Following recovery from the -76°C, the strain must be sub cultured weekly onto TSA or a selective agar as follows. Selective agar options include MacConkey agar for *E. coli* K-12, TSA with Ampicillin and Streptomycin for *E. coli* HS (pFamp)R, and MacConkey for *E. coli* CN13, as described in detail in SOP #37. Phage hosts MUST NEVER be sub-cultured onto mFC-BCIG, as some *E. coli* loose their ability to be infected by bacteriophage after being plated on this media.

- All maintenance and sub culturing steps are recorded on GAP-F-53 in the binder titled “GAP Culture Collection SOP 37” located in the main laboratory. All information, including monthly and weekly subculture dates, and results of the confirmation steps are recorded in this logbook.

Maintenance of bacteriophage stock cultures and inoculum

- Long term storage of MS2 ATCC 15597-B1 (GAP # 103), Q-Beta ATCC 23631-B1 (GAP #204), T1 ATCC 11303-B1 (GAP #234), PhiX-174 ATCC 13706-B1 (GAP #174) and T1UV HER 468 (GAP #235) bacteriophages is done by freezing at -76°C. A detailed protocol for this is located in SOP #40. In brief, freezer stocks are prepared by adding 1.5 mL aliquots of concentrated bacteriophage stock to 2 mL cryovials. The vials are then stored at -76°C.
- The phage stocks are prepared by ISO method 10705-1. The method for bacteriophage stock preparation is located in SOP#40. Each stock preparation is labelled with the date of preparation and a unique identification number. The stock is then stored at 4°C (long-term storage fridge).

APPENDIX III

MS2, T1 AND T1UV BACTERIOPHAGE PLAQUES

Pour plates incubated overnight should exhibit a maroon colour indicating utilization of TTC by unlysed *E. coli* cells. MS2, T1 and T1UV bacteriophage infect and lyse the *E. coli* host causing small zones of clearing known as plaques (See **Figure 1**.).

Counts are recorded from plates that have between 20 to 300 zones of clearing (plaques). The number of plaque forming units (PFU) of MS2, T1 or T1UV bacteriophage per millilitre (mL) of sample is calculated as follows:

The number of plaque forming units (PFU) per mL = total plaques per plate x dilution factor.

Figure 1. Example of MS2 bacteriophage plaques in a pour plate.

Figure 2. Example of T1UV bacteriophage plaques in a pour plate.

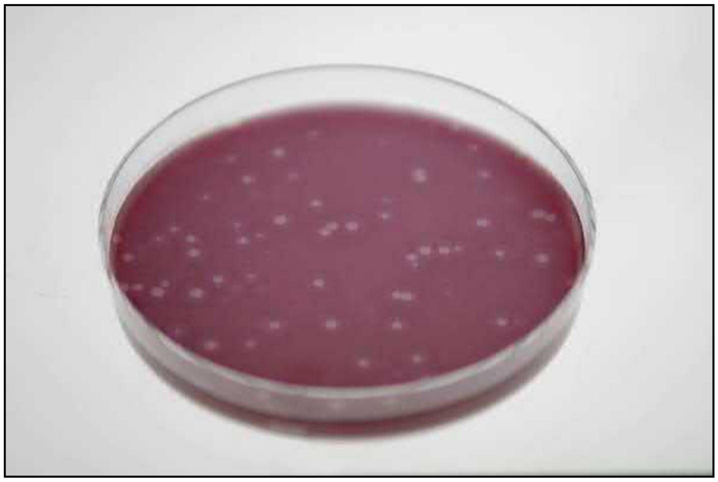

Q-BETA BACTERIOPHAGE PLAQUES

Pour plates incubated overnight should exhibit a maroon colour indicating utilization of TTC by unlysed *E. coli* cells. Q-beta bacteriophage infect and lyse the *E. coli* host causing small zones of clearing known as plaques (See Figure 1.).

Counts are recorded from plates that have between 20 to 200 zones of clearing (plaques). The number of plaque forming units (PFU) of Q-beta phage per millilitre (mL) of sample is calculated as follows:

The number of plaque forming units (PFU) per mL = total plaques per plate x dilution factor.

Figure 3. Example of Q-beta bacteriophage plaques in a pour plate.

PhiX-174 BACTERIOPHAGE PLAQUES

Pour plates incubated overnight should exhibit a maroon colour indicating utilization of TTC by unlysed *E. coli* cells. PhiX-174 bacteriophage infect and lyse the *E. coli* host causing small zones of clearing known as plaques (See Figure 1.).

Counts are recorded from plates that have between 10 to 150 zones of clearing (plaques). The number of plaque forming units (PFU) of PhiX-174 phage per millilitre (mL) of sample is calculated as follows:

The number of plaque forming units (PFU) per mL = total plaques per plate x dilution factor.

Figure 4. Example of Phi-X 174 bacteriophage plaques in a pour plate.

T7 BACTERIOPHAGE PLAQUES

Counts are recorded from plates that have between 15 to 150 zones of clearing (plaques). The number of plaque forming units (PFU) of T7 phage per millilitre (mL) of sample is calculated as follows:

The number of plaque forming units (PFU) per mL = total plaques per plate x dilution factor.

Figure 5. Example of T7 bacteriophage plaques in a pour plate.

APPENDIX IV

LIST OF ABBREVIATIONS

ATCC	American Type Culture Collection
E. coli	*Escherichia coli*
PFU	plaque forming unit
QC	quality control
SOP	standard operating procedure
TSA	tryptic soy agar
TTC	2,3,5-triphenyl tetrazolium chloride
TYGA	tryptone yeast glucose agar
TYGB	tryptone yeast glucose broth
UV	ultraviolet

APPENDIX V

LIST OF SOPs AND OTHER GAP DOCUMENTS

- SOP#4 OPERATION OF THE AMSCO AUTOCLAVES
- SOP#5 BALANCE CALIBRATION AND DAILY MONITORING
- SOP#12 QUALITY ASSURANCE & MAINTENANCE OF INCUBATORS, REFRIGERATORS AND FREEZERS
- SOP#13 OPERATION AND MAINTENANCE OF THE BIOSAFETY CABINETS AND LAMINAR FLOW HOOD
- SOP#16 OPERATION OF pH METERS
- SOP#17 SAMPLE COLLECTION FOR CLIENTS
- SOP#21 QUALITY CONTROL PROCEDURE FOR GLASSWARE & SAMPLE BOTTLES
- SOP#24 SAMPLE TRACEABILITY, DOCUMENTATION AND VALIDATION
- SOP#27 THERMOMETER CALIBRATION
- SOP#30 STANDARD OPERATING PROCEDURE FOR TRAINING LABORATORY STAFF
- SOP#31 AMONG ANALYST PERFORMANCE EVALUATION PROTOCOL
- SOP#33 WITHIN ANALYST (DUPLICATE) EVALUATION
- SOP#37 CULTURE COLLECTION MAINTENANCE
- SOP#40 PREPARATION AND STORAGE OF CONCENTRATED BACTERIOPHAGE
- SOP#53 COLLIMATED BEAM ANALYSIS
- SOP#54 INTERNATIONAL FEDEX SHIPMENTS
- SOP#57 THE OPERATION, MAINTENANCE AND BI-ANNUAL CALIBRATION OF LABORATORY MICROPIPETTERS
- SOP#58 MEDIA, SOLUTIONS AND REAGENTS QUALITY CONTROL
- SOP#59 DISINFECTION OF LABORATORY BENCH SURFACES, BIOSAFETY CABINETS AND LABORATORY FUME HOOD
- SOP#85 SET UP, OPERATION AND CALIBRATION OF LEMNA TEC MICROBIO SOFTWARE AND CAMERA SYSTEM
- SOP#108 SORCERER COLONY COUNTING SYSTEM
- GAP QUALITY MANUAL
- GAP CULTURE COLLECTION LIST
- GAP MEDIA RECIPES BINDER
- GAP EQUIPMENT INSTRUCTION MANUALS
- GAP CHEMICAL-MEDIA INVENTORY AND STORAGE GUIDELINES LIST

GAP EnviroMicrobial Services Ltd.

APPROVAL FORM FOR RELEASE OF
ANALYTICAL STANDARD OPERATING PROCEDURE (SOP) FOR ROUTINE USE

SOP #40:

PREPARATION AND STORAGE OF CONCENTRATED BACTERIOPHAGE

NOTE: THIS IS A GAP ENVIROMICROBIAL SERVICES PROPRIETARY PROCEDURE

COMPUTER FILE NAME: 40-SOP-Phage Stock Production-12

DATE OF LAST REVISION: REVISION 12, March 7, 2016

NUMBER OF PAGES IN DOCUMENT: 6

QUALITY MANAGER

APPROVAL: Jessica Patterson **DATE:** March 7, 2016

LABORATORY / TECHNICAL MANAGER

APPROVAL: Shawn Verhoeven **DATE:** March 7, 2016

DATE REVIEWED:

- **The approval of this document is valid for one year at which time it will be subject to review to determine if any updates or modifications are warranted**

STANDARD OPERATING PROCEDURE FOR PREPARING AND STORING CONCENTRATED BACTERIOPHAGE

Note: This is a proprietary procedure

1.0 SUMMARY:

1.1. Bacteriophage stock preparations typically result in concentrations that range from approximately 1 × 10^{10} pfu per mL to 2 × 10^{12} pfu per mL. Long term storage of the prepared parent/daughter stock spiking suspension is at -76°C.. Working QC stocks are stored at 4°C. All prepared stocks (both "parent" and "daughter") are evaluated using a 4-point collimated beam for Quality Assurance purposes, following **SOP#53, Collimated Beam Analysis**. "Parent" stock is the first generation from the culture obtained directly from ATCC (America Type Culture Collection), or another appropriate standard primary microorganism culture collection, and "daughter" stocks are all subsequent generations obtained from that parent culture.

2.0 PROCEDURE:

2.1. Every effort must be made to ensure that the preparation and manipulation of concentrated phage stocks is separated by time and space from the enumeration of environmental or study samples.

2.1.1. Whenever possible, preparation and manipulation of all concentrated phage stocks should be done on days when sample enumeration for phage is not taking place.

2.1.2. All manipulations of the phage suspension are conducted in the Receiving Bay area.

2.1.3. The transfer of high titre phage solutions must be done with micropipettors using filtered tips, or using pipettors labelled with "high titre phage only". All equipment and surfaces must be thoroughly disinfected with 70% isopropanol or 2% Amway Pursue solution both before and immediately after use, as per **SOP#59, Disinfection of Laboratory Bench Surfaces, Biosafety Cabinets and Laboratory Fume Hood**. A top loading balance is used when balancing centrifuge tubes for phage preparation. The balance must be thoroughly disinfected after use.

2.1.4. Processing of environmental or study samples is conducted on the centre island bench of the main lab. Three workstations are in place for processing phage samples. When possible, phage stock solutions, controls and other samples known to contain high concentrations of phage should be processed at a separate station and using separate equipment from those samples known to contain low concentrations of phage. Alternatively, they may be processed at the end when all other samples are done. Separate pipettors are labelled for use with host culture or phage samples only.

***Note:** All culture transfers must be recorded in the GAP Culture Collection binder, as per **SOP#37, Culture Collection Maintenance**.*

2.1.5. Minor differences between each of the six bacteriophage preparations are summarized in **Tables 1, 2** and **3**. *E. coli* host and incubation requirements are summarized.

Table 1: Summary of bacteriophages and corresponding *E. coli* hosts

Bacteriophage Name	Classification	GAP QC Culture #	ATCC No.	*E. coli* Host Name	ATCC No.	GAP QC Culture No.
MS2	F+ male specific	103	15597-B1	*E. coli* Hfr (c-3000) or *E. coli* K-12	15597 23631	40 203
Q-Beta	F+ male specific	204	23631-B1	*E. coli* K-12	23631	203
T7	Somatic	233	11303-B38	*E. coli* BL21	BAA-1025	232
T1	Somatic	234	11303-B1	*E. coli* B	11303	232
PhiX174	Somatic	174	13706-B1	*E. coli* C	13706	25
T1UV	Somatic	235	GAP Isolated	*E. coli* CN13	700609	199

Table 2: Appropriate growth medium

Bacteriophage Name	Growth Broth (Day 2, step 1)
MS2	TSB
Q-Beta	TSB
T7	TSB
T1	TSB
PhiX174	TSB
T1UV	TSB

Table 3: Summary of typical growth conditions for bacteriophages

Bacteriophage Name	*E. coli* host	Amount of *E. coli* host	Concentration of bacteriophage for spike (pfu/mL)	Volume of bacteriophage spike	Time of bacteriophage spike
MS2	*E. coli* Hfr	10 mL	$5x10^{11}$-$1x10^{12}$	1 mL	4.5 hrs
MS2	*E. coli* K-12	10 mL	$5x10^{2}$-$1x10^{3}$	1 mL	1.0 hrs
Q-Beta	*E. coli* K-12	10 mL	$1x10^{12}$	2 mL	4.5 hrs
T7	*E. coli* BL21	20 mL	$3x10^{10}$	1 mL	4.5 hrs
PhiX174	*E. coli* C	10 mL	$1x10^{10}$	1 mL	4.0 hrs
T1UV	*E. coli* CN13	10 mL	$5x10^{10}$-$1x10^{11}$	1 mL	4.5 hrs

2.2. Preparation of the Host (Day 1)

2.2.1. Inoculate *Escherichia coli* host culture (**Table 1**) from the working stock plate into 50 mL of Modified ISO Tryptone Yeast Extract Glucose Broth (TYGB). This is enough to inoculate up to 5 to 6 L of broth culture (see Day 2, step 3).

2.2.2. Incubate the inoculated culture stationary at 35±0.5°C for 18 hours.

2.3. Preparation of Bacteriophage Culture (Small Scale)

2.3.1. Allow the broth to warm to room temperature (at least overnight).

2.3.2. Aseptically transfer 1 L to 1.5 L of sterile broth for growth (refer to **Table 2** for the appropriate broth) into a sterile 4 L flask, using aseptic technique to avoid contamination.

2.3.3. Add 10mL of glucose/calcium chloride solution to each litre of broth.

2.3.4. OPTIONAL If preparing MS2, 10mL of 0.1% Thiamine solution can be added to each flask.

2.3.5. Aseptically transfer 10 mL (refer to **Table 3**) of the 18 hour *E. coli* host culture into the 4 L flask containing the appropriate broth.

2.3.6. Place the flask on the shaker in the 35±0.5°C incubator.

2.3.7. Turn on the shaker to a speed of approximately 100 rpm.

2.3.8. Remove a stock vial of the appropriate bacteriophage (refer to **Table 1**) from the -76°C freezer. The concentration of the stocks range from 10^{10} to 10^{12} pfu/mL.

Note: *Ensure that the phage manipulation steps are done at the designated preparation bench.*

2.3.9. Allow the bacteriophage culture to warm to room temperature.

2.3.10. Dilute the bacteriophage stock to the appropriate concentration (refer to **Table 3**).

2.3.11. Aseptically transfer the contents of the pre-warmed vial into the 4 L flask containing 1 L of *E. coli* host culture at the appropriate time (refer to **Table 3**).

2.3.12. Continue to incubate the inoculated culture at 35±0.5°C for 18-24 hours.

Note: *For all media transfers, use only the pipettor labelled "high titre phage only".*

2.3.13. Remove the 4 L flask from the shaker and combine all similar type phage stock to the same flask and mix completely. Dispense the broth into separate 250mL conical centrifuge tubes, and balance the centrifuge tubes as described in **SOP#7, Operation of the Damon IEC DPR-6000 Centrifuge**.

2.3.14. Place the tubes in the DPR-6000 centrifuge, and centrifuge at 3,600 rpm for 30 minutes.

2.3.15. After centrifugation, carefully decant the supernatant from all the centrifuge tubes into a sterile carboy.

2.3.16. Autoclave and discard the bacterial pellets.

2.4. OPTIONAL: Filtration of Bacteriophage Stock:

2.4.1. For all phage types smaller than 0.05 µm (MS2, Phi-x174, Q-beta, and T7) filter the supernatant produced in Section 2.3 in series through a 0.45 µm cartridge filter, followed by filtration through a 0.2 µm cartridge filter (FiltaMax).

2.4.2. For phage types larger than 0.05 µm, the centrifuged supernatant is filtered through a 1.2 µm cartridge filter.

3.0 BATCH RECORDS:

3.1. Label each bottle of concentrated bacteriophage with an inventory control number, including the date of preparation and bottle number (for example MS2.07.01.29). Also, label the bottle with the initials of the analyst who prepared the concentrate.

3.2. Use the Bacteriophage Method (**BACTPHAGE-0001**) to determine the phage concentration per litre in each 1L bottle of concentrated bacteriophage. Ensure that enumeration of high titre phage stocks is done at a separate station from low titre environmental or study samples.

3.3. Store the bottles of filtered, concentrated bacteriophage in the sample walk-in refrigerator at 4°C for up to 3 months.

3.4. To ensure that the bacteriophage is performing properly, perform a 4 point collimated beam analysis (refer to **SOP#53, Collimated Beam Analysis**) to ensure the resulting stock falls within the GAP internal quality control bounds.

3.5. A Certificate of Analysis (C of A) for each batch of prepared phage is generated that illustrates the UV dose-response using GAP-F-88. These can be provided to clients with the purchase of stocks if requested. No stock is to be provided to the client that has not passed QC.

4.0 HISTORY OF CHANGES:

4.1. Revision 6 – November 19, 2007

4.1.1. Minor formatting changes were made. The **History of Changes** and **Reference** Sections were added. Reference to the GAP Form #s was also made.

4.1.2. The procedure describing the scale-up production (10 L) of bacteriophage was added.

4.1.3. Media recipes were removed. Analysts may refer to the Media Recipes Binder when preparing media.

4.1.4. Revised to reflect company name change.

4.1.5. Section 2.3.9. was updated to reflect the addition of the glucose/calcium chloride solution just prior to bacteriophage addition.

4.2 Revision 7 – June 19, 2008

4.2.1 Revision 7, was reviewed and no changes were required.

4.3 Revision 8 -April 14, 2009

4.3.1 Ultra low freezer has been purchased and the long storage cultures are stored in the -76°freezer instead of the -20°C freezer.

4.3.2 New Table 3 was added to summarize typical growth condition for bacteriophages.

4.3.3 Currently we do not measure the culture absorbance because we have determined the appropriate time for the addition of the culture. Section 2.3 has been removed.

4.3.4 The addition of glucose/calcium chloride in Section 2.3 is added after 30 minutes instead of 15 minutes prior to the addition of the bacteriophage.

4.4 Revision 9- July 6, 2009

4.4.1 SOP was reviewed and a few grammatical changes were required.

4.5 Revision 10 – Jan 26, 2010

4.5.1 Section 2.3 was revised to include the current practice at GAP. More specifically, the addition of glucose/calcium chloride solution to each litre of broth occurs prior to addition of host bacteria.

4.6 Revision 11 – Jan 28, 2010

4.6.1 Section 2.3 was revised to include the addition of 0.1% Thiamine solution when producing MS2.

4.7 Revision 12 – March 7, 2016

4.7.1 Two steps were changed to "Optional" steps, Section 2.3.4 and Section 2.4.

4.7.2 Section 1.1 added the option to use a culture collection other than ATCC, the University of Laval culture collection has a number of phage isolates that may be of value to GAP in the future.

4.7.3 TSB is now used instead of TYGB in producing stocks as it is easier to produce and does not produce stocks that vary in QC criteria.

4.7.4 Specific numerical values presented in Section 2.3 were changed to provide alternatives as specific values are not necessarily required.

4.7.5 Section 3.0 changed to note that batch certificates can be provided to clients on request and that no stocks that do not pass QC should be sent to clients.

5.0 **REFERENCE**:

5.1. In-house GAP EnviroMicrobial Services Standard Operating Procedure. This is a proprietary procedure.

Appendix D

COLLIMATED BEAM PROCEDURES, UV RADIOMETER CALIBRATION CERTIFICATES

GAP EnviroMicrobial Services Ltd.

APPROVAL FORM FOR RELEASE OF
ANALYTICAL STANDARD OPERATING PROCEDURE (SOP) FOR ROUTINE USE

SOP #53:
COLLIMATED BEAM ANALYSIS

COMPUTER FILE NAME: 53-SOP-Collimated Beam-12

DATE OF LAST REVISION: REVISION 12, Nov 10, 2015

NUMBER OF PAGES IN DOCUMENT: 10

QUALITY MANAGER

APPROVAL: Jessica Patterson DATE: Nov 10, 2015

LABORATORY / TECHNICAL MANAGER

APPROVAL: Conrad Odegaard DATE: Nov 10, 2015

DATE REVIEWED: Mar 8, 2016, August 28, 2017

- **The approval of this document is valid for one year at which time it will be subject to review to determine if any updates or modifications are warranted.**

STANDARD OPERATING PROCEDURE FOR COLLIMATED BEAM ANALYSIS

1.0 PURPOSE:

1.1. Ultra Violet (UV) disinfection systems are typically validated using bioassays. Biodosimetry uses standardized test strains and procedures to quantify the inactivation of microorganisms by UV light. UV systems for treating both drinking water and wastewater can be analyzed using these methods. The UV system is typically seeded with a surrogate microorganism, samples are taken before and after treatment, and a log inactivation is calculated. At the same time, a dose-response curve is generated using a collimated beam apparatus on the influent test water. The UV dose delivered by the test system can then be calculated by interpolation from the dose-response curve and the particular log reduction achieved during the test run.

1.2. This SOP describes the procedure for collimated beam analysis. Dose response curves are typically produced on drinking water inoculated with a bacteriophage, such as MS2 or T1UV, or with *Bacillus* spores. For wastewater, the dose response of indigenous bacteria is usually performed, using fecal indicators such as total coliforms, fecal coliforms, *E. coli* or *Enterococci*.

2.0 METHOD:

Safety Note: *UV light can cause severe damage to the eyes and exposed skin. Ensure that eye and skin protection are used when the UV light for the collimated beam apparatus is on. Eye shields that block UV light, a laboratory coat and protective gloves should be used. When the lamp is on, but measurements are not being taken, put the blocking shield in place at the base of the column, to prevent light exposure.*

2.1. Equipment Required

- 2.1.1. Lab timer
- 2.1.2. Glass petri dishes
  - 2.1.2.1. 5.0cm diameter glass petri dishes for sample volumes up to 15 mL
  - 2.1.2.2. 8.5cm non-reflective petri dishes volumes of 50mL to 200mL
- 2.1.3. Sterile sample containers without sodium thiosulphate
  - 2.1.3.1. 15mL or 50mL centrifuge tubes
  - 2.1.3.2. 300mL or 500mL PET sample bottles when required due to sample volume
- 2.1.4. Magnetic stir bars
  - 2.1.4.1. 7x2 mm, VWR cat No. 58948-976 (for use in 5.0cm diameter petri dishes)
  - 2.1.4.2. 15x1.5 mm, VWR cat No. 58948-411 (for use in 5.0cm diameter petri dishes)
  - 2.1.4.3. 30x3mm, Big Science Inc cat No. SBM-3003-MIC (for use with 8.5cm non-reflective petri dishes)
- 2.1.5. 90% Ethanol

2.1.6. Sterile pipettes or graduated cylinders

2.1.6.1. Sterile 10mL or 25mL pipettes or 50 mL or 100 mL sterile graduated cylinders may also be used as appropriate for sample volume requirements.

2.1.7. Safety goggles (that provide UV protection)

2.1.8. Spectrophotometer

2.1.8.1. HACH DR/4000U or Ultrospec 3300 Pro

2.1.9. Potassium dichromate, holmium oxide, and rare earth standards for spectrophotometer calibration

2.1.10. Quartz cuvettes (1 cm and 5cm path length)

2.1.11. Purelab Ultrapure Deionized water

2.1.12. Collimated beam apparatus

2.1.13. Magnetic stir plate, with 0.5 cm grid markings on surface

2.1.14. Calibrated Radiometers and photodetector

2.1.14.1. IL1700, ILT1700 or ILT1400A (International Light)

2.1.14.2. X9-11 (Gigahertz Optik)

2.1.15. Computer installed with spreadsheet program Fluence-LP-Calculation template.xls [Modified from the Program developed by Dr. J. Bolton, Bolton Photosciences, Germicidal fluence (UV dose) calculations for a low pressure UV lamp (shallow), Dec. 03, 2002]. The template for this form is found on the GAP Quality System in the Forms QM folder as GAP-F-92 – FLUENCELPCALCULATIONREV_.

2.2. Equipment Notes

2.2.1. UV lamp: The collimated beam apparatus contains a low pressure UV lamp (Philips UVC TUV 30W/G30T8, lot number 9280395040 4M916-66707). The lamps should be burned for 100 hours before use. The lamps will last approximately 3000 hours, and must be replaced when the intensity drops below 50% of the initial output.

2.2.2. The UV lamps must be wiped down every 6 months using Kimwipes (Science Brand, Kimberly-Clark) to remove surface dust. The time span may be adjusted based on necessity.

2.2.3. The photo-detector probe and radiometer must be calibrated each year using NIST traceable standards. Calibration certificates are located in the Quality Assurance files. Ensure that the radiometer has been standardized with the PIR (Peak Irradiance Response Sensitivity Factor as stated on the calibration certificate of the photodetector probe that is being used).

2.2.4. Collimated beam design: Figure 1 below shows the design of the collimated beam apparatus. No collimating tube is present in GAP's design with a series of apertures used to ensure the UV light is incident on the suspension surface.

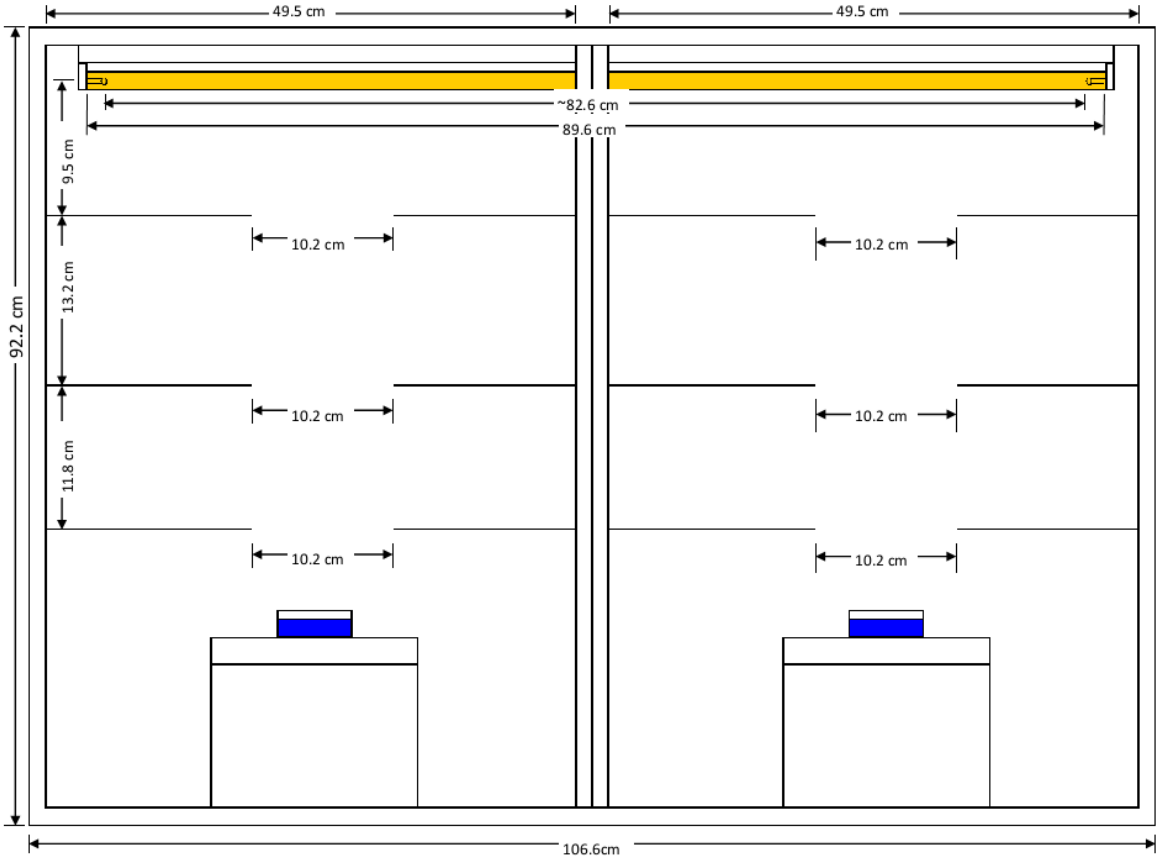

Figure 1: Schematic outlining the dimensions of GAP's collimated beam apparatus. Three apertures are present that are aligned directly above each other, all with a diameter of 10.2 cm.

2.2.5. For UV intensity measurements, the radiometer settings are as follows:

2.2.5.1. display button – red light on "data"

2.2.5.2. DC – red light on

2.2.5.3. Auto-range – red light on

2.2.5.4. 5V Bias light is ON (or leave 5V bias off if the calibration certificate states that the calibration was performed with the 5V bias off)

2.2.5.5. To check or change the PIR sensitivity factor, press the display button until the "factor shift" light is on. Press the factor select button, and toggle through or change the settings. To continue with radiometer readings, press the display button again until the red light is on "data".

2.3. Sample Measurements Using the Spectrophotometers

2.3.1. Operate the spectophotometer following **SOP#55, Operation of the HACH DR4000U Spectrophotometer** or **SOP#106 , Operation of the Ultrospec 3300 Pro**.

2.3.2. Turn on the spectrophotometer, set the wavelength for 253.7nm, and allow the lamp to warm-up.

2.3.3. Check the calibration of the spectrophotometer as follows:

2.3.3.1. Measure the absorbance of the Starna potassium dichromate standard (relative to the Starna blank) at the following wavelengths: 235, 257, 313, and 350nm. Confirm each measurement is within the limit of uncertainty stated on the calibration certificate and on GAP-F-86 specific to each spectrophotometer. Record the results of the verification on GAP-F-86. This is to be completed weekly on the spectrophotometer when used to analyze samples for Collimated Beam Analysis.

2.3.3.2. Scan the Starna holmium oxide standard over the range of wavelengths 235 nm through 285 nm. Locate the peaks and confirm each location is within the limit of uncertainty stated on the form GAP-F-86 specific to each spectrophotometer. Record the results of the verification on GAP-F-86. This is to be completed weekly on the spectrophotometer when used to analyze samples for Collimated Beam Analysis.

2.3.3.3. Scan the Starna rare earth standard over the range of wavelengths 235 nm through 285 nm. Locate the peaks and confirm each location is within the limit of uncertainty stated on the form GAP-F-86f for the HACH DR4000U or form GAP-F-86 specific to each spectrophotometer. Record the results of the verification on GAP-F-86. This is to be completed weekly on the spectrophotometer when used to analyze samples for Collimated Beam Analysis.

2.3.3.4. Verify that the water that is used to zero the spectrophotometer has an A253.7 value that is within 0.002/cm of a certified zero absorbance solution, such as reagent grade, organic free water that has been certified by the supplier to have zero UV absorbance. Record the results on the verification form (GAP-F-86).

2.3.3.4.1. A bottle of DI Water, sterilized and stored in an amber bottle at room temperature, can be used to zero the unit and is checked against the certified zero absorbance solution once per week when the Collimated Beam Analysis is being performed.

2.3.4. Measure the percent transmittance of the sample as follows:

2.3.4.1. Rinse a clean quartz cuvette (5 cm path length) several times with Purelab Ultrapure water. If the sample has a low percent transmittance (<90% per cm), use the 1 cm quartz cuvette. Measurements made with a 5cm cuvette can be converted to 1 cm UVT measurements using the following equation:

$$UVT_{1\text{-}cm}=UVT_{5\text{-}cm}{}^{1/5}$$

2.3.4.2. To the clean quartz cuvette, add Purelab Ultrapure Deionized water and carefully wipe the outside of the cuvette. Make sure the cuvette is warm enough so that condensation does not form on the outside of the cuvette.

2.3.4.3. Place the cuvette in the holder with the marking facing left or right. Use this to zero the spectrophotometer.

2.3.4.3.1. Ensure the marking remains in the same orientation for all subsequent measurements.

2.3.4.4. Mix the sample bottle gently by inversion as to not produce air bubbles in the sample.

2.3.4.5. Rinse the cuvette three times with the sample.

2.3.4.6. Add sample to the cuvette and wipe the outside of the cuvette. Make sure the cuvette is warm enough so that condensation does not form on the outside of the cuvette.

2.3.4.7. Place the cuvette in the holder with the marking in the same orientation as in 2.3.4.3.

2.3.4.8. Measure and record the sample % transmittance or absorbance at 253.7nm per cuvette path length.

2.3.4.9. Convert the % transmittance measurement value to absorbance per 1cm.

2.4. Collimated Beam Procedure:

2.4.1. Turn the UV lamp on to warm-up for at least 30 minutes before readings are taken.

2.4.2. Each sample to be irradiated is given a sample number and recorded on the bench sheet (GAP-F-7), as per **SOP#24, Sample Traceability, Documentation and Validation**.

2.4.3. Ensure that the correct radiometer settings and photodetector calibration factor are selected (see **Section 2.2, Equipment Notes**).

2.4.4. Turn on the radiometer. Remove the lid from the probe, and place the probe on the stir plate centered on the grid.

2.4.5. Place the UV light shield in place on the collimated beam apparatus. Zero the radiometer.

2.4.6. Open the form GAP-F-92 – FLUENCELPCALCULATIONREV_, and follow the instructions listed on the “fluence calculations” worksheet.

2.4.7. The petri factor is measured as follows:

2.4.7.1. Lower the magnetic stir plate to the measurement or dosing height.

2.4.7.2. Check to ensure the stir plate is level.

2.4.7.3. Measure the UV intensity at 0.5 cm increments along the x and y axis using the grid marked on the stir plate, and as described in the “petri factor” worksheet.

2.4.7.4. Enter the data directly into the Excel worksheet (GAP-F-92).

2.4.7.5. Enter the petri plate diameter (in cm).

2.4.8. On the “fluence calculations” worksheet (GAP-F-92), enter the required information into the highlighted cells, as all other cells are protected. The data required includes:

2.4.8.1. Sample volume

2.4.8.2. Stir bar volume

2.4.8.3. Distance from lamp to sample surface

2.4.8.4. UV absorbance per 1 cm of sample (see Section 2.3.4.).

2.4.8.5. Sample description including sampling dates and project numbers

2.4.9. Accuracy of the radiometer must be verified using two additional radiometers at the beginning and end of each sample session.

2.4.9.1. Before starting a collimated beam test take readings of the three radiometers during exposure to the UV light, ensuring that all radiometers are on the same plane of calibration on the magnetic stirrer.

2.4.9.2. Record the readings on Form (GAP-F-92), and record the C-series number in the appropriate cell for each radiometer used.

2.4.9.3. The radiometers readings should not differ more than 5%.

2.4.9.4. The radiometer selected as the “Test Radiometer” is to be used to take all UV intensity readings throughout testing, as a correction factor is applied based on the average readings recorded in 2.4.9.1.

2.4.9.5. Repeat steps 2.4.9.1. to 2.4.9.3. after the last sample is dosed.

2.4.10. The UV Dose is applied to the sample(s) as follows:

2.4.10.1. For each sample, enter the radiometer reading at the center of the petri dish (µW/cm^2). Note that a unit conversion (decimal place moved) may be required as the radiometer may display in different units such as W/cm^2.

2.4.10.2. Enter targeted dose value on (GAP-F-92).

2.4.10.2.1. The resulting exposure time for the targeted dose will be displayed, rounded to the nearest second.

2.4.10.3. Mix the sample and dispense a volume of sample into a sterile petri dish. Place the petri dish on the magnetic stir plate, and ensure that it is centered on the grid.

2.4.10.4. Remove a magnetic stir bar from the ethanol solution using forceps, and rinse well with Purelab Ultrapure Deionized water.

2.4.10.5. Place a sterile magnetic stir bar in the petri dish and set the stir plate to speed that ensures good mixing of the sample but not a speed that creates a vortex in the sample.

2.4.10.6. Adjust the height of the petri dish sample such the surface of the liquid is at the same height as the probe’s center point intensity measurement. Check the probe's calibration certificate to determine the calibration plane.

2.4.10.7. Set the timer for the calculated dose time.

2.4.10.8. Simultaneously start the timer and remove the light shield.

2.4.10.9. Replace the light shield at the end of the exposure time.

2.4.10.10. Remove the sample and record the center point intensity in the 'after exposure' column. The fluence LP program will calculate the corrected dose (or fluence) for the sample.

2.4.10.10.1. The corrected fluence is calculated from the average of the before and after radiometer readings along with the true exposure time (rounded to the nearest second) according to Equation 1 outlined below.

$$D = CF_R \times I_A \times P_f \times (1-R) \times \frac{L}{d+L} \times \frac{1-10^{-Ad}}{Ad\ln(10)}$$

Equation 1: D is the UV dose, CF_R is the correction factor applied to the dose to correct for the average of the three radiometer readings, I_A is the average UV intensity measured using a radiometer at a location corresponding to the center of the surface of the sample, P_f is termed the Petri factor defined as the ratio of the UV intensity measured at the center of the sample surface to the average intensity measured across the sample surface, 1-R is termed the reflection factor where R is the reflection of UV light at 253.7 nm at the air-surface interface (typically R = 0.025), L/(d+L) is termed the divergence factor where L is the distance from the lamp centerline to the sample surface and d is the sample depth, and $(1-10^{-Ad})/(Ad\ln(10))$ is termed the absorbance factor where A is the UV absorbance coefficient at 253.7 nm of the suspension.

2.4.10.10.2. Ensure that the intensity measurement before and after exposure does not exceed 5%.

2.4.10.11. Transfer the irradiated sample into a sterile centrifuge tube. Label the tube with a minimum of the sample number and UV dose.

2.4.10.12. Place the magnetic stir bar back into the ethanol solution.

2.4.10.13. Repeat Section 2.4.10. for each dose required.

2.4.11. The zero dose samples must be handled in the same way as the dosed samples, but without exposure to the UV lamp.

2.4.11.1. The zero dose samples must remain on the stir plate with a stir bar mixing for at least 30 seconds with the light shield in place.

2.4.12. Save the completed form (GAP-F-92) in the Projects Folder on the I: drive in appropriate project folder.

2.4.13. Following irradiation, samples must be stored in the dark at 4±2°C until analysis.

2.4.13.1. Analyze samples as per BACTPHAGE-0001.

3.0 HISTORY OF CHANGES:

3.1. Revision 4 – February 23, 2007

3.1.1. Minor formatting changes were made. The **History of Changes** and **Reference** Sections were added.

3.1.2. Reference to the calibration of the HACH DR4000U using the Starna Standards was added, as well as the GAP Form #s for the recording of data, as per the Corrective Action Report – 01-23-07.

3.1.3. The method was updated to reflect current practices, equipment, and equipment set up and verification, following the EPA Ultraviolet Disinfection Guidance Manual for the Final Long Term 2 Enhanced Surface Water Treatment Rule.

3.2. Revision 5 – November 21, 2007

3.2.1. Section 2.3.3 was updated to reflect the limits of the Starna Standards for the calibration check of the HACH DR 4000U Spectrophotometer. Please see Corrective Action Report - ####.

3.2.2. Section 2.3.3. was updated to include that a bottle of sterilized DI Water, stored in an amber bottle, is to be checked against the certified organic free water, at least once per week.

3.2.3. Minor grammatical and formatting changes.

3.2.4. Company name change was revised.

3.3. Revision 6 - August 13, 2008

3.3.1. Revision 6, was reviewed and no changes were required.

3.4. Revision 7 – April 14, 2009

3.4.1. Section 2.3 includes the addition of the Ultrospec 3300 Pro spectophotometer for use. Different calibration forms are required for this spectophotometer as explained in this section.

3.4.2. Section 2.4.9, the accurancy of the radiometer is verified by two radiometers instead of one.

3.5. Revision 8 – Dec 30, 2009

3.5.1. Section 2.2.1 was updated to include the make, model and lot number of the bulbs used for collimated beam analysis.

3.6. Revision 9 – Jan 7, 2011

3.6.1. SOP was revised due to recent findings that a difference exists in the dose response curves for bacteriophage when irradiating 10mL samples using a 4.97cm diameter by 1.70cm tall glass petri dish compared to irradiating 50mL samples using a 8.54cm diameter by 4.90cm tall glass petri dish using the collimated beam analysis at GAP. Through experimentation at GAP and theoretical models proposed by Carollo Engineers, it has been determined that taller petri dishes are increasing the amount of UV light (UV dose) being applied to the surface of samples due to reflection off the petri dish sides. This is less of an issue in the 10mL irradiations, as there is a smaller amount of exposed glass above the solution surface available for reflection to increase the UV dose. A correction factors for T1UV and T7 have been generated and are 1.1118323 and 1.0720978, respectively. These factors are independent of ultraviolet transmittance (UVT) levels which were verified by experimentation using T7 that showed that there was not a significant difference between the dose response curves generated at different UVT levels using either of the petri dish sizes. It has been confirmed that no additional correction factors are required.

3.6.2. Section 1.2 was updated to include T1UV instead of PhiX 174. Non-reflective 8.5cm diameter petri dishes were included Section 2.1.2.1. Large stir bars (30x3mm) were added to Section 2.1.4. UV bulbs were replaced on May 4, 2010; the lot number was updated in Section 2.2.1. References to spectrophotometer readings taken at 254nm were changed to 253.7nm in Section 2.3 to reflect current protocol.

3.7. Revision 10 – March 14, 2011

3.7.1. Section 2.1.6 updated to allow for the use of pipettes and graduated cylinders of volumes other than 10 mL.

3.7.2. Section 2.1.9 Added a reference to the use of a Rare Earth Starna Standard for the spectrophotometer calibration verification.

3.7.3. Section 2.2.3 added a description of the collimated beam apparatus including Figure 1 where a diagram is present.

3.7.4. Section 2.3.3.2 now uses a range of 235 – 285 nm to encompass the wavelengths of interest in the collimated beam testing (253.7nm)

3.7.5. Section 2.3.3.3 explains the calibration verification using the rare earth standard

3.7.6. Section 2.4.8 explains how stir bar volume and sample description must also be recorded.

3.7.7. Section 2.4.10.10 added an explanation of how the UV fluence is calculated.

3.7.8. Section 2.4.11.1 allows for zero doses to be stirred unexposed for a minimum of 30 seconds as many collimated beams have exposure times of less than 1 minute.

3.8. Revision 11 – March 13, 2015

3.8.1. Section 2.1 was re-arranged to clarify the options for petri dishes, volume measurement, sample containers, and stir bars. The way this section was laid out in the past caused some confusion, no methodological changes here.

3.8.2. Added Gigahertz Optik radiometer to section 2.1.14

3.8.3. Updated Figure 1 and remove references to specific distances from lamp to sample surface, the distance is taken into account in the dose equation so an exact value does not need to be stated.

3.8.4. Section 2.3.3 updated to remove specific references to tabs in an Excel spreadsheet for the calibration verification of the spectrophotometers.

3.8.5. Section 2.3.4 had the method for taking spectrophotometer measurements updated. Previously it stated writing must face left; this is not necessary, it must face left or right as long as the orientation remains constant between the zero reading and the sample reading.

3.8.6. Section 2.3.4.8 was changed to say % transmittance OR ABSORBANCE readings are allowed, both units of measurement provide the same results.

3.8.7. Section 2.4.8 had "blue cells" changed to "highlighted cells" in the fluence spreadsheet.

3.8.8. Section 2.4.10.1 adds a note to ensure that the analyst converts any readings that may be output by a radiometer to the correct units required in the fluence spreadsheet.

3.8.9. Section 2.4.10.5 had a redundant sentence removed.

3.8.10. Section 2.4.10.11 removed the requirement for the date to be written on each sample tube.

3.8.11. Section 2.4.12 was updated so that all fluence sheets are now saved with the project files, not in a separate fluence calculation specific folder.

3.8.12. Section 2.4. 13 had wording simplified so simply say analyze as per BACTPHAGE-0001.

3.9. Revision 12 – Nov 10, 2015

3.9.1. Section 2.2.2 was added to include wiping the UV bulbs every six months to remove surface dust. This was a result of a Preventive Action Report.

4.0 REFERENCES:

4.1. In-house GAP EnviroMicrobial Services Ltd. Standard Operating Procedure.

4.2. EPA, Ultraviolet Disinfection Guidance Manual for the Final Long Term 2 Enhanced Surface Water Treatment Rule. November 2006.

C230

InternationalLight
TECHNOLOGIES

CALIBRATION CERTIFICATE

ELECTRICAL INSTRUMENTATION CALIBRATION REPORT

DUE DATE: 30-Aug-18

This document states that the instrument described below meets or exceeds all manufacturer specifications. The calibration results published in this certificate were obtained using equipment capable of producing results that are traceable to NIST and through NIST to the International System of Units (SI). ILT is Accredited to ISO/IEC 17025:2005. Calibration conforms to ANSI/NCSI Z540.1-1994 and ANSI/NCSI Z540.3-2006.

Date: 30-Aug-17 Certificate #: 1708301404E SO#: 158049

Temp: 24 Degrees C Humidity: 47 % Procedure: TP-0113:08NOV2011

Rendered To: GAP Enviromicrobial Services

InstrumentModel-S/N: IL1700 #4246

Calibration/Repair Remarks: None

Parts (If Needed): None

As Found Tolerance		As Found Readings	As Found Permissible Error	Applied Current	Adjusted Readings	Permissible Adjustment Error	As Left Tolerance	
In	Out						In	Out
☑	☐	9.99E-4	+/- 0.5%	1.000E-3	1.000E-3	+/- 0.2%	☑	☐
☑	☐	1.000E-4	+/-0.5%	1.000E-4	1.000E-4	+/- 0.2%	☑	☐
☑	☐	9.99E-6	+/-0.7%	1.000E-5	9.99E-6	+/- 0.2%	☑	☐
☑	☐	1.001E-6	+/-1.0%	1.000E-6	1.000E-6	+/- 0.2%	☑	☐
☑	☐	1.000E-7	+/-1.0%	1.000E-7	9.99E-8	+/- 0.5%	☑	☐
☑	☐	1.002E-8	+/-1.0%	1.000E-8	1.001E-8	+/- 0.5%	☑	☐
☑	☐	9.98E-10	+/-1.0%	1.000E-9	1.001E-9	+/- 0.5%	☑	☐
☑	☐	9.95E-11	+/-1.5%	1.000E-10	1.002E-10	+/- 1.0%	☑	☐

Tolerance after repair and/or calibration: ☑ In ☐ Out

Measurement Uncertainty: 1mA=±0.065%, 100uA=±0.062%, 10uA=±0.062%, 1uA=±0.065%, 100nA=±0.073%, 10nA=±0.079%, 1nA=±0.084%, 100pA=0.26%

The above Instrument was compared to the Keithley Current Calibrator/Source Model 263 S/N 0730631 calibrated on 3/30/2017. Calibration Due: 3/30/2018

Calibrated By:

Electrical Calibration Tech. Chris Kucy

This certificate applies only to the item identified and shall not be reproduced other than in full, without the specific written approval by International Light Technologies, Inc.

PJLA Calibration Accreditation# 66765

International Light Technologies, Inc.
10 Technology Drive, Peabody, MA 01960 USA
978-818-6180 / 978-818-6181 *fax*
intl-lighttech.com

C230

InternationalLight
TECHNOLOGIES

CALIBRATION CERTIFICATE

OPTICAL CALIBRATION CERTIFICATE

International Light Technologies certifies that the calibration results published in this certificate were obtained using equipment capable of producing results that are traceable to NIST and through NIST to the International System of Units (SI). ILT is Accredited to ISO/IEC 17025:2005. Calibration conforms to ANSI/NCSI Z540.1-1994 and ANSI/NCSI Z540.3-2006.

Rendered-to: GAP ENVIROMICROBIAL SERVICE

Detector: SED240 #5488

Input Optic: W #9854

Filter: N/A #

Misc.: QNDS2 #22469

Calibrated With: IL1700 #4246

+5V Bias On

(SUV) PEAK IRRADIANCE RESPONSE SENSITIVITY FACTOR AS CALIBRATED ON: 30-Aug-2017

1.245E-5 (A)(cm2)(W-1) assuming monochromatic irradiance at 254nm

1.245E-08 (A)(cm2)(mW-1) assuming monochromatic irradiance at 254nm

1.06% *Change In Sensitivity From Previous Calibration Dated: 11-Aug-2016

Tolerance As Found: ☑ In ☐ Out Tolerance As Left: ☑ In ☐ Out

Unit will read directly in watts per square centimeter or milliWatts per square centimeter when used with the sensitivity factor above. Calibration Due: 8/30/2018

REFERENCE PLANE Groove ONE formed by filter or diffuser elements and next element, counted from front surface of assembly.

*difference includes intrinsic detector change, NIST recertification updates, lab experimental error or modifications to the hardware adjustments.

PRIMARY STANDARD: U.S. National Institute of Standards and Technology Detector Response
I219 - December 3, 2015 - NIST Test No. 685/287304-15/2 : D204 - December 2, 2015 - NIST Test No. 685/287304-15/1

INTERNATIONAL LIGHT TECHNOLOGIES PRIMARY TRANSFER STANDARDS:

SED240 #1029 N/A N/A

ILT Transfer Uncertainty to Customer = +/- 6.5% plus NIST Uncertainty of: +/- 1%

LIGHT SOURCE: R-52G Mineralight UV Lamp

LAMP OUTPUT: 4.22E-4 W/cm2

INSTRUMENTATION: SED240 #1029/NS254 #25517/QNDS

PROCEDURE: OP-0036

TEMPERATURE: 22.2 degrees C

HUMIDITY: 44%

CALIBRATED BY:

Calibration Technician: Cathy Olson

THIS CERTIFICATE APPLIES ONLY TO THE ITEMS IDENTIFIED AND SHALL NOT BE REPRODUCED EXCEPT IN FULL, WITHOUT THE SPECIFIC WRITTEN APPROVAL BY INTERNATIONAL LIGHT TECHNOLOGIES, INC.

Calibration Date: 8/30/2017 Certificate No: 708308325 Sales Order #: 158049

ilac-MRA

PJLA Calibration Accreditation# 66765

International Light Technologies, Inc.
10 Technology Drive, Peabody, MA 01960 USA
978-818-6180 / 978-818-6181 *fax*
intl-lighttech.com

SUV SED240 #5488/QNDS2 #22469/W #9854

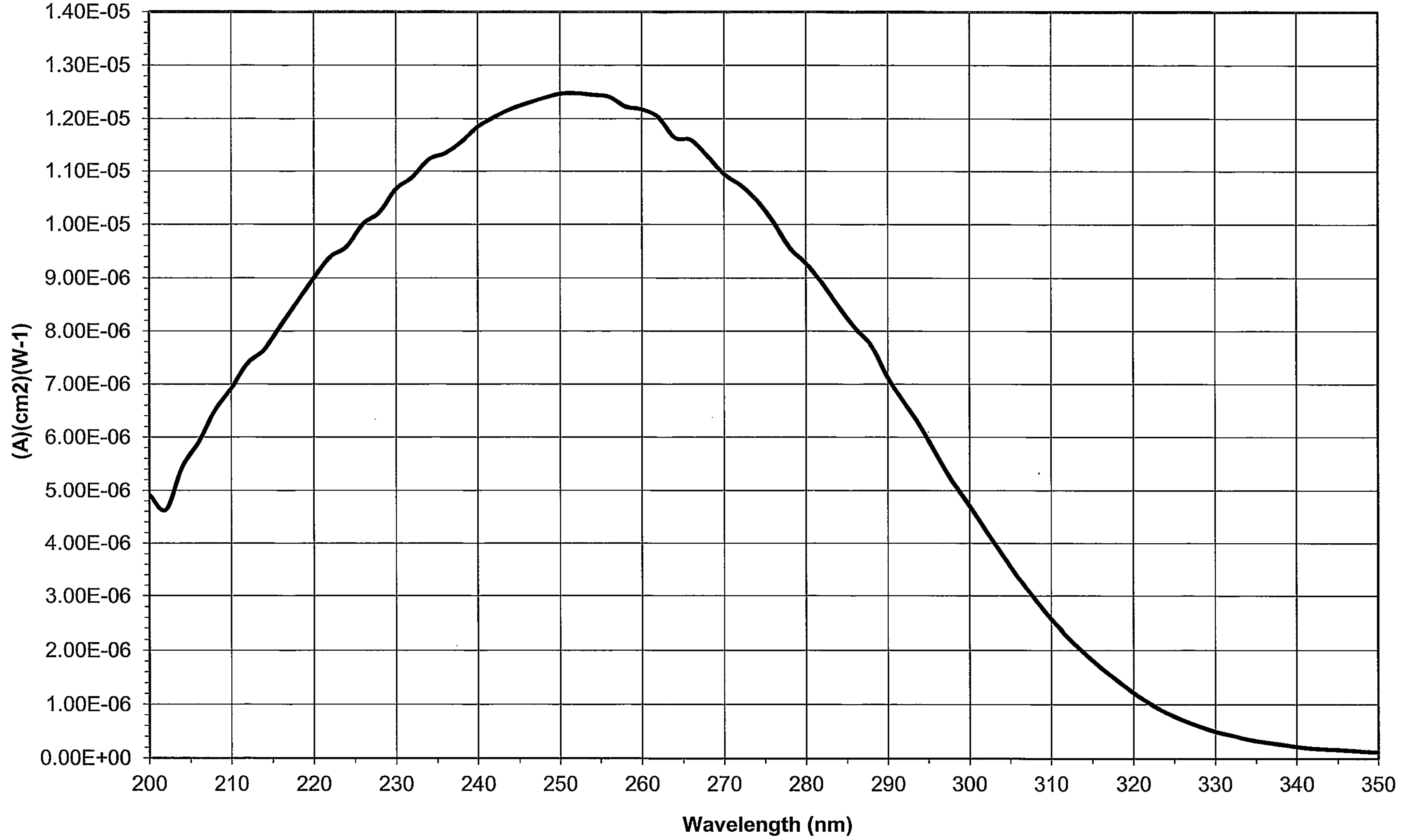

Certificate #708308325

30Aug17

Wavelength (nm)	(A)(cm2)(W-1)
298	5.160E-06
300	4.712E-06
302	4.240E-06
304	3.787E-06
306	3.336E-06
308	2.946E-06
310	2.575E-06
312	2.246E-06
314	1.951E-06
316	1.679E-06
318	1.444E-06
320	1.213E-06
322	1.016E-06
324	8.499E-07
326	7.152E-07
328	6.001E-07
330	4.988E-07
332	4.314E-07
334	3.546E-07
336	3.049E-07
338	2.653E-07
340	2.222E-07
342	1.890E-07
344	1.727E-07
346	1.569E-07
348	1.347E-07
350	1.188E-07

InternationalLight
TECHNOLOGIES

CALIBRATION CERTIFICATE

OPTICAL CALIBRATION CERTIFICATE

International Light Technologies certifies that the calibration results published in this certificate were obtained using equipment capable of producing results that are traceable to NIST and through NIST to the International System of Units (SI). ILT is Accredited to ISO/IEC 17025:2005. Calibration conforms to ANSI/NCSI Z540.1-1994 and ANSI/NCSI Z540.3-2006.

Rendered-to: GAP ENVIROMICROBIAL SERVICE

Detector: SEL240 #6498 Input Optic: TD #28814

Filter: NS254 #28012 Misc.: N/A #

Calibrated With: ILT1400A #8719

(PIR) PEAK IRRADIANCE RESPONSE SENSITIVITY FACTOR AS CALIBRATED ON: 22-Feb-2018

4.27E-5 (A)(cm2)(W-1) assuming monochromatic irradiance at 254nm
4.270E-08 (A)(cm2)(mW-1) assuming monochromatic irradiance at 254nm

0.00% *Change In Sensitivity From Previous Calibration Dated: 10-Feb-2017

Tolerance As Found: ☑ In ☐ Out Tolerance As Left: ☑ In ☐ Out

Unit will read directly in watts per square centimeter or milliWatts per square centimeter when used with the sensitivity factor above. Calibration Due: 2/22/2019

REFERENCE PLANE Groove ONE formed by filter or diffuser elements and next element, counted from front surface of assembly.

*difference includes intrinsic detector change, NIST recertification updates, lab experimental error or modifications to the hardware adjustments.

PRIMARY STANDARD: U.S. National Institute of Standards and Technology Detector Response
I219 - December 3, 2015 - NIST Test No. 685/287304-15/2 : D204 - December 2, 2015 - NIST Test No. 685/287304-15/1

INTERNATIONAL LIGHT TECHNOLOGIES PRIMARY TRANSFER STANDARDS:

U522 SED400 #1490 SED400 #139

ILT Transfer Uncertainty to Customer = +/- 6.5% plus NIST Uncertainty of: +/- 1% Confidence Level of Uncertainty is 95% (k=2)

LIGHT SOURCE: 6a Low Pressure Mercury LAMP OUTPUT: 7.00E-5 W/cm2
INSTRUMENTATION: SED240 #1029 PROCEDURE: OP-0017
TEMPERATURE: 21.1 degrees C HUMIDITY: 43%
CALIBRATED BY:
Calibration Technician: Cathy Olson

THIS CERTIFICATE APPLIES ONLY TO THE ITEMS IDENTIFIED AND SHALL NOT BE REPRODUCED EXCEPT IN FULL, WITHOUT THE SPECIFIC WRITTEN APPROVAL BY INTERNATIONAL LIGHT TECHNOLOGIES, INC.

Calibration Date: 2/22/2018 Certificate No: 802228901 Sales Order #: 159695

ilac-MRA

PJLA Calibration Accreditation# 66765

International**Light**
TECHNOLOGIES

CALIBRATION CERTIFICATE

ELECTRICAL INSTRUMENTATION CALIBRATION REPORT

DUE DATE: 21-Feb-19

This document states that the instrument described below meets or exceeds all manufacturer specifications. The calibration results published in this certificate were obtained using equipment capable of producing results that are traceable to NIST and through NIST to the International System of Units (SI). ILT is Accredited to ISO/IEC 17025:2005. Calibration conforms to ANSI/NCSI Z540.1-1994 and ANSI/NCSI Z540.3-2006.

Date: 21-Feb-18 Certificate #: 1802211406E SO#: 159695

Temp: 24 Degrees C Humidity: 44 % Procedure: TP-0116:11FEB2013

Rendered To: GAP Enviromicrobial Services

InstrumentModel-S/N: ILT1400A #8719

Calibration/Repair Remarks: None

Parts (If Needed): None

As Found Tolerance In	Out	As Found Readings	As Found Permissible Tolerance	Applied Current	Adjusted Readings	Permissible Adjustment Error	As Left Tolerance In	Out
☑	☐	302uA	-0.7% to 1.3%	300 uA	302uA	+/- 4 uA	☑	☐
☑	☐	100.0uA	+/-0.3%	100.0 uA	100.0uA	+/- .2 uA	☑	☐
☑	☐	9.99uA	+/-0.3%	10.00 uA	10.00uA	+/- .02 uA	☑	☐
☑	☐	1.000uA	+/-0.4%	1.000 uA	1.000uA	+/-.002 uA	☑	☐
☑	☐	100.2nA	+/-3.0%	100.0 nA	99.9nA	+/- .2 nA	☑	☐
☑	☐	10.04nA	+/-3.0%	10.00 nA	10.03nA	+/- .2 nA	☑	☐
☑	☐	1.01nA	+/-4.0%	1.00 nA	1.00nA	+/- .02 nA	☑	☐

Tolerance after repair and/or calibration: ☑ In ☐ Out

Measurement Uncertainty: 300uA=±0.20%, 100uA=±0.068%, 10uA=±0.062%, 1uA=±0.064%, 100nA=±0.065%, 10nA=±0.12%, 1nA=±0.22%. Confidence Level of Uncertainty is 95% (K=2).

The above Instrument was compared to the Keithley Current Calibrator/Source Model 263 S/N 0730631 calibrated on 3/30/2017 . Calibration Due: 3/30/2018

Calibrated By:

Electrical Calibration Tech. Chris Kucy

This certificate applies only to the item identified and shall not be reproduced other than in full, without the specific written approval by International Light Technologies, Inc.

Form F-094A Rev H Page 1 of 1

PJLA Calibration Accreditation# 66765

International Light Technologies, Inc.
10 Technology Drive, Peabody, MA 01960 USA
978-818-6180 / 978-818-6181 *fax*
intl-lighttech.com

C398

InternationalLight
TECHNOLOGIES

CALIBRATION CERTIFICATE

ELECTRICAL INSTRUMENTATION CALIBRATION REPORT

DUE DATE: 03-May-18

This document states that the instrument described below meets or exceeds all manufacturer specifications. The calibration results published in this certificate were obtained using equipment capable of producing results that are traceable to NIST and through NIST to the International System of Units (SI). ILT is Accredited to ISO/IEC 17025:2005. Calibration conforms to ANSI/NCSI Z540.1-1994 and ANSI/NCSI Z540.3-2006.

Date: 03-May-17 Certificate #: 1705031403E SO#: 156784

Temp: 22 Degrees C Humidity: 39 % Procedure: TP-0113:08NOV2011

Rendered To: GAP Enviromicrobial Services

InstrumentModel-S/N: ILT1700 #IL17005296

Calibration/Repair Remarks: None

Parts (If Needed): None

As Found Tolerance		As Found Readings	As Found Permissible Error	Applied Current	Adjusted Readings	Permissible Adjustment Error	As Left Tolerance	
In	Out						In	Out
☑	☐	10.00E-4	+/- 0.5%	1.000E-3	1.000E-3	+/- 0.2%	☑	☐
☑	☐	1.001E-4	+/-0.5%	1.000E-4	1.000E-4	+/- 0.2%	☑	☐
☑	☐	9.99E-6	+/-0.7%	1.000E-5	9.99E-6	+/- 0.2%	☑	☐
☑	☐	9.98E-7	+/-1.0%	1.000E-6	9.99E-7	+/- 0.2%	☑	☐
☑	☐	9.99E-8	+/-1.0%	1.000E-7	1.000E-7	+/- 0.5%	☑	☐
☑	☐	9.99E-9	+/-1.0%	1.000E-8	1.000E-8	+/- 0.5%	☑	☐
☑	☐	1.000E-9	+/-1.0%	1.000E-9	1.000E-9	+/- 0.5%	☑	☐
☑	☐	9.97E-11	+/-1.5%	1.000E-10	1.000E-10	+/- 1.0%	☑	☐

Tolerance after repair and/or calibration: ☑ In ☐ Out

Measurement Uncertainty: 1mA=±0.065%, 100uA=±0.062%, 10uA=±0.062%, 1uA=±0.065%, 100nA=±0.073%, 10nA=±0.079%, 1nA=±0.084%, 100pA=0.26%

The above Instrument was compared to the Keithley Current Calibrator/Source Model 263 S/N 0730631 calibrated on 3/30/2017. Calibration Due: 3/30/2018

Calibrated By: ____________

Electrical Calibration Tech. Chris Kucy

This certificate applies only to the item identified and shall not be reproduced other than in full, without the specific written approval by International Light Technologies, Inc.

ilac-MRA

PJLA
Calibration
Accreditation# 66765

International Light Technologies, Inc.
10 Technology Drive, Peabody, MA 01960 USA
978-818-6180 / 978-818-6181 *fax*
intl-lighttech.com

C398

International**Light**
TECHNOLOGIES

CALIBRATION CERTIFICATE

OPTICAL CALIBRATION CERTIFICATE

International Light Technologies certifies that the calibration results published in this certificate were obtained using equipment capable of producing results that are traceable to NIST and through NIST to the International System of Units (SI). ILT is Accredited to ISO/IEC 17025:2005. Calibration conforms to ANSI/NCSI Z540.1-1994 and ANSI/NCSI Z540.3-2006.

Rendered-to: GAP ENVIROMICROBIAL SERVICE

Detector: SED240 #SED2406497
Input Optic: W #12831
Filter: N/A #
Misc.: QNDS2 #29167
Calibrated With: ILT1700 #IL17005296
+5V Bias On

(PIR) PEAK IRRADIANCE RESPONSE SENSITIVITY FACTOR AS CALIBRATED ON: 03-May-2017

1.617E-5 (A)(cm2)(W-1) assuming monochromatic irradiance at 254nm
1.617E-08 (A)(cm2)(mW-1) assuming monochromatic irradiance at 254nm

Unit will read directly in watts per square centimeter or milliWatts per square centimeter when used with the sensitivity factor above. Calibration Due: 5/3/2018

REFERENCE PLANE Groove ONE formed by filter or diffuser elements and next element, counted from front surface of assembly.

PRIMARY STANDARD: U.S. National Institute of Standards and Technology Detector Response
I219 - December 3, 2015 - NIST Test No. 685/287304-15/2 : D204 - December 2, 2015 - NIST Test No. 685/287304-15/1

INTERNATIONAL LIGHT TECHNOLOGIES PRIMARY TRANSFER STANDARDS:

SED240 #1029 N/A N/A

ILT Transfer Uncertainty to Customer = +/- 6.5% plus NIST Uncertainty of: +/- 1%

LIGHT SOURCE: R-52G Mineralight UV Lamp
LAMP OUTPUT: 4.30E-4 W/cm2
INSTRUMENTATION: SED240 #1029/NS254 #25517/QNDS
PROCEDURE: OP-0098
TEMPERATURE: 21.7 degrees C
HUMIDITY: 37%
CALIBRATED BY: M. Gordon
Calibration Technician: Matthew Gordon

THIS CERTIFICATE APPLIES ONLY TO THE ITEMS IDENTIFIED AND SHALL NOT BE REPRODUCED EXCEPT IN FULL, WITHOUT THE SPECIFIC WRITTEN APPROVAL BY INTERNATIONAL LIGHT TECHNOLOGIES, INC.

Calibration Date: 5/3/2017
Certificate No: 705038004
Sales Order #: 156784

ilac-MRA

PJLA
Calibration
Accreditation#
66765

International Light Technologies, Inc.
10 Technology Drive, Peabody, MA 01960 USA
978-818-6180 / 978-818-6181 *fax*
intl-lighttech.com

Form F-074 (Rev I)

GIGAHERTZ OPTIK GMBH

Werksprüfschein
Calibration Report

Prüfzeichen
Mark

E-1742679

Gegenstand *Object*	**Optometer Anzeigegerät / *Instrument***
Hersteller *Manufacturer*	**Gigahertz-Optik GmbH**
Typ *Type*	**X9-11**
Fabrikate/Serien-Nr. *Serial number*	**12568M**
Auftraggeber *Customer*	**GAP EnviroMicrobial Services Ltd.**
Auftragsnummer *Order No.*	**2017-42679 / (PO 4298)**
Anzahl der Seiten des Prüfscheines *Number of pages of the certificate*	**2**

Dieser Kalibrierschein dokumentiert die Rückführung auf nationale Normale zur Darstellung der Einheiten in Übereinstimmung mit dem Internationalen Einheitensystem (SI). Methoden und Verfahren der Kalibrierung entsprechen den Anforderungen der ISO17025. Die internen Transfernormale werden regelmäßig gegen Normale kalibriert, welche einen DKD/DAkkS-Kalibrierschein haben oder rückführbar auf ein Normal mit DKD/DAkkS-Kalibrierschein kalibriert sind oder gegen Normale eines nationalen Metrologieinstituts kalibriert sind.

Für die Einhaltung einer angemessenen Frist zur Wiederholung der Kalibrierung ist der Benutzer verantwortlich.

This calibration certificate documents the traceability to national standards, which realise the units of measurement according to the International System of Units (SI). Methods and procedures of calibration meet the requirements of ISO17025. The intern used transfer standards were regular calibrated against standards, which have DKD/DAkkS certificates or are traceable to a standard with DKD/DAkkS or National Metrology Institute certificate.

The user is obliged to have the object recalibrated at appropriate intervals.

Dieser Prüfschein darf nur vollständig und unverändert weiterverbreitet werden. Auszüge oder Änderungen bedürfen der Genehmigung des Kalibrierlaboratoriums der Firma Gigahertz-Optik Gesellschaft für technische Optik mbH.
Prüfscheine ohne Unterschrift und Stempel haben keine Gültigkeit.

This Certificate may not be reproduced other than in full except with the permission of the Gigahertz-Optik GmbH.
Certificates without signature and seal are not valid.

Stempel *Seal*	Datum *Date*	Mitarbeiter im Kalibrierlabor *Assistant of the calibration laboratory*
	12. Dezember 2017	Fleischmann Erich Fleischmann

1. Beschreibung des Gegenstandes:

Es handelt sich um ein Anzeigegerät, Typ siehe oben zur Messung von Photoströmen. Der gemessene Photostrom kann bei Verwendung eines Kalibrierdatensteckers mit rechnerisch einem Kalibrierfaktor behaftet zur Anzeige gebracht werden. Das Gerät wurde auf Strom kalibriert.

1. Description of the Object:

The above listed instrument is able to measure photo current. The instrument was current calibrated.

2. Messverfahren:

Für jeden Messbereich wurde durch Einspeisung eines bekannten Stromes die Anzeige abgelesen.
Als Quelle diente eine Konstantstromkalibrierquelle Typ KEITHLEY 263, Se.Nr. 0704959, Kalibrierscheinnummer 086867, Rückführbarkeit D-K-15019-01-00, Kalibrierdatum 2014-07, gültig bis 2018-07. Diese ist rückführbar auf die nationalen Normale bei einem DAkkS Labor kalibriert. Das Ergebnis ist nachfolgend protokolliert.

2. Measurement:

For each range the input current was read out. The reference was a calibration standard type KEITHLEY 263, Se.Nr. 0704959, Cert no 086867, Traceability D-K-15019-01-00, Cal date 2014-07, due to 2018-07. This unit is traceable to the national standards of a DAkkS Laboratory. The results are listed above.

3. Messbedingungen:

Die Kalibrierung wurde nach einer Anwärmzeit von 5 Minuten durchgeführt. Die Messbereichsumschaltung war auf Automatik eingeschaltet. Die mögliche Offsetfunktion des Gerätes war abgeschaltet. Die Messungen erfolgten bei einer Umgebungstemperatur von (24 ± 2)° C.

3. Conditions during the calibration:

The calibration was done after 5 minutes warm up. The range was set to auto function. The Offset function was set to reset. The ambient conditions are (24 ± 2)° C.

4. Messergebnisse:

4. Result of the measurement:

Calibration Standard		Calibration Object				
Reference Current	Actual Measured Current	Deviation As Found	Deviation As Calibrated	Tolerance		
AMPERE (A)		PERCENT		PERCENT (%)	In	Out
1,00E-04	1,0011E-04	0,111%	nan*	0,5	x	
1,00E-05	1,0007E-05	0,070%	nan*	0,5	x	
1,00E-06	9,9966E-07	-0,034%	nan*	0,5	x	
1,00E-07	1,0012E-07	0,118%	nan*	0,5	x	
1,00E-08	1,0003E-08	0,034%	nan*	0,5	x	
1,00E-09	1,0003E-09	0,028%	nan*	0,5	x	
1,00E-10	9,9748E-11	-0,252%	nan*	0,5	x	

nan* = no adjustment necessary

☒ Die ermittelten Messwerte liegen innerhalb der Spezifikation.
☐ Die ermittelten Messwerte liegen außerhalb der Spezifikationen (!).

Relative Messunsicherheit beträgt *Relative uncertainty is*	± 0,3%

5. Bemerkungen:

Die oben angegebene Prüfnummer E-1742679 ist am Kalibriergegenstand angebracht. Eine Abhängigkeit von anderen als den angegebenen Betriebsbedingungen oder Einflußgrößen ist nicht untersucht worden. Eine Rekalibrierung nach 2 Jahren ist empfohlen.

5. Remarks:

The calibration mark E-1742679 was marked on the calibration object. A dependence of other as the given conditions is not examined. A recalibration after 2 years is recommended.

Kalibrierlaboratorium für optische Strahlungsmessgrößen
Calibration laboratory for optical radiometry

GIGAHERTZ-OPTIK GMBH

Werkskalibrierschein
Calibration Certificate

Kalibrierzeichen *Calibration mark*	1742679 WERK 2017-12

Gegenstand *Object*	**Es handelt sich um einen UV-C Messkopf** *Calibration object is a UV-C detector*	
Hersteller *Manufacturer*	**Gigahertz-Optik GmbH**	
Typ *Type*	**UV-3718-4**	**X9-11**
Fabrikate/Serien-Nr. *Serial number*	**22603**	**12568M**
Auftraggeber *Customer*	**GAP EnviroMicrobial Services Ltd.**	
Auftragsnummer *Order No.*	**2017-42679 / (4298)**	
Datum der Kalibrierung *Date of calibration*		**11. Dezember 2017**
Anzahl der Seiten des Kalibrierscheines *Number of pages of the certificate*	**2**	

Dieser Kalibrierschein dokumentiert die Rückführung auf nationale Normale zur Darstellung der Einheiten in Übereinstimmung mit dem Internationalen Einheitensystem (SI).

Methoden und Verfahren der Kalibrierung entsprechen den Anforderungen der ISO17025. Die internen Transfernormale werden regelmäßig gegen Normale kalibriert, welche einen DKD/DAkkS-Kalibrierschein haben oder rückführbar auf ein Normal mit DKD/DAkkS-Kalibrierschein kalibriert sind oder gegen Normale eines nationalen Metrologieinstituts kalibriert sind.

Für die Einhaltung einer angemessenen Frist zur Wiederholung der Kalibrierung ist der Benutzer verantwortlich.

This calibration certificate documents the traceability to national standards, which realise the units of measurement according to the International System of Units (SI).

Methods and procedures of calibration meet the requirements of ISO17025. The intern used transfer standards were regular calibrated against standards, which have DKD/DAkkS certificates or are traceable to a standard with DKD/DAkkS or National Metrology Institute certificate.

The user is obliged to have the object recalibrated at appropriate intervals.

Dieser Kalibrierschein darf nur vollständig und unverändert weiterverbreitet werden. Auszüge oder Änderungen bedürfen der Genehmigung des Kalibrierlaboratoriums der Firma Gigahertz-Optik Gesellschaft für technische Optik mbH.
Kalibrierscheine ohne Unterschrift und Stempel haben keine Gültigkeit.
This calibration certificate may not be reproduced other than in full and with the permission of the Gigahertz-Optik GmbH. Calibration certificates without signature and seal are not valid.

Stempel *Seal*	Datum *Date* 12. Dezember 2017	Stellv. Leiter des Kalibrierlaboratoriums *Deputy Head of the calibration laboratory* Dipl.-Ing. (FH) Stephan Fenk	Mitarbeiter im Kalibrierlabor *Person of Charge* Korbinian Seiffert

1. Beschreibung des Kalibriergegenstandes:
Der UV-C Messkopf besteht aus einem Photoelement, einer berechneten Filterkombination und einem für den UV-Bereich optimierten Cos-Diffusor.

1. Description of the calibration object:
The UV-C detector consists of a photoelement with an optical filter and cosine diffuser designed for optimal response in the specified spectral range.

2. Messverfahren:
Die integrale Bestrahlungsstärke E(λ) wurde durch Vergleich mit einem Messkopf UV-3718-4, SN 4378 (GO-586-WERK-2017-11, due to 11.2018) ermittelt.

2. Measurement:
Irradiance E(λ) was measured using a laboratory standard detector type UV-3718-4, SN 4378 (GO-586-WERK-2017-11, due to 11.2018).

3. Messbedingungen:
Der UV-C Messkopf, der vollkommen überstrahlt wurde, befand sich senkrecht und zentrisch vor einer angenäherten Punktlichtquelle, erzeugt mit einer UV Lampe, Typ Osram HNS G 5 W ofr. Die Bezugsebene ist die Diffusereintrittsfläche. Der Ausgangsstrom wurde mittels Optometer X9-11, SN 12568M bei einer Umgebungstemperatur von (24 ± 2) °C gemessen.

3. Conditions during the calibration:
The UV-C detector head was set in a divergent beam of an approximate point source created from the UV lamp type Osram HNS G 5 W ofr. The beam axis has been almost perpendicular and centric. The detector head was fully overlighted. The reference surface corresponds to the surface of the cosine diffuser. The output current of the detector head was measured using an Optometer X9-11, SN 12568M . The temperature of the room was (24 ± 2) °C.

4. Messergebnisse:
4. Result of the measurement:

Wellenlänge in nm Wavelength	Integrale Bestrahlungsstärke in A / (W/cm²) Integral irradiance		Relative Messunsicherheit in % Relative uncertainty
	Alter Wert *Old value*	Neuer Wert *New value*	
254	-2,164E-05	-2,146E-05	± 6,5

5. Bemerkungen:
Die oben angegebene Kalibrier-Nr. 1742679-WERK-2017-12 ist am Messkopf UV-3718-4, Seriennummer 22603 angebracht. Der Kalibrierfaktor ist im Optometer X9-11, SN 12568M eingespeichert.
Eine Abhängigkeit der integralen Bestrahlungsstärke von anderen als den angegebenen Betriebsbedingungen oder Einflußgrößen ist nicht untersucht worden. Es ist mit einer wellenlängenabhängigen Alterung zu rechnen.
Eine Rekalibrierung innerhalb eines Jahres ist zu empfehlen.

5. Remarks:
The calibration report number 1742679-WERK-2017-12 is marked on the detector, type UV-3718-4, serial number 22603. The calibration factor is stored into the Optometer X9-11, SN 12568M . Accuracy of results of irradiance measurements made under different conditions than those specified in this certificate has not been examined. Detector components can change with time and cumulative exposure to optical radiation effecting absolute and spectral sensitivity. Therefore, recalibration on a yearly basis is recommended.

Appendix E

UV SPECTROPHOTOMETER PERFORMANCE CERTIFICATES AND CALIBRATION CHECKS

Certified Reference Materials for UV, Visible, NIR and IR Molecular Spectroscopy

RM-HL

Set Serial No: 15509

Customer Details:
Starna Cells Inc
5950 Traffic Way
Atascadero
C.A. 93422
U.S.A.

The customer information stated on this page, number 1 of 3 applies to all certificates.

UKAS accreditation applies to all Wavelength, Transmission/Absorbance, Stray Light references, and those used for Resolution measurements.

BSI REGISTERED
NATIONAL ACCREDITATION OF CERTIFICATION BODIES
Registered No. FM 30093

UKAS CALIBRATION
0659

UKAS REFERENCE MATERIALS
4001

Certificate of Calibration and Traceability

Calibration Lab.
Starna Scientific Ltd
52/54 Fowler Rd
HAINAULT
Essex IG6 3UT
England
Tel. +44 (0) 20 8501 5550

Email: sales@starna.com

Holmium oxide in perchloric acid sealed in a quartz cell for use as a wavelength accuracy reference in the UV and visible spectrum

Certificate Number: **59969**
Certificate Date: **20 October 2016**
Expiration Date: **20 October 2018**
Analysis Number: **HL421101**
Set Serial Number: **15509**
Cell Serial Number: **33344**

0659

Description of Reference Material:

This reference material consists of an aqueous solution of 4% holmium oxide in 10% perchloric acid which is permanently sealed by heat fusion in a high quality far UV quartz cell. The reference material is designed for the verification and calibration of the wavelength scales of visible and ultraviolet spectrophotometers having nominal spectral bandwidths of 5 nm or less. All procedures are implemented in accordance with ISO/IEC 17025 and ISO Guide 34. Additional information can be found on the Starna web site at www.starna.com

Certified Values of Reference Material:

The holmium oxide filled cell is measured in the absorbance mode against an air blank, over the wavelength range of 660 to 230nm. For each spectral bandwidth, a baseline correction is performed with an empty cell holder.
The 14 maximum absorption peaks are identified and certified to be within the expected wavelength range tolerance for each spectral bandwidth (SBW) as specified by the NIST reference control.

The combined analytical and instrument uncertainties at a coverage probability of 95 % is 0.11 nm.

The reported expanded uncertainty is based on a standard uncertainty multiplied by a coverage factor k=2. providing a coverage probability of approximately 95%. The uncertainty evaluation has been carried out in accordance with UKAS requirements

SBW	**Wavelengths in nanometers of peak maxima as referenced to air, +/- 0.11nm**													
0.10	640.41	536.42	485.20	467.78	452.02	416.02	385.36	361.27	345.46	333.48	287.03	278.15	249.78	240.97
0.25	640.41	536.43	485.21	467.79	451.98	416.04	385.39	361.27	345.45	333.47	287.04	278.15	249.79	240.98
0.50	640.43	536.45	485.21	467.80	451.91	416.07	385.45	361.27	345.43	333.47	287.08	278.15	249.81	241.02
1.00	640.50	536.56	485.23	467.82	451.45	416.25	385.61	361.25	345.38	333.48	287.22	278.13	249.89	241.12
1.50	640.62	536.71	485.26	467.86	451.33	416.42	385.70	361.18	345.38	333.49	287.40	278.11	249.98	241.13
2.00	640.79	536.86	485.25	467.90	451.32	416.57	385.80	361.12	345.42	333.47	287.52	278.10	250.03	241.12
3.00	641.15	537.21	485.21	468.11	451.36	416.89	386.00	361.11	345.53	333.47	287.57	278.05	250.07	241.04
4.00	641.42	537.58	485.26	473.53	451.41	417.07	386.31	361.14	345.57	333.47	287.64	277.98	250.11	241.00
5.00	641.66	537.91	485.25	473.35	451.40	417.32	386.44	361.13	345.58	333.47	287.78	277.93	250.15	240.97

Certifying Instrument Qualification:

All calibration is performed on one of a series of high performance reference spectrophotometers. The instruments are tested and qualified to the manufacturer's published specification over the analytical range used for the reference material certification.
The following primary references and fundamental procedures are used in the qualification of the reference spectrophotometers:

Absorbance: NIST SRM 2031, 1930 & 930e, Double aperture method

Wavelength: NIST SRM 2034, Emission lines of Hg & deuterium

Stray Light: NIST SRM 2032, KCl, KI & lithium carbonate

Resolution: Benzene vapor, half width of D2 656.1 nm line

Calibration Method:

The conditions of analysis used to generate the certified values on this certificate are as listed in the chart below:

Cell Pathlength:10 +/- 0.01mm

Cell Material: Spectrosil Quartz

Reference: Air

Scale: Absorbance

Range: 660 to 230 nm

Band width: Multiple

Temperature: 23.5° C +/- 1.0 °C

Instructions for Use:

Carefully insert the holmium filled cell into the cell holder of your instrument touching only the frosted sides or by holding the top of the cell. The cell is fragile and should always be handled with care. Leave the reference cell holder empty as all measurements are to be made against air. Measurements should be made within the temperature range of 20° to 30° C. In the absorbance mode scan the cell over the required range. Find the absorbance maxima and compare them to the certified wavelengths on this certificate as indicated for the spectral bandwidth (SBW) used by your instrument. If you find any significant differences, it is recommended that a service technician inspect your instrument to determine the source of the discrepancy.

Instrument Dependencies:

The instrument to be tested should be set at a SBW not exceeding 5 nm. Consult the instrument owners handbook for this information.

Duration of Certificate:

This certificate is valid for a maximum period of two years from the date of issue or sooner if specified by the user's own protocols. Although the references are covered by a lifetime guarantee this is subject to certain conditions, see guidance notes.

Re-certification Procedure:

All reference materials are certified and supplied in a useable condition. There is no warranty for fitness beyond receipt by the customer. When references need to be re-certified or inspected for any reason, customers should return them to the Starna ISO/IEC 17025 & ISO Guide 34 accredited calibration laboratory, where all original data is collated.

On receipt by Starna Scientific the references are measured “As received”, before cleaning under the re-certification procedure. “As received” data is available on request.

Storage and Care:

References should always be stored in the box provided and handled with extreme care. Quartz cells are fragile and should be inserted and removed from the instrument by holding the cell cap, taking care not to twist or apply leverage against the cell holder, as this may crack the cells. Damage in the form of scratches may alter the certified values significantly such that they need re-certifying and may, as with cracks, require complete replacement. For cleaning see guidance notes.

Calibration performed by:

A. Wakelin CSci CChem MRSC

Approved Signatory:

J. P. Hammond

J. P. Hammond CSci CChem FRSC

Certified Reference Materials for UV, Visible, NIR and IR Molecular Spectroscopy

RM-02

Set Serial No: 15712

Customer Details:
Starna Cells Inc
5950 Traffic Way
Atascadero
C.A. 93422
U.S.A.

The customer information stated on this page, number 1 of 3 applies to all certificates.

UKAS accreditation applies to all Wavelength, Transmission/Absorbance, Stray Light references, and those used for Resolution measurements.

BSI REGISTERED Registered No. FM 30093

UKAS CALIBRATION 0659

UKAS REFERENCE MATERIALS 4001

Certificate of Calibration and Traceability

Calibration Lab.
Starna Scientific Ltd
52/54 Fowler Rd
HAINAULT
Essex IG6 3UT
England
Tel. +44 (0) 20 8501 5550

Email: sales@starna.com

Potassium Dichromate in Perchloric acid sealed in Far UV quartz cells for use as a linearity and photometric accuracy reference in the UV.

Certificate Number:	**59960**
Certificate Date:	**20 October 2016**
Expiration Date:	**20 October 2018**
Analysis Number:	**21018**
Set Serial Number:	**15712**
Blank Serial Number:	**33883**

0659

Description of Reference Material:

NIST SRM 935a Potassium Dichromate is used to prepare the reference solutions.These are sealed by heat fusion in high quality Far UV quartz cells. Certification is performed in accordance with the instructions that are issued with NIST SRM 935a.All procedures are implemented in accordance with ISO/IEC 17025 and ISO Guide 34. Additional information can be found on the Starna web site at www.starna.com

Certified Values of Reference Material:

The Potassium Dichromate filled cells are measured against a Perchloric acid blank. The net absorbance values are listed in the table below. Under the analytical procedures used, as outlined by NIST in the Appendix NIST Special Publication 260-54.
The combined analytical and instrument uncertainties at a coverage probability of 95 % is 0.0037 A at 20 mg/l, 0.0045 A at 40 mg/l, 0.0049 A at 60 mg/l, 0.0058 A at 80 mg/l, 0.0068 A at 100 mg/l, 0.0084 A at 120 mg/l, 0.0091 A at 140 mg/l, 0.0098 A at 160 mg/l, 0.011 A at 180 mg/l, 0.012 A at 200 mg/l, 0.013 A at 220 mg/l, 0.013 A at 240 mg/l and 0.0043 at 600 mg/l.

The reported expanded uncertainty is based on a standard uncertainty multiplied by a coverage factor k=2. providing a coverage probability of approximately 95%. The uncertainty evaluation has been carried out in accordance with UKAS requirements.
The weight shown below is the mean calculated weight of potassium dichromate in this solution using the specific absorbance values quoted on the NIST SRM 935a certificate, together with the certified absorbance values.

Nominal Concentration:		**Wavelength:**	**Absorbance:**	**Calculated Weight:**
Potassium Dichromate 20 mg/l		350 nm	0.2103	
		313 nm	0.0971	mg/l ± 0.5 mg/l (k=2)
Cell Serial No:	33429	257 nm	0.2851	
		235 nm	0.2503	20.14

Set Serial Number: **15712**
Starna Certificate No: **59960**
Certificate Date: **20 October 2016**
Analysis Date: **19 October 2016**

UKAS Accredited Calibration Laboratory No. 0659

Certifying Instrument Qualification:

All calibration is performed on one of a series of high performance reference spectrophotometers. The instruments are tested and qualified to the manufacturer's published specification over the analytical range used for the reference material certification.
The following primary references and fundamental procedures are used in the qualification of the reference spectrophotometers:

Absorbance:	NIST SRM 2031, 1930 & 930e, Double aperture method
Wavelength:	NIST SRM 2034, Emission lines of Hg & deuterium
Stray Light:	NIST SRM 2032, KCl, KI & lithium carbonate
Resolution:	Benzene vapor, half width of D2 656.1 nm line

Calibration Method:

The conditions of analysis used to generate the certified values on this certificate are as listed in the chart below:

Cell Pathlength:	10 mm	+/- 0.01mm
Cell Material:	Spectrosil Quartz	
Blank Solution:	0.001M Perchloric acid	
Scale:	Absorbance	
Range:	350 to 235 nm	
Band width:	1.0 nm +/- 0.2nm	
Temperature:	23.5 +/- 1.0 °C	

Instructions for Use:

Determine the absorbance of each cell against the supplied blank at each of the four listed wavelengths. Repeat several times.To test instrument linearity, plot the results on a graph of absorbance vs concentration. The graph should produce straight lines if your instrument is linear in the region. To assess photometric accuracy, compare the net absorbance reading at each concentration and wavelength to the published values on this certificate.
The absolute difference between the mean measured value and the certified value will not exceed the sum of the certified uncertainty and the specified accuracy of the instrument, if the instrument is performing correctly

Instrument Dependencies:

The instrument must be designed to be used in the ultraviolet region down to 230nm and have a spectral bandpass of 1.6nm or less. Consult your instrument owners manual for this information.

Duration of Certificate:

This certificate is valid for a maximum period of two years from the date of issue or sooner if specified by the user's own protocols. Although the references are covered by a lifetime guarantee this is subject to certain conditions, see guidance notes.

Re-certification Procedure:

All reference materials are certified and supplied in a useable condition. There is no warranty for fitness beyond receipt by the customer. When references need to be re-certified or inspected for any reason, customers should return them to the Starna ISO/IEC 17025 & ISO Guide 34 accredited calibration laboratory, where all original data is collated.

On receipt by Starna Scientific the references are measured "As received", before cleaning under the re-certification procedure. "As received" data is available on request.

Storage and Care:

References should always be stored in the box provided and handled with extreme care. Quartz cells are fragile and should be inserted and removed from the instrument by holding the cell cap, taking care not to twist or apply leverage against the cell holder, as this may crack the cells. Damage in the form of scratches may alter the certified values significantly such that they need re-certifying and may, as with cracks, require complete replacement. For cleaning see guidance notes.

Calibration performed by:

A. Wakelin CSci CChem MRSC

Approved Signatory:

J. P. Hammond

J. P. Hammond CSci CChem FRSC

Certified Reference Materials for UV, Visible, NIR and IR Molecular Spectroscopy

RM-RE

Set Serial No: 15713

Customer Details:
Starna Cells Inc
5950 Traffic Way
Atascadero
C.A. 93422
U.S.A.

The customer information stated on this page, number 1 of 3 applies to all certificates.

UKAS accreditation applies to all Wavelength, Transmission/Absorbance, Stray Light references, and those used for Resolution measurements.

BSI REGISTERED
NATIONAL ACCREDITATION OF CERTIFICATION BODIES
Registered No. FM 30093

UKAS CALIBRATION
0659

UKAS REFERENCE MATERIALS
4001

Certificate of Calibration and Traceability

Calibration Lab.
Starna Scientific Ltd
52/54 Fowler Rd
HAINAULT
Essex IG6 3UT
England
Tel. +44 (0) 20 8501 5550

Email: sales@starna.com

Rare earth in suphuric acid sealed in a quartz cell for use as a wavelength accuracy reference in the UV and visible spectrum

Certificate Number: **59970**
Certificate Date: **20 October 2016**
Expiration Date: **20 October 2018**
Analysis Number: **RE24060801**
Set Serial Number: **15713**
Cell Serial Number: **28053**

0659

Description of Reference Material:

This reference material consists of an aqueous solution of a rare earth in sulphuric acid which is permanently sealed by heat fusion in a high quality far UV quartz cell. The reference material is designed for the verification and calibration of the wavelength scales of ultraviolet spectrophotometers having nominal spectral bandwidths of 5 nm or less. All procedures are implemented in accordance with ISO/IEC 17025 and ISO Guide 34. Additional information can be found on the Starna web site at www.starna.com

Certified Values of Reference Material:

The reference cell is measured in the absorbance mode against an air blank, over the wavelength range of 300 to 200 nm. For each spectral bandwidth, a baseline correction is performed with an empty cell holder.
The 5 maximum absorption peaks are identified and certified to be within the expected wavelength range tolerance for each spectral bandwidth (SBW) in accordance with procedures implemented under ISO/IEC 17025.

The combined analytical and instrument uncertainties at a coverage probability of 95 % is 0.20 nm.

The reported expanded uncertainty is based on a standard uncertainty multiplied by a coverage factor k=2. providing a coverage probability of approximately 95%. The uncertainty evaluation has been carried out in accordance with UKAS requirements

SBW	**Wavelengths in nanometers of peak maxima as referenced to air, +/- 0.20 nm**				
0.10	253.57	240.32	222.67	211.43	200.96
0.25	253.57	240.36	222.63	211.47	201.21
0.50	253.58	240.34	222.62	211.44	201.10
1.00	253.67	240.42	222.60	211.44	201.10
1.50	253.65	240.46	222.61	211.46	201.02
2.00	253.59	240.51	222.59	211.44	201.02
3.00	253.57	240.71	222.52	211.36	200.91
4.00	253.42	240.90	222.16	211.00	200.68
5.00	253.30	241.23	222.46	211.90	201.30

Starna Cell Serial Number: **28053**
Certificate Number: **59970**
Certificate Date: **20 October 2016**
Verification Date: **20 October 2016**

UKAS Accredited Calibration Laboratory No. 0659

Certifying Instrument Qualification:

All calibration is performed on one of a series of high performance reference spectrophotometers. The instruments are tested and qualified to the manufacturer's published specification over the analytical range used for the reference material certification.
The following primary references and fundamental procedures are used in the qualification of the reference spectrophotometers:

Absorbance:	NIST SRM 2031, 1930 & 930e, Double aperture method
Wavelength:	NIST SRM 2034, Emission lines of Hg & deuterium
Stray Light:	NIST SRM 2032, KCl, KI & lithium carbonate
Resolution:	Benzene vapor, half width of D2 656.1 nm line

Calibration Method:

The conditions of analysis used to generate the certified values on this certificate are as listed in the chart below:

Cell Pathlength:	10 +/- 0.01mm
Cell Material:	Spectrosil Quartz
Reference:	Air
Scale:	Absorbance
Range:	300 to 200 nm
Band width:	Multiple
Temperature:	23.5° C +/- 1.0 °C

Instructions for Use:

Carefully insert the reference cell into the cell holder of your instrument touching only the frosted sides or by holding the top of the cell. The cell is fragile and should always be handled with care. Leave the reference cell holder empty as all measurements are to be made against air. Measurements should be made within the temperature range of 20° to 30° C. In the absorbance mode scan the cell over the required range. Find the absorbance maxima and compare them to the certified wavelengths on this certificate as indicated for the spectral bandwidth (SBW) used by your instrument. If you find any significant differences, it is recommended that a service technician inspect your instrument to determine the source of the discrepancy.

Instrument Dependencies:

The instrument to be tested should have a SBW not exceeding 5 nm. Consult the instrument owners handbook for this information.

Duration of Certificate:

This certificate is valid for a maximum period of two years from the date of issue or sooner if specified by the user's own protocols. Although the references are covered by a lifetime guarantee this is subject to certain conditions, see guidance notes.

Re-certification Procedure:

All reference materials are certified and supplied in a useable condition. There is no warranty for fitness beyond receipt by the customer. When references need to be re-certified or inspected for any reason, customers should return them to the Starna ISO/IEC 17025 & ISO Guide 34 accredited calibration laboratory, where all original data is collated.

On receipt by Starna Scientific the references are measured “As received”, before cleaning under the re-certification procedure. “As received” data is available on request.

Storage and Care:

References should always be stored in the box provided and handled with extreme care. Quartz cells are fragile and should be inserted and removed from the instrument by holding the cell cap, taking care not to twist or apply leverage against the cell holder, as this may crack the cells. Damage in the form of scratches may alter the certified values significantly such that they need re-certifying and may, as with cracks, require complete replacement. For cleaning see guidance notes.

Calibration performed by:

Alan Wakelin

A. Wakelin CSci CChem MRSC

Approved Signatory:

J. P. Hammond

J. P. Hammond CSci CChem FRSC

UV Spectrophotometer Calibration Check

UV spectrophotometer UV absorbance and wavelength accuracy was checked, respectively, using potassium dichromate, holmium oxide, and rare earth standards (Starna Cells, Inc, Atascadero, CA) on each day of testing. A zero absorbance solution (laboratory-grade deionized water) was used to check the absorbance of the distilled water used to zero the spectrophotometer between samples, as is recommended in Section 5.5.2 (bullet 3) of the UVDGM. All results were within the 0.002 cm^{-1} limit set by the UVDGM and are presented in Table 1.

The potassium dichromate standard consisted of two cuvettes. One cuvette contained a 20 mg/L solution of potassium dichromate with known UV absorption coefficients at 350 nm, 313 nm, 257 nm and 235 nm, traceable to National Institute of Standards and Technology (NIST) primary standards with an uncertainty of ± 0.004. The other cuvette contained a zero absorbance solution (blank). The blank solution was used to zero the spectrophotometer prior to measuring the absorption coefficient of the standard.

Table 2 compares the UV absorbance of the potassium dichromate standard measured using the DR 5000 to the expected UV absorbance stated by Starna. The UV absorbance measured at 350, 313, 257 and 235 nm differed from the expected value on average by 0.74, 2.01, 0.84, and 1.13 percent, respectively. The percent difference is calculated as the measured value minus the expected value all divided by the expected value times 100. These values are then averaged to give the average percent difference for the given wavelengths. The UV absorbance measured by the DR5000 matched the expected value within the uncertainty of the standard and within the 10 percent UVDGM criterion.

The holmium oxide standard consisted of a cuvette containing a solution of holmium oxide with absorbance peaks that occur at known wavelengths traceable to National Institute of Standards and Technology (NIST) primary standards, with an uncertainty of ± 0.11 nm (k=2). Table 3 presents the known wavelengths at which the peaks occur and the wavelengths at which the peaks occurred in each of the scans conducted during testing.

The rare earth standard consisted of a cuvette containing a solution of rare earth with absorbance peaks that occur at known wavelengths traceable to National Institute of Standards and Technology (NIST) primary standards, with an uncertainty of ± 0.11 nm (k=2). Table 4 presents the known wavelengths at which the peaks occur and the wavelengths at which the peaks occurred in the scans conducted during testing. The maximum error in UV absorbance related to the wavelength error of the spectrophotometer at 253.7 nm is 4.64 percent.

The following method was used for calculating the maximum error in UV absorbance related to the wavelength error of the spectrophotometer for the rare earth standards at 253.7 nm.

1. Calculate the difference between the measured and expected wavelengths for the Rare Earth Calibration Check Results at 253.7 nm given in Table 4

2. With each UVT scan, calculate the slope of the relation between the UV absorbance and wavelength at 254 nm. Divide that value by the UV absorbance at 254 nm

3. Multiply the largest absolute difference in the measured and expected wavelength by the largest absolute value from Step 2. Express that value as a percentage by multiplying by 100.

4. Report the results from Step 3 as the maximum error in UV absorbance related to the wavelength error of the spectrophotometer.

Because the Real Tech analyzer uses a low-pressure mercury lamp that emits UV light at 253.7 nm, there is no need to verify the wavelength accuracy of the device. The UVT measurements made by the Real Tech analyzer were used for this validation to define the UV dose monitoring algorithms. Based on the analysis of the error for each standard presented in this section, the accuracy of those measurements is within the accuracy of the Hach DR5000, which is estimated at $(0.84^2+4.64^2)^{1/2}$ = 3.92 percent, within the UVDGM criteria of 10 percent for the accuracy of UVT measurements during UV validation.

A secondary standard of potassium dichromate was prepared on site from reagent grade potassium dichromate powder to an approximate absorbance 0.27 AU as determined by the Varian spectrophotometer set at 253.7 nm. This standard was measured with the RealTech UVT analyzer and compared to the DR5000 spectrophotometer to ensure that the absorbance measurements differed at most by 0.0094 AU or 3.39 percent. Table 5 shows these results.

Table 1 Distilled Water Absorbance Check to Zero Absorbance Solution (UVA, cm^{-1})

Date	DR5000	RealTech Analyzer
1/8/2019	0.00020	0.0000
1/9/2019	0.00060	0.0000
1/16/2019	-0.0010	0.0000
3/12/2019	0.0000	0.0009
3/13/2019	0.0013	0.0007
3/14/2019	-0.0030	0.0002
3/19/2019	-0.0010	0.0002
4/18/2019	0.0014	0.0017

Table 2 Potassium Dichromate Calibration Check Results (UVA, cm^{-1})				
Date	**350 nm**	**313 nm**	**257 nm**	**235 nm**
1/8/2019	0.211	0.0980	0.286	0.252
1/9/2019	0.211	0.0990	0.287	0.252
1/16/2019	0.212	0.0990	0.287	0.253
3/12/2019	0.211	0.0980	0.286	0.252
3/13/2019	0.210	0.0980	0.285	0.251
3/14/2019	0.212	0.100	0.288	0.253
3/19/2019	0.210	0.099	0.286	0.251
4/18/2019	0.213	0.099	0.287	0.253
Expected Value	**0.210**	**0.0968**	**0.284**	**0.249**

Table 3 Holmium Oxide Calibration Check Results				
Date	**Wavelength of Measured Peak**			
1/8/2019	287.4	277.9	250.3	241.3
1/9/2019	287.3	277.9	250.3	241.3
1/16/2019	287.4	278.2	250.4	241.5
3/12/2019	287.5	278.3	250.7	241.8
3/13/2019	287.5	278.2	250.4	241.4
3/14/2019	287.5	278.2	250.7	241.8
3/19/2019	287.3	277.9	250.4	241.3
4/18/2019	287.4	277.9	250.3	241.3
Expected Value	**287.2 ± 0.11 nm**	**278.1 ± 0.11 nm**	**249.9 ± 0.11 nm**	**241.1 ± 0.11 nm**

Table 4 Rare Earth Calibration Check Results				
Date	**Wavelength of Measured Peak**			
1/8/2019	253.7	239.9	221.9	210.9
1/9/2019	253.5	240.3	221.8	210.6
1/16/2019	253.5	240.1	222.1	211.0
3/12/2019	253.8	240.2	222.2	211.2
3/13/2019	253.3	240.2	222.1	211.0
3/14/2019	253.3	240.3	222.2	211.3
3/19/2019	253.5	240.3	222.0	210.9
4/18/2019	253.6	240.3	221.9	210.9
Expected Value	**253.7 ± 0.11 nm**	**240.4 ± 0.11 nm**	**222.6 ± 0.11 nm**	**211.4 ± 0.11 nm**

Table 5 Secondary Calibration Check			
Date	**UVA**		
	Real Tech Analyzer	**DR 5000 Spectrophotometer**	**Difference**
1/8/2019	0.2729	0.2790	0.0061
1/9/2019	0.2682	0.2701	0.0019
1/16/2019	0.2744	0.2704	-0.0040
3/12/2019	0.2867	0.2773	-0.0094
3/13/2019	0.2837	0.2830	-0.0007
3/14/2019	0.2989	0.2979	-0.0010
3/19/2019	0.2641	0.2660	0.0019
4/18/2019	0.2767	0.2741	-0.0026

Table 6 Absorbance Values of Test Water			
Absorber	**LSA**	**LSA**	**LSA**
Wavelength (nm)	**99.20 % UVT**	**64.86% UVT**	**88.50 % UVT**
250	0.0035	0.2480	0.0706
251	0.0035	0.2310	0.0655
252	0.0035	0.2160	0.0615
253	0.0031	0.2020	0.0575
254	0.0035	0.1880	0.0531
255	0.0035	0.1780	0.0501
256	0.0039	0.1700	0.0477
257	0.0039	0.1630	0.0458
258	0.0035	0.1570	0.0443
259	0.0031	0.1520	0.0429
260	0.0031	0.1490	0.0424
Slope between 253 and 254 nm	**4.38×10^{-4}**	**-1.40×10^{-2}**	**-4.44×10^{-3}**

Appendix F

FLOW METER AND POWER METER CALIBRATION CERTIFICATES

Endress+Hauser
People for Process Automation

Flow Calibration with Adjustment

30240012-2815663

1000194758
Purchase order number

US-3004861007-10 / Endress+Hauser Flowtec
Order N°/Manufacturer

53W7F-UPGB1RA0BAAA
Order code

PROMAG 53 W 30"
Transmitter/Sensor

F700B116000
Serial N°

-
Tag N°

FCP-9.B
Calibration rig

10936.72 us.gal/min (≙ 100%)
Calibrated full scale

Service interface
Calibrated output

1.1939
Calibration factor

3
Zero point

80.1 °F
Water temperature

Flow [%]	Flow [us.gal/min]	Duration [s]	V target [us.gal]	V meas. [us.gal]	Δ o.r.* [%]	Outp.** [mA]
12.1	1320.1	200.0	4400.65	4396.13	-0.10	5.93
49.8	5441.0	100.1	9073.06	9085.96	0.14	11.97
100.4	10980	100.1	18313.7	18319.7	0.03	20.07
100.5	10987	100.1	18324.4	18318.8	-0.03	20.07
-	-	-	-	-	-	-
-	-	-	-	-	-	-
-	-	-	-	-	-	-
-	-	-	-	-	-	-
-	-	-	-	-	-	-
-	-	-	-	-	-	-

*o.r.: of rate

**Calculated value (4 - 20 mA)

Measured error % o.r.

Tolerance limit: ±0.2% o.r.* ± Zero stability

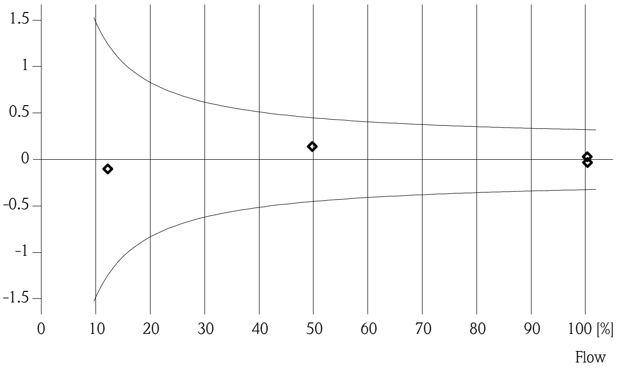

For detailed data concerning output specifications of the unit under test, see Technical Information (TI), chapter Performance characteristics.

The calibration is traceable to the N.I.S.T. through standards certified at preset intervals.

Endress+Hauser Flowtec operates ISO/IEC 17025 accredited calibration facilities in Reinach (CH), Cernay (FR), Greenwood (USA), Aurangabad (IN) and Suzhou (CN).

07-12-2012
Date of calibration

J. Westmoreland
Operator

Endress+Hauser Flowtec, Division USA
2330 Endress Place
Greenwood, IN 46143

Certified acc. to
ISO 9001, Reg.-N° 030502.2
ISO 14001, Reg.-N° EMS561046

Endress+Hauser
People for Process Automation

Flow Calibration with Adjustment

30074694-1450232

41755053
Purchase order number

US-49320691-10 / Endress+Hauser Flowtec
Order N°/Manufacturer

53W3H-UL0B1RA0BAAA
Order code

PROMAG 53 W 12"
Transmitter/Sensor

7C00C816000
Serial N°

–
Tag N°

FCP-20 LARGE
Calibration rig

5601.967 GPM (≙ 100%)
Calibrated full scale

Calibration Interface
Calibrated output

1.3044
Calibration factor

0
Zero point

71.2 °F
Water temperature

Flow [%]	Flow [GPM]	Duration [sec]	V target [US GAL]	V meas. [US GAL]	Δ o.r.* [%]	Outp.** [mA]
5.6	313.7	120.6	630.896	628.410	-0.39	4.89
39.8	2229.6	45.8	1700.27	1700.02	-0.01	10.37
40.4	2263.2	45.6	1719.19	1719.48	0.02	10.47
96.1	5381.8	20.7	1860.50	1861.29	0.04	19.38
–	–	–	–	–	–	–
–	–	–	–	–	–	–
–	–	–	–	–	–	–
–	–	–	–	–	–	–
–	–	–	–	–	–	–
–	–	–	–	–	–	–

*o.r.: of rate
**Calculated value (4 - 20 mA)

Measured error % o.r.

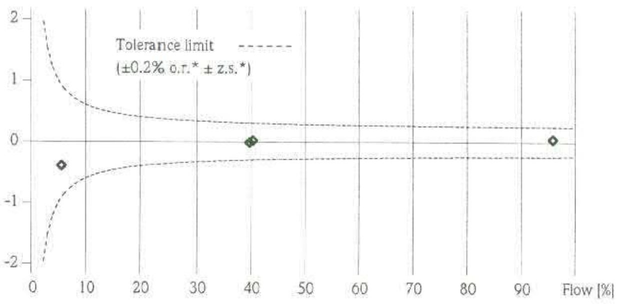

*z.s.: Zero stability

For detailed data concerning output specifications of the unit under test, see technical informations (TI), chapter Performance characteristics.
The calibration is traceable to the N.I.S.T. through standards certified at preset intervals.

12-12-2005
Date of calibration

Endress+Hauser Flowtec, Division USA
2330 Endress Place
Greenwood, IN 46143

Tim Swick

Tim Swick
Operator

Certified acc. to
MIL-STD-45662A
ISO 9001, Reg.-N° 030502.2

Endress+Hauser
People for Process Automation

Parameter Setting

1450232

41755053 Purchase order number	PROMAG 53 W Transmitter/Sensor
US-49320691-10 / Endress+Hauser Flowtec Order N°/Manufacturer	12" Nominal diameter
53W3H-UL0B1RA0BAAA Order code	- Tag N°
7C00C816000 Serial N°	

Device Software	V2.00.00
Language Package	WEA
Communication Type	HART
Device Revision	5
Current Output 1	
Value for 0/4mA	0 USgal/min
Value for 20mA	2400 USgal/min
Current Span	4-20mA HART
Impulse Output 1	
Pulse Value	25 gal/P
Output Signal	PASSIVE/POSITIVE

The above parameters are set according to your order.
Please refer to the Operating Manual for any parameters not mentioned.

12-12-2005
Date

Endress+Hauser Flowtec, Division USA
2330 Endress Place
Greenwood, IN 46143

Endress+Hauser
People for Process Automation

Flow Calibration without Adjustment

30097751-5002307

WWRA-001303-F	FCP-20 MEDIUM
Purchase order number	Calibration rig
US-19051748-10 / Endress+Hauser Flowtec	625.0 GPM (≙ 100%)
Order N°/Manufacturer	Calibrated full scale
30FT1H-MD1ED11F22B	Current 4 - 20 mA
Order code	Calibrated output
PROMAG 30 F 4"	1.1890
Transmitter/Sensor	Calibration factor
5002307	-5
Serial N°	Zero point
-	72.1 °F
Tag N°	Water temperature

Flow [%]	Flow [GPM]	Duration [sec]	V target [US GAL]	V meas. [US GAL]	Δ o.r.* [%]	Outp.** [mA]
4.2	26.4	120.6	53.059	53.526	0.88	4.68
50.6	316.3	60.5	319.041	321.606	0.80	12.16
50.6	316.4	60.5	319.227	321.680	0.77	12.16
99.3	620.8	60.9	630.246	633.660	0.54	19.98
-	-	-	-	-	-	-
-	-	-	-	-	-	-
-	-	-	-	-	-	-
-	-	-	-	-	-	-
-	-	-	-	-	-	-
-	-	-	-	-	-	-

*o.r.: of rate
**Calculated value (4 - 20 mA)

Measured error % o.r.

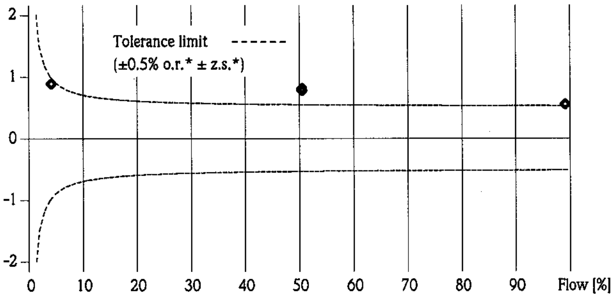

*z.s.: Zero stability

For detailed data concerning output specifications of the unit under test, see technical informations (TI), chapter Performance characteristics.
The calibration is traceable to the N.I.S.T. through standards certified at preset intervals.

John Monaghan

03-19-2007
Date of calibration

John Monaghan
Operator

Endress+Hauser Flowtec, Division USA
2330 Endress Place
Greenwood, IN 46143

Certified acc. to
MIL-STD-45662A
ISO 9001, Reg.-N° 030502.2

Endress+Hauser
People for Process Automation

Flow Calibration with Adjustment

30097754-5002307

WWRA-001303-F
Purchase order number

US-19051748-10 / Endress+Hauser Flowtec
Order N°/Manufacturer

30FT1H-MD1ED11F22B
Order code

PROMAG 30 F 4"
Transmitter/Sensor

5002307
Serial N°

-
Tag N°

FCP-20 MEDIUM
Calibration rig

625.0 GPM (≙ 100%)
Calibrated full scale

Current 4 - 20 mA
Calibrated output

1.1814
Calibration factor

-5
Zero point

72.2 °F
Water temperature

Flow [%]	Flow [GPM]	Duration [sec]	V target [US GAL]	V meas. [US GAL]	Δ o.r.* [%]	Outp.** [mA]
4.4	27.2	120.6	54.628	54.788	0.29	4.70
49.2	307.3	60.9	311.759	311.718	-0.01	11.87
49.2	307.4	60.9	311.839	311.859	0.01	11.87
98.7	616.6	60.9	625.533	624.837	-0.11	19.77
-	-	-	-	-	-	-
-	-	-	-	-	-	-
-	-	-	-	-	-	-
-	-	-	-	-	-	-
-	-	-	-	-	-	-
-	-	-	-	-	-	-

*o.r.: of rate
**Calculated value (4 - 20 mA)

Measured error % o.r.

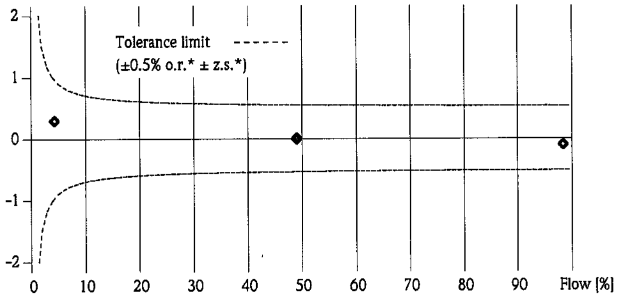

*z.s.: Zero stability

For detailed data concerning output specifications of the unit under test, see technical informations (TI), chapter Performance characteristics.
The calibration is traceable to the N.I.S.T. through standards certified at preset intervals.

John Monaghan

03-19-2007
Date of calibration

Endress+Hauser Flowtec, Division USA
2330 Endress Place
Greenwood, IN 46143

John Monaghan
Operator

Certified acc. to
MIL-STD-45662A
ISO 9001, Reg.-N° 030502.2

Repair Authorization & Report

Endress+Hauser
People for Process Automation

RAR#WWRA-001303-F

This form is used as authorization to return equipment to Endress+Hauser and show charges for repairing equipment.
It is not an invoice.

Endress + Hauser Instruments 2350 Endress Place Greenwood, IN 46143 Sales: (888) ENDRESS Service Toll-Free: (800) 642-8737 Service Fax: (317) 535-1495	**Date RA Issued: 02/21/2007** **Issued By: Sandra Newman** **Repair Coordinator: Sandra Newman** **Date Equipment Received: 03/08/2007**

Customer Site - Shipping Address:	**Customer Billing Address:**
CAROLLO ENGIBNEERS 2700 Ygnacio Valley Rd. Ste: 300 Walnut Creek,CA 94598	CAROLLO ENGIBNEERS 2700 Ygnacio Valley Rd. Ste: 300 Walnut Creek, CA 94598

Original P.O.	Customer Contact	Customer E-Mail	Customers P.O. # for Repair
	Tavy Wade	**twade@carollo.com**	**Po# 7319A.00(3-16-07)**
Original Sales Order	Customer Phone	Sales Office	Repair Sales Order #
	925-932-1710	**IPT Sales**	
Original Ship Date	Customer Fax		
	925-930-0208		

	Product Details	**Work Performed**
1	Tag Number: Product Type: Complete Unit Product Line: Flow Technology: Electro-magnetic F Model #:30F...-> PROMAG 30 Configuration:30FT1H-MD1ED11F22B Serial Number:G315002307- Warranty: No Status: Repair Completed Rec'd by Repair: 03/08/2007 Date Inspected: 03/14/2007 Date Quoted: 03/15/2007 Date Authorized: 03/16/2007 Date Shipped:	THE UNIT HAS BEEN BENCH TEST WITH "NO DEFECTS FOUND" THE UNIT HAS BEEN CALIBRATED. * FINAL FUNCTIONAL TEST COMPLETED.

Please Contact Sandra Newman at (800) 642-8737 with any questions or concerns.

Portland UV Validation Facility: Magnetic Flow Meter Evaluations

Paired comparisons using two meters in series.

During the course of operations at the Portland UV Validation Facility, comparative testing of flow meters has been possible when two magnetic flow meters have been run in series. Testing to date has allowed pair comparisons of flow meters of 4”, 10”, 12”, 16”, 24”, 30” and 48”. In addition, manual bucket testing down to flow rates of 5 gpm has been performed.

Date collected from October 2005 through December 2015 are summarized in Figure 1, which shows flow meter (or bucket test) data for the smaller of the two flow meters (X-axis) compared to data from the larger of the two in the paired test (Y-axis). As shown, when all comparative data are treated as a single data set, the paired testing shows good agreement between flow meters suggesting flow meters are generally within 1 percent of each other. As shown, this testing covers the range of flows from 5 gpm to approximately 48,670 gpm (70 MGD).

While this testing is not an absolute confirmation of flow rates for each flow meter, which would require gravimetric testing not possible in the field, it does provide reasonable assurance that individual flow meters are performing according to specifications.

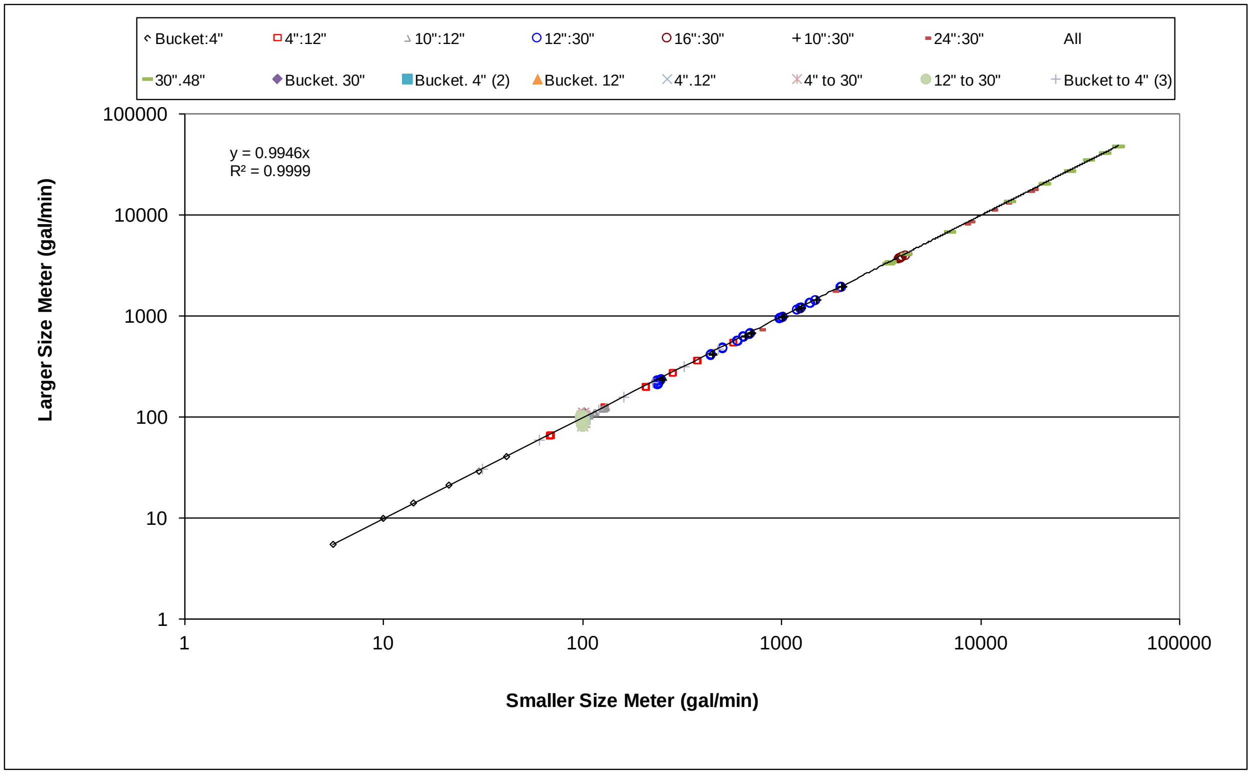

Figure 1. Summary of Paired Flowmeter Testing Conducted at Portland UV Validation Facility

Tank Draw down Testing using On-Site Water Storage Reservoir

Absolute (volumetric) flow testing has been conducted using the 12” and 30” flow meters through tank drawdown measurements. Using tank level and volume data supplied by the

Portland Water Bureau for the on-site, 2-million gallon groundwater storage tank, draw down tests have been conducted to compare the total water measured by the flow meters to a calculated value based on differential tank level and known volume of water per foot of tank level change. Data provided by the PWB indicates that for each foot of tank level change (in the straight-sided portion, from about 17.5 ft to the bottom of the tank), is equivalent to 70995 gallons of water.

The first draw down test was conducted using the 30” and 12” flow meters in series on 12 December 2008. These results are shown in Figure 2. During this test, a total of approximately 544,000 gallons of water was run through the test train. Flow meter totals from each meter were recorded over the course of the test. These readings were compared to SCADA data of tank level and flow total were calculated. As shown in Figure 2, flow rates ranged from 6 MGD to 4.5 MGD during the test. The 12” flow meter showed close agreement between calculated flow totals, with an average deviation of 0.6 percent. The 30” flow meter showed an average deviation of 4.9 percent.

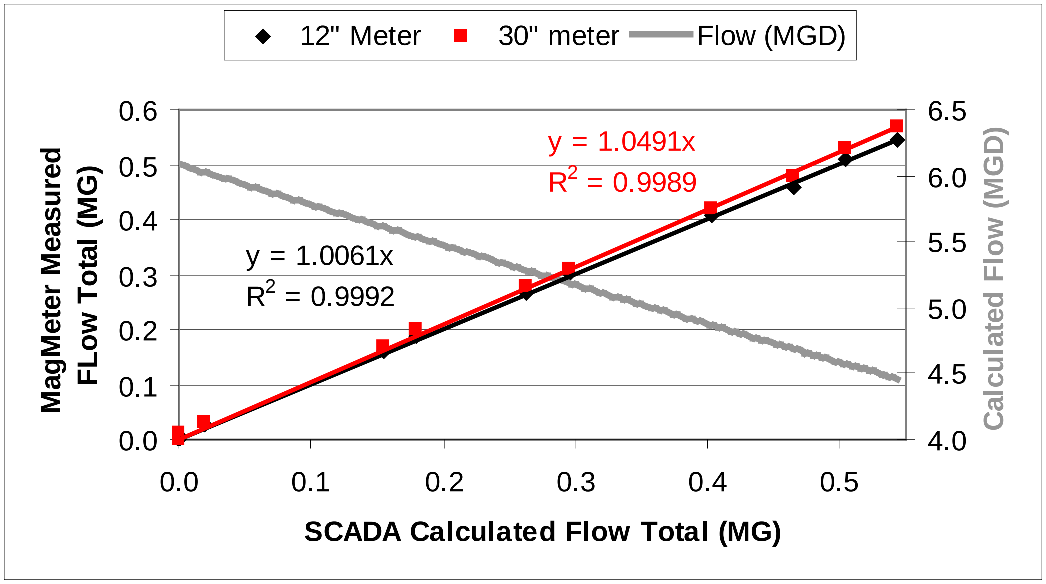

Figure 2: Tank Draw down Testing Performed 12 December 2008

During June 2009, Rosemount filed services performed a flow meter diagnostic using a calibrated flow tube simulator to confirm that the electronics of the 30” flow meter were running within specifications. At the time, it was suggested that a second drawdown test be run using only to 30” flow meter to allow for higher flows.

Draw down testing was repeated on 15 June 2009 using only the 30” flow meter at flow rates ranging from 21 to 11.5 MGD. These data, shown in Figure 3 indicate flow meter accuracy within 0.7 percent of calculated flow totals. On 7 September 2009, a third draw down test was performed using only the 30” flow meter at flows ranging from 41 to 7 MGD showed flow meter accuracy of less than 0.1 percent from calculated flow totals. (Figure 4)

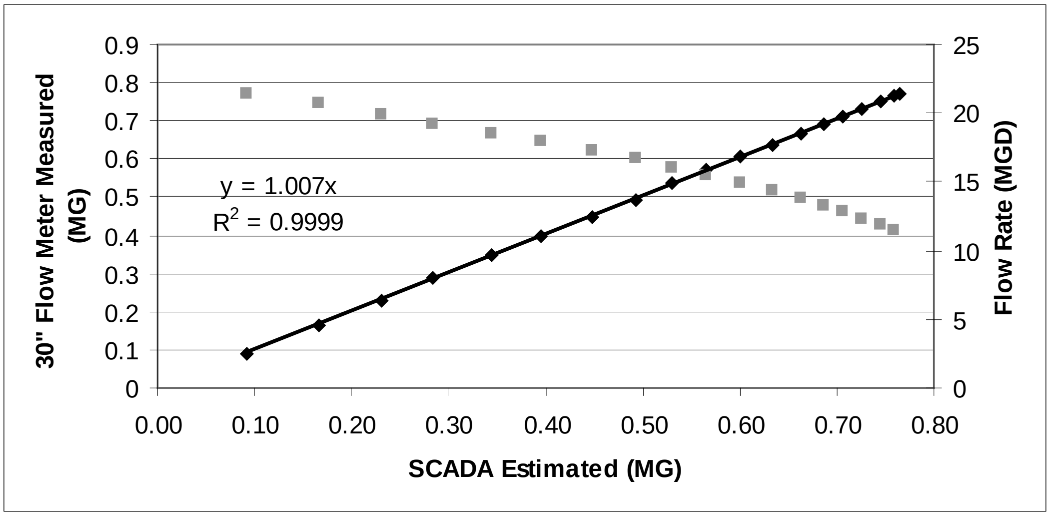

Figure 3. Tank Draw down Test Performed 15 June 2009 using 30” Flow Meter.

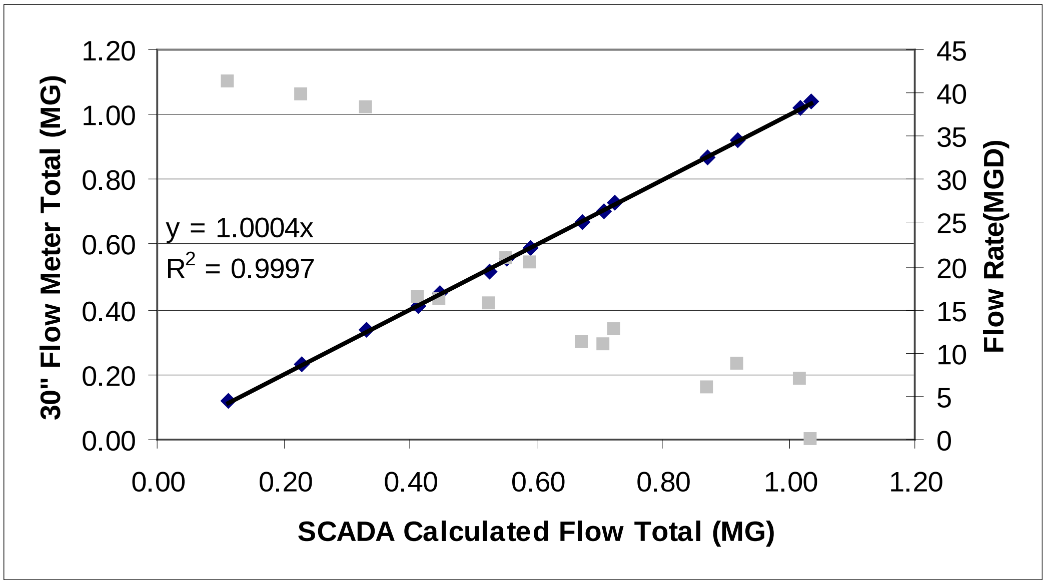

Figure 4. Tank Draw down Test Performed 7 September 2009 using 30” Flow Meter.

The most recent tank drawdown test was conducted on 27 February 2015 for the 30” flow meter only, at flows ranging from 17.08 to 6.16 MGD. The data presented in Figure 5 indicate an average variation between the flow meter and tank level calculation of 0.86 percent.

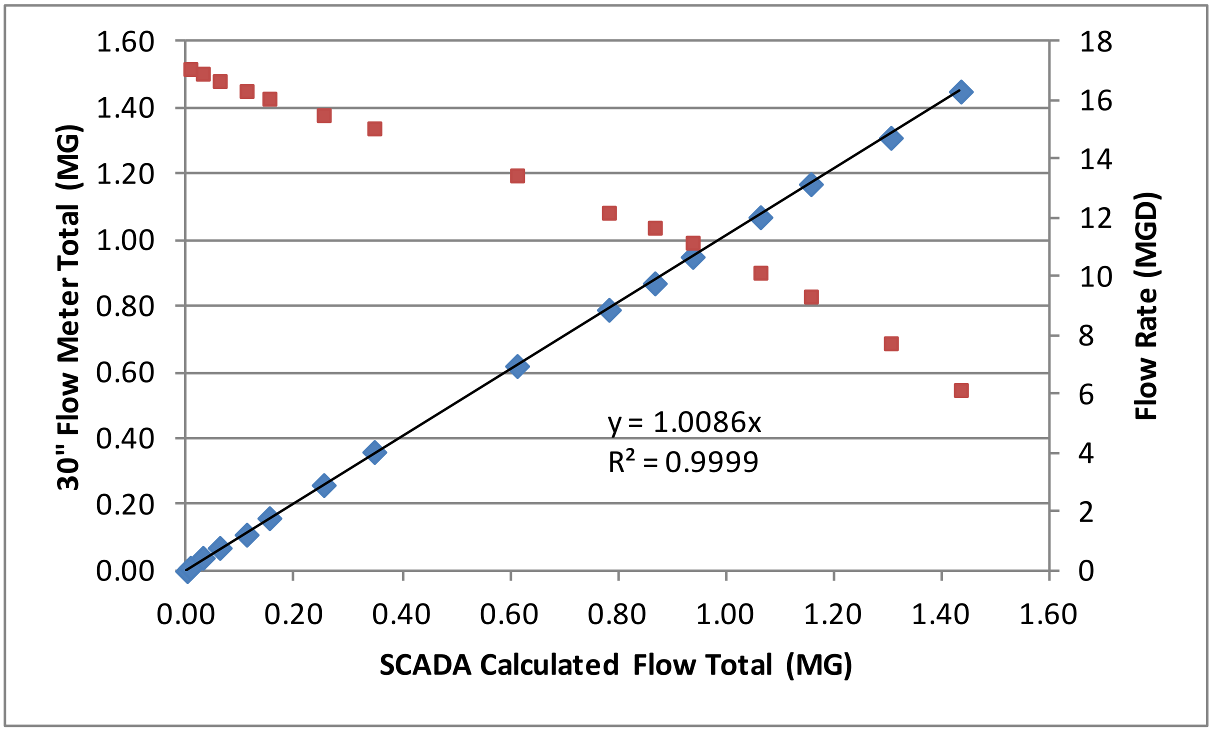

Figure 5. Tank Draw down Test Performed 27 February 2015 using 30” Flow Meter.

Based on the results of paired flow meter testing and tanks draw down testing, the body of data suggests that all flow meters are performing within manufacturer’s specifications.

TRANSCAT® CERTIFICATE OF CALIBRATION

Trust in every measure

Customer: CAROLLO ENGINEERS
720 SOUTHWEST WASHINGTON ST
SUITE 550
PORTLAND, OR 97205
PO Number: 11.02 UVV

ANAB
ACCREDITED
ISO/IEC 17025
ANSI/NCSL Z540-I
ANAB AC-2489.01

ilac-MRA

Certificate/SO Number: 2-B5I1T-20-1 Revision 0

Manufacturer: Fluke Corporation
Model Number: 434
Description: Power Analyzer, 3 Phase
Serial Number: DM8750027
ID: 6000227

As-Found: In Tolerance
As-Left: In Tolerance

Calibration Date: Dec 21, 2017
Due Date: Dec 21, 2018

Calibrated To: Manufacturer Specification
Calibration Procedure: 1-AC51511-1

Transcat Calibration Laboratories have been audited and found in compliance with ISO/IEC 17025:2005. Accredited calibrations performed within the Lab's Scope of Accreditation are indicated by the presence of the Accrediting Body's Logo and Certificate Number. Any measurements on an accredited calibration not covered by that Lab's Scope of Accreditation are listed in the notes section of the certificate. SCC, NRC, CLAS or ANAB do not guarantee the accuracy of an individual calibration by accredited laboratories.

Transcat calibrations, as applicable, are performed in compliance with the requirements of the Transcat Quality Manual QAC-P01-000 Revision 1.0, the customer's Purchase Order and/or Quality Agreement requirements, ISO 9001:2008, ANSI/NCSL Z540.1-1994 (R2002). Complete records of work performed are maintained by Transcat and are available for inspection. Laboratory standards used in the performance of this calibration are listed below.

Transcat documents the traceability of measurements to the SI units through the National Institute of Standards and Technology (NIST), or the National Research Council of Canada (NRC), or other national measurement institutes (NMI) that are signatories to the CIPM Mutual Recognition Arrangement, or accepted fundamental and/or natural physical constants, or by the use of specified methods, consensus standards or ratio type measurements. Documentation supporting traceability information is available for review upon written request at a Transcat facility. The measured quantity and the measurement uncertainty are required for further dissemination of traceability.

Uncertainties are reported with a coverage factor k=2, providing a level of confidence of approximately 95%. All calibrations have been performed using processes having a TUR of 4:1 or better (3:1 for mass calibrations), unless otherwise noted. The Test Uncertainty Ratio (TUR) is calculated in accordance with NCSL International RP-18. For mass calibrations: Conventional mass referenced to 8.0 g/cm³.

The results in this report relate only to the item calibrated or tested. Recorded calibration data is valid at the time of calibration within the stated uncertainties at the environmental conditions noted. The determination of compliance to the specification is specific to the model/serial no./ID no. referenced above based on the tolerances shown; these tolerances are either the original equipment manufacturers (OEM's) warranted specifications or the client's requested specifications. This certificate may not be reproduced except in full, without the written approval of Transcat. Additional information, if applicable may be included on separate report(s).

As Found/As Left Data

Description	Setpoints	Accuracy	Low Limit	High Limit	As Found / As Left	OOT	TUR
AC Current Measure w/i400s							
A/L1 w/i400s 40A Range 60Hz	39.0Arms	±(1% Rdg + 5 LSD)	38.1	39.9	38.7 Arms		1.7 : 1
B/L2 w/i400s 60Hz	39.0Arms	±(1% Rdg + 5 LSD)	38.1	39.9	39.3 Arms		1.7 : 1
C/L3 w/i400s 60Hz	39.0Arms	±(1% Rdg + 5 LSD)	38.1	39.9	38.7 Arms		1.7 : 1
N w/i400s 60Hz	39.0Arms	±(1% Rdg + 5 LSD)	38.1	39.9	39.1 Arms		1.7 : 1
A/L1 w/i400s 400A Range 60Hz	390Arms	±(1% Rdg + 5 LSD)	381	399	391 Arms		2.4 : 1
B/L2 w/i400s 60Hz	390Arms	±(1% Rdg + 5 LSD)	381	399	392 Arms		2.4 : 1

Date Received: December 20, 2017
Service Level : R3

Customer Number: 1-598303-000

TRANSCAT® Trust in every measure

CALIBRATION SERVIC

CERTIFICATE OF CALIBRATION

ANAB ACCREDITED ISO/IEC 17025 ANSI/NCSL Z540-I

ANAB AC-2489.01

ilac-MRA

Customer: CAROLLO ENGINEERS
720 SOUTHWEST WASHINGTON ST
SUITE 550
PORTLAND, OR 97205

PO Number: 11.02 UVV

Certificate/SO Number: 2-B5I1T-20-1 Revision 0

As Found/As Left Data

Description	Setpoints	Accuracy	Low Limit	High Limit	As Found / As Left	OOT	TUR
AC Current Measure w/i400s							
C/L3 w/i400s 60Hz	390Arms	±(1% Rdg + 5 LSD)	381	399	388 Arms		2.4 : 1
N w/i400s 60Hz	390Arms	±(1% Rdg + 5 LSD)	381	399	387 Arms		2.4 : 1

Traceable Standards

Asset	Manufacturer	Model Number	Description	Cal Date	Due Date	Traceability Number	Use
774W	Fluke Corporation	5520A-SC1100	Multifunction Calibrator, w/Scope Option	13-Sep-17	30-Sep-18	5-&774W-9-1	AF/AL

The use of the standard is defined as: AF - used for as-found readings, AL - used for as-left readings.

Environmental Data

Temperature	Relative Humidity	Temp / RH Asset
71.71°F /22.06°C	32.10%	1012W

Calibrated At:
14058 SW Milton Ct
Portland, OR 97224

Facility Responsible:
14058 SW Milton Ct
Portland, OR 97224
800-828-1470

Calibrated By:
Electronically Signed By:
Neil Greuel

Neil Greuel Dec 21, 2017
Calibration Technician 14:12:10 -08:00

Reviewed By:
Electronically Signed By:
Marc Jaso

Marc Jaso Dec 21, 2017
Lab Manager 14:43:49 -08:00

Unit Barcode: 901B0099445

Date Received: December 20, 2017
Service Level : R3

Certificate - Page 2 of 2

Customer Number: 1-598303-000

OPS-F20-013R1 01/23/2017 FP001R1 10/12/2017

Appendix G

DATA SHEETS FOR THE WF-115-4, WF-125-6, AND WF-225-8 UV REACTORS AND COMPONENTS

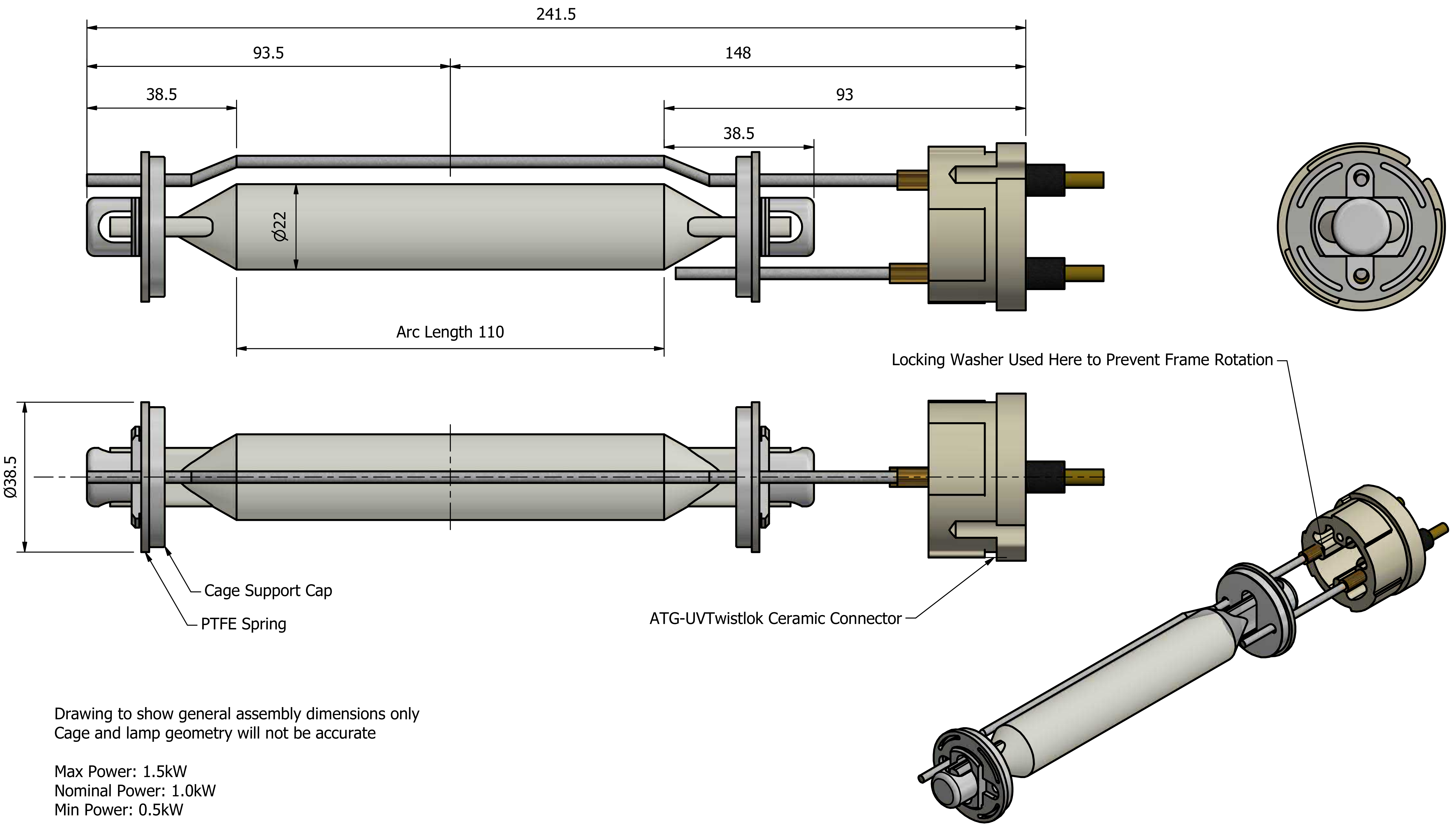

Drawing to show general assembly dimensions only
Cage and lamp geometry will not be accurate

Max Power: 1.5kW
Nominal Power: 1.0kW
Min Power: 0.5kW

Lamp Current @ Max Power: 10Amps

atg
UV Technology
LANCASHIRE
ENGLAND
Tel +44 (0) 1942 216161
Fax +44 (0) 1942 213131
www.atguv.com

CLIENT

TITLE
Caged Lamp MP15

DRAWING No W1502002

A3 A

REV	DATE	DESCRIPTION	DRN	CHK	APP
A	06/03/2015	Issued for Pre-Production Prototype	R.J	R.J.	R.J.

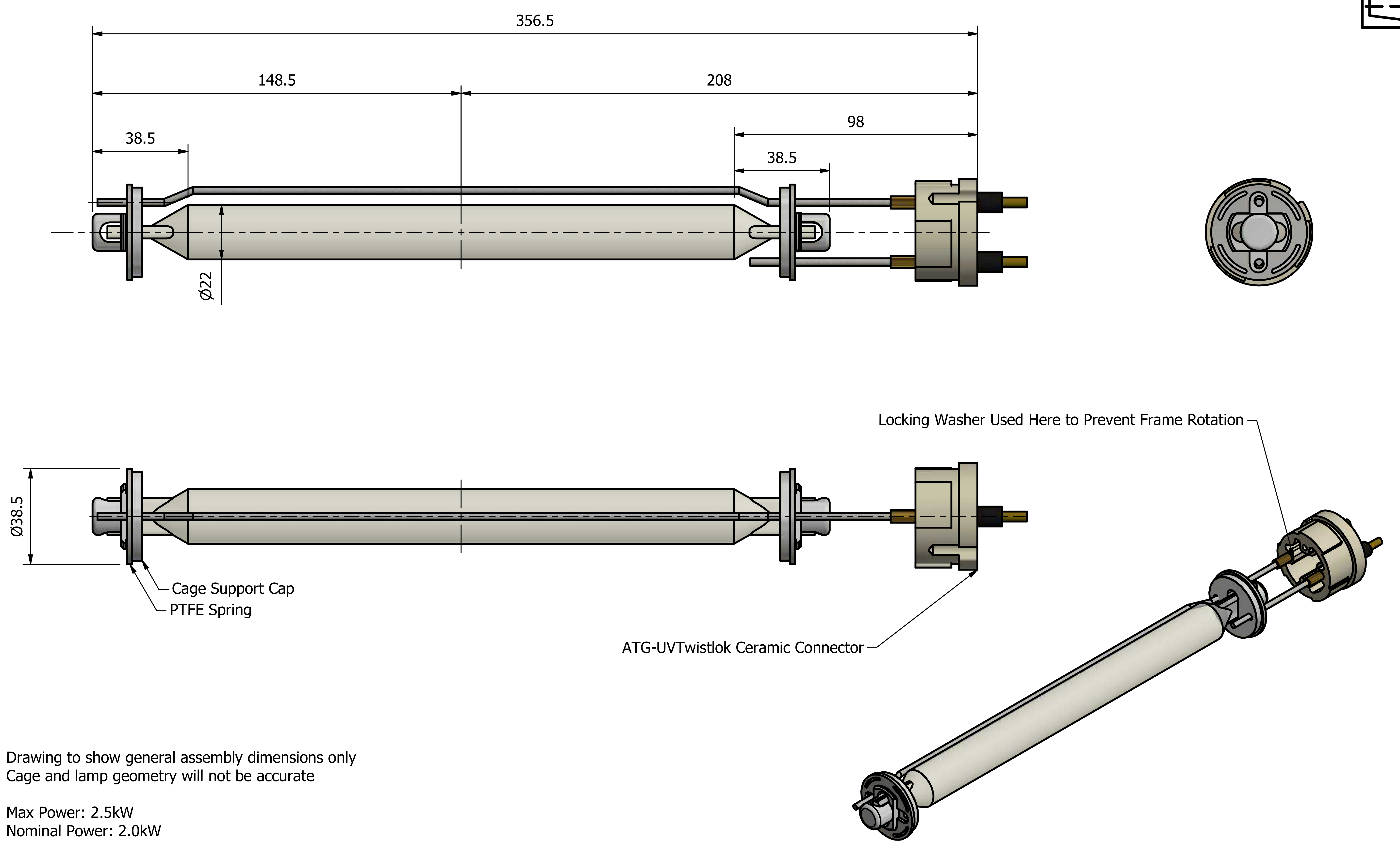

Drawing to show general assembly dimensions only
Cage and lamp geometry will not be accurate

Max Power: 2.5kW
Nominal Power: 2.0kW
Min Power: 0.75kW

Lamp Current @ Max Power: 10Amps

atg UV Technology
LANCASHIRE
ENGLAND
Tel +44 (0) 1942 216161
Fax +44 (0) 1942 213131
www.atguv.com

CLIENT

TITLE
Caged Lamp MP25

DRAWING No W1502003

A3 A

REV	DATE	DESCRIPTION	DRN	CHK	APP
A	06/03/2015	Issued for Pre-Production Prototype	R.J	R.J.	R.J.

Magnetic Ballast	
Power (kW)	1.5
Supply Voltages (V)	208, 220, 230
Supply Frequencies (Hz)	50, 60
Lamp Voltage (V)	160
Lamp Current (A)	10.4
Termination	Finger Safe
Dimensions (cm) (HxWxD)	12 x 12 x 10
Weight (kg)	10.5
Max Temp (DegC)	155

Magnetic Ballast	
Power (kW)	2.5
Supply Voltages (V)	380, 400, 415
Supply Frequencies (Hz)	50
Lamp Voltage (V)	280
Lamp Current (A)	10
Termination	Finger Safe
Dimensions (cm) (HxWxD)	16 x 16 x 14
Weight (kg)	15
Max Temp (DegC)	155

ENTERPRISE Q LTD
SILICA GLASS PRODUCTS

Fax: +44 (0) 161 777 4899
www.enterprise-q.co.uk

Tubing GE214 Clear Fused Quartz

Used worldwide by the Lamp industry for metal halide, halogen, infra-red and other lamp applications, UV Germicidal, UV Curing, Semiconductor, Thermocouple and Fibre Optic industries, whose performance and quality demands are one of the highest.

GE214 is a natural quartz grade whose high transmission, purity, thermal resistance, low OH (hydroxyl), along with its physical characteristics, and excellent visual properties, make it the ideal Quartz material.

Dimensional Control (mm)

OD	Std OD +/-	LG	Std LG +/-
3 - 6	2%	up to 2540	+19 / -0
> 6 - 20	2%	up to 3060	+19 / -0
> 20 - 40	1%	up to 3060	+75 / -0
> 40 - 50	1%	up to 3060	+75 / -0
3 - 50		Cut lengths	up to +/-0.5

WL	WL +/-
</= 2.0	10%
> 2.0	8%

OD - Outside Diameter; LG – Long; WL – Wall thickness

Typical Physical Properties

Mechanical

Density 2.2x10^{3} kg/m^{3}
Hardness 5.5 - 6.5 Mohs' scale; 570 KHN$_{100}$
Design Tensile Strength 4.8x10^{7} Pa (N/m^{2});7000psi
Design Compressive Strength >1.1x10^{9} Pa;160,000psi
Bulk Modulus 3.7x10^{10} Pa; 5.3x10^{6} psi
Rigidity Modulus 3.1x10^{10} Pa; 4.5x10^{6} psi
Young's Modulus 7.2x10^{10} Pa; 10.5x10^{6} psi
Poisson's Ratio 0.17

Thermal

Coeff. of exp. (20 - 320 °C) 5.5x10^{-7} cm/cm • °C
Thermal Conductivity (20 °C) 1.4 W/m • °C
Specific Heat (20 °C) 670 J/kg • °C
Softening Point 1683 °C
Annealing Point 1215 °C
Strain Point 1120 °C

Electrical

Electrical Resistivity (350 °C) 7x10^{7} ohm cm
Dielectric Constant (20 °C and 1MHz) 3.75
Dielectric Strength (20 °C and 1MHz) 5x10^{7} V/m
Dielectric Loss Factor (20 °C and 1MHz) < 4x10^{-4}
Dissipation Factor (20 °C and 1MHz) < 1x10^{-4}

Index of Refraction 1.4585

Typical Trace Element Composition

(ppm by weight; analysis via Direct Reading Spectrometer)

Type	Al	As	B	Ca	Cd	Cr	Cu	Fe	K	Li	Mg	Mn	Na	Ni	P	Sb	Ti	Zr	OH
GE214	14	<0.002	<0.2	0.4	<0.01	<0.05	<0.05	0.2	0.6	0.6	0.1	<0.05	0.7	<0.1	<0.2	<0.003	1.1	0.8	<5
GE214A	14	<0.002	<0.2	0.4	<0.01	<0.05	<0.05	0.2	0.6	0.6	0.1	<0.05	0.7	<0.1	<0.2	<0.003	1.1	0.8	<1

Average Transmission

(based on 1mm thickness; includes surface loss reflection)

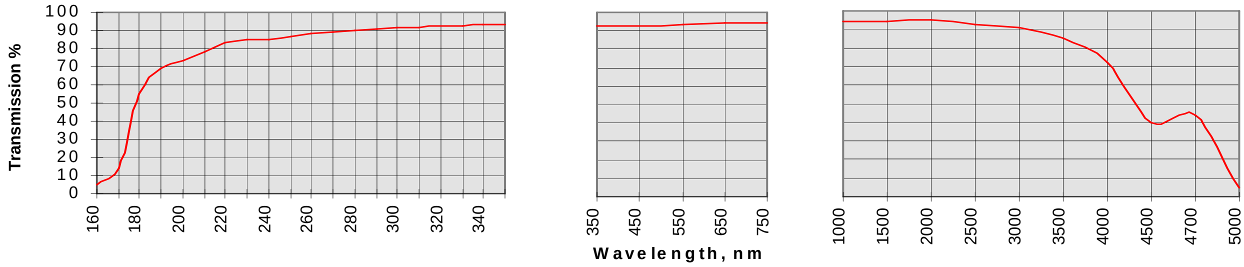

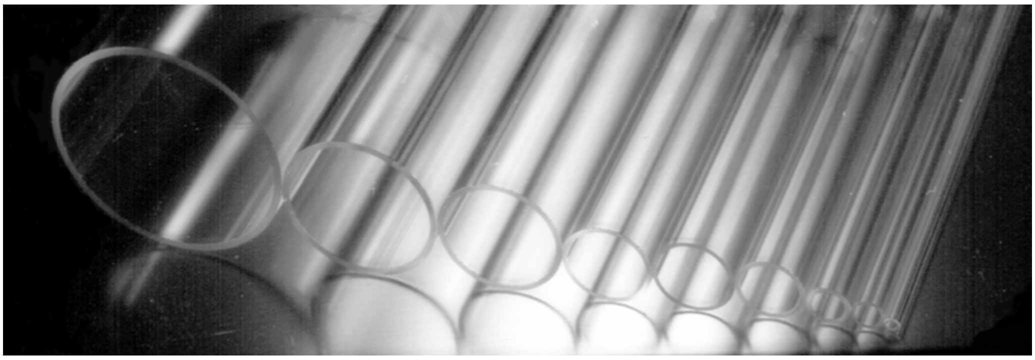

Subject to change without prior notice

`EQ06 Tubing GE214 Clear Fused Quartz.doc`

AUTHORISED GE FABRICATOR & DISTRIBUTOR

FM53599

Registered Office: Laurel House, 173 Chorley New Road, Bolton, BL1 4QZ. Company Registration No: 3166763
Printed on recycled paper

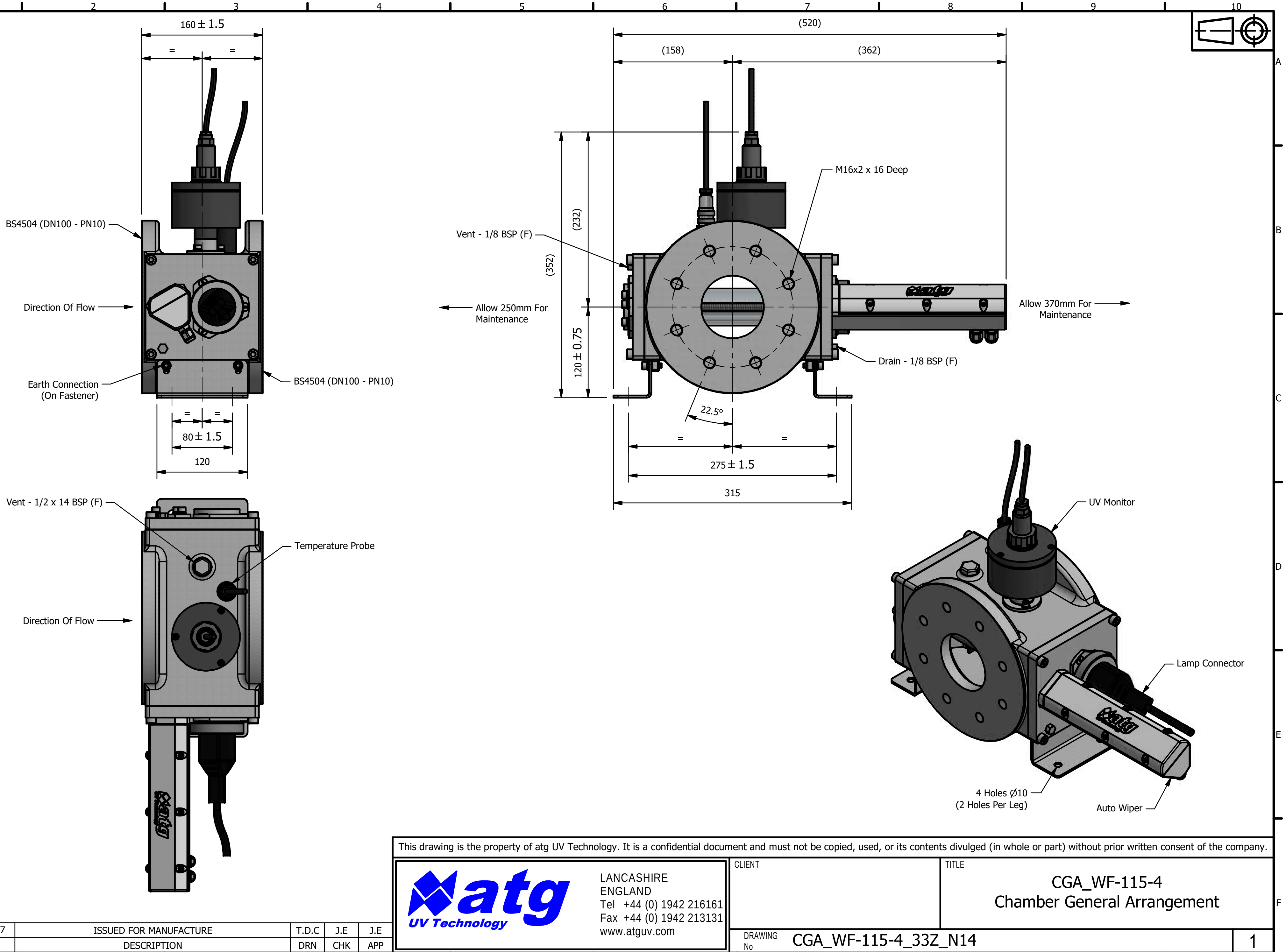

atg UV Technology

LANCASHIRE
ENGLAND
Tel +44 (0) 1942 216161
Fax +44 (0) 1942 213131
www.atguv.com

CLIENT

TITLE

CGA_WF-115-4
Chamber General Arrangement

DRAWING No CGA_WF-115-4_33Z_N14 1

1	30/11/2017	ISSUED FOR MANUFACTURE	T.D.C	J.E	J.E
REV	DATE	DESCRIPTION	DRN	CHK	APP

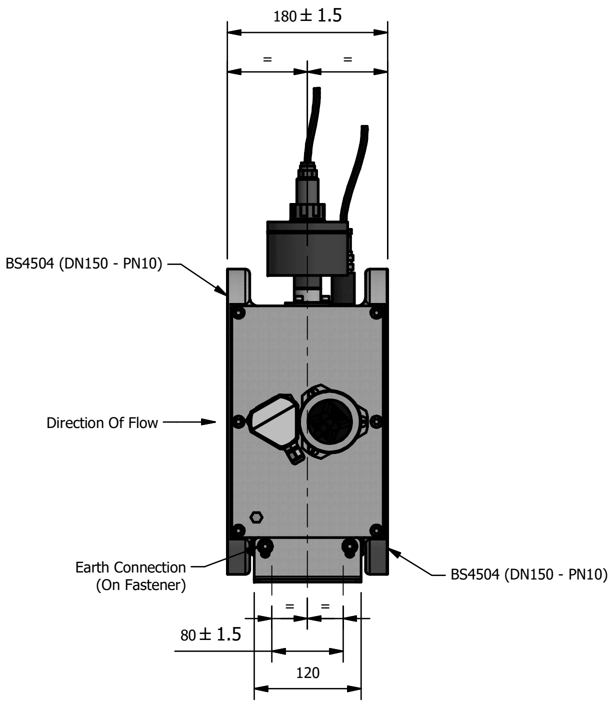

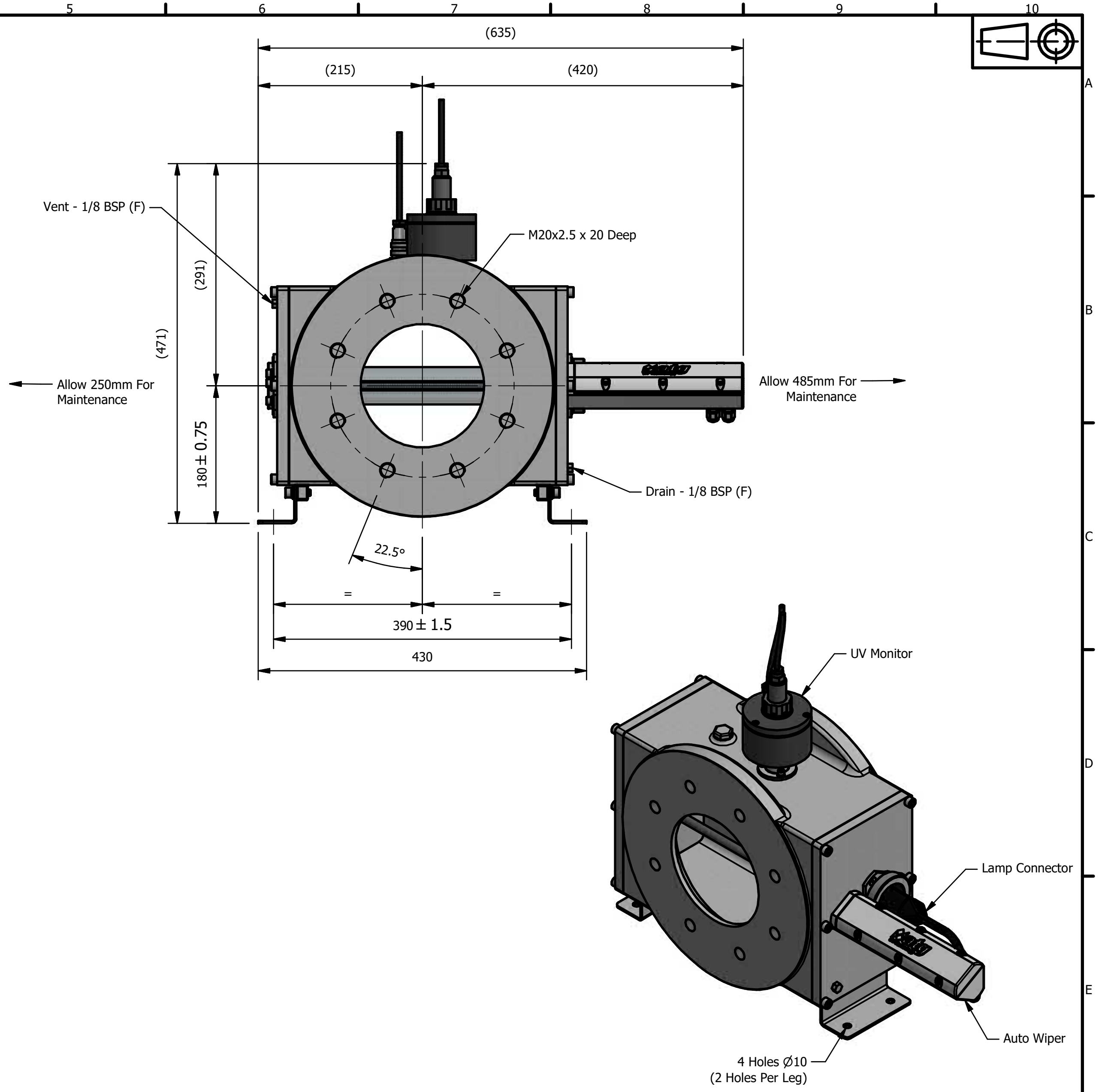

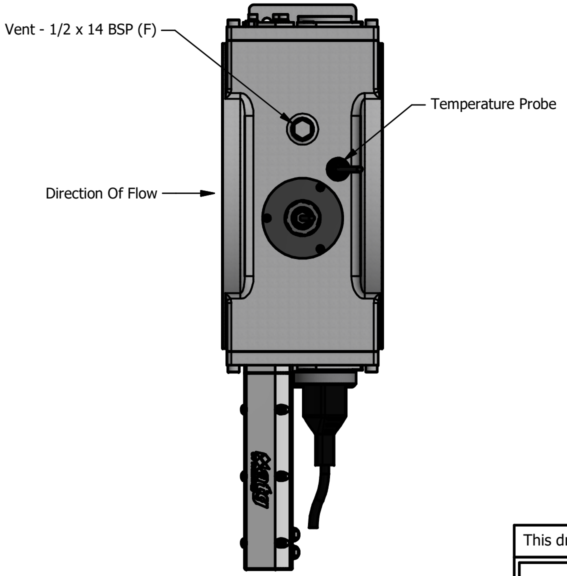

This drawing is the property of atg UV Technology. It is a confidential document and must not be copied, used, or its contents divulged (in whole or part) without prior written consent of the company.

atg UV Technology

LANCASHIRE
ENGLAND
Tel +44 (0) 1942 216161
Fax +44 (0) 1942 213131
www.atguv.com

CLIENT

TITLE
CGA_WF-125-6
Chamber General Arrangement

DRAWING No CGA_WF-125-6_33Z_N14 2

REV	DATE	DESCRIPTION	DRN	CHK	APP
2	06/12/2017	UV MONITOR HEIGHT DECREASED	T.D.C	J.E	J.E
1	30/11/2017	ISSUED FOR MANUFACTURE	T.D.C	J.E	J.E

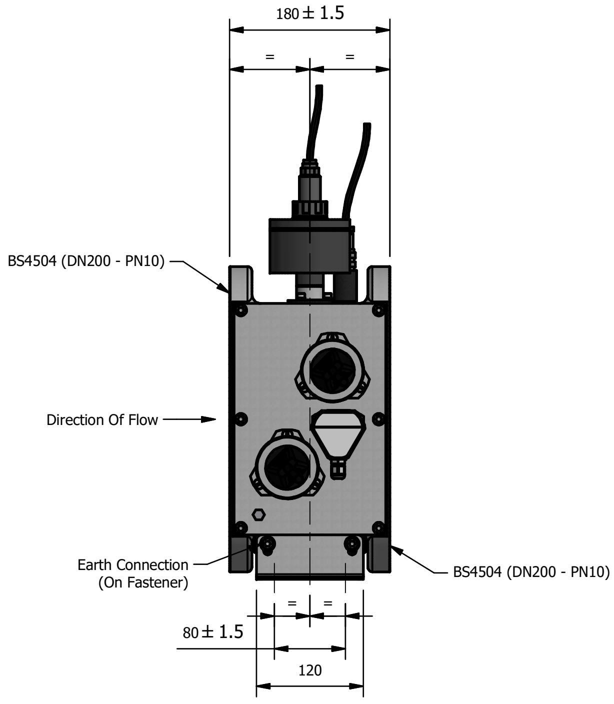

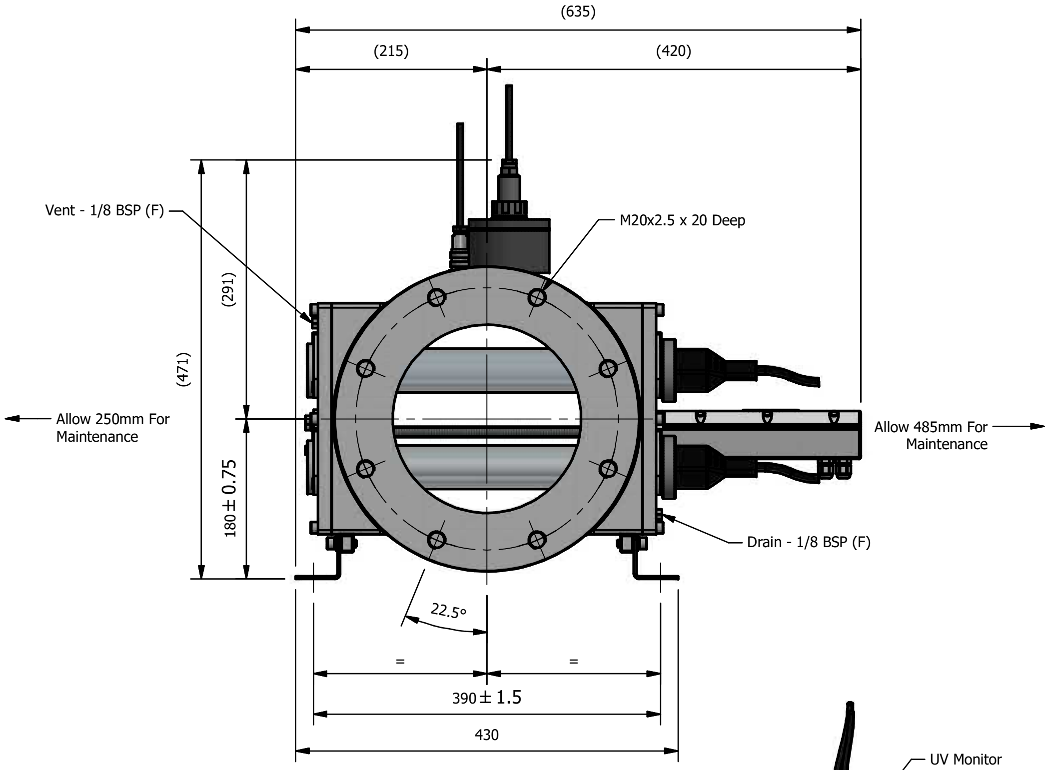

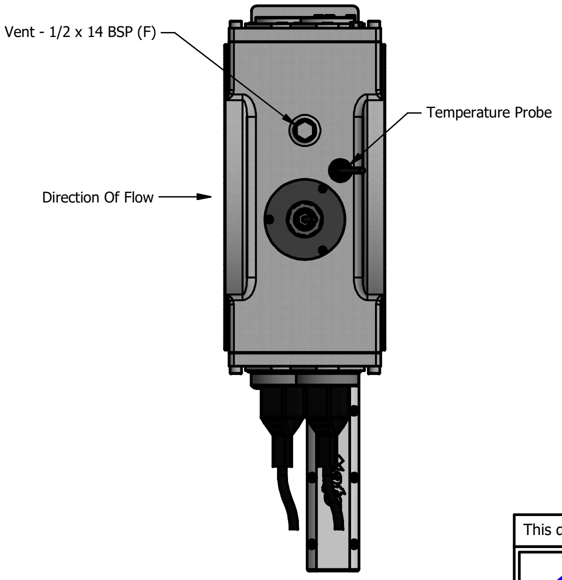

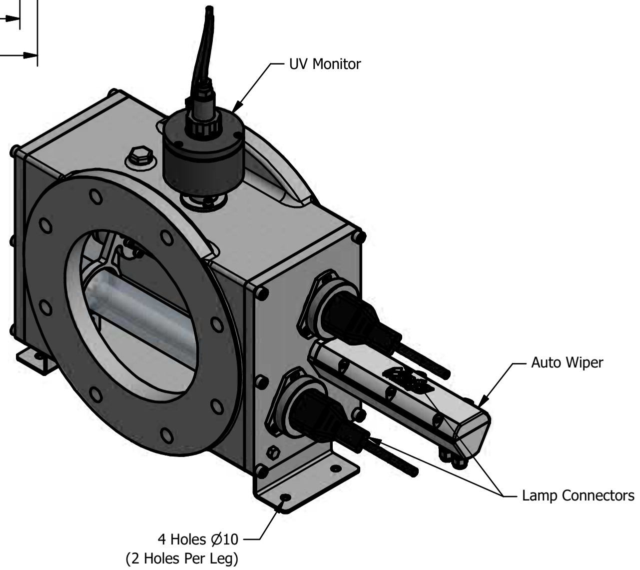

This drawing is the property of atg UV Technology. It is a confidential document and must not be copied, used, or its contents divulged (in whole or part) without prior written consent of the company.

atg
UV Technology

LANCASHIRE
ENGLAND
Tel +44 (0) 1942 216161
Fax +44 (0) 1942 213131
www.atguv.com

CLIENT

TITLE
CGA_WF-225-8
Chamber General Arrangement

DRAWING No CGA_WF-225-8_33Z_N14

2

REV	DATE	DESCRIPTION	DRN	CHK	APP
2	06/12/2017	UV MONITOR HEIGHT DECREASED	T.D.C	J.E	J.E
1	30/11/2017	ISSUED FOR MANUFACTURE	T.D.C	J.E	J.E

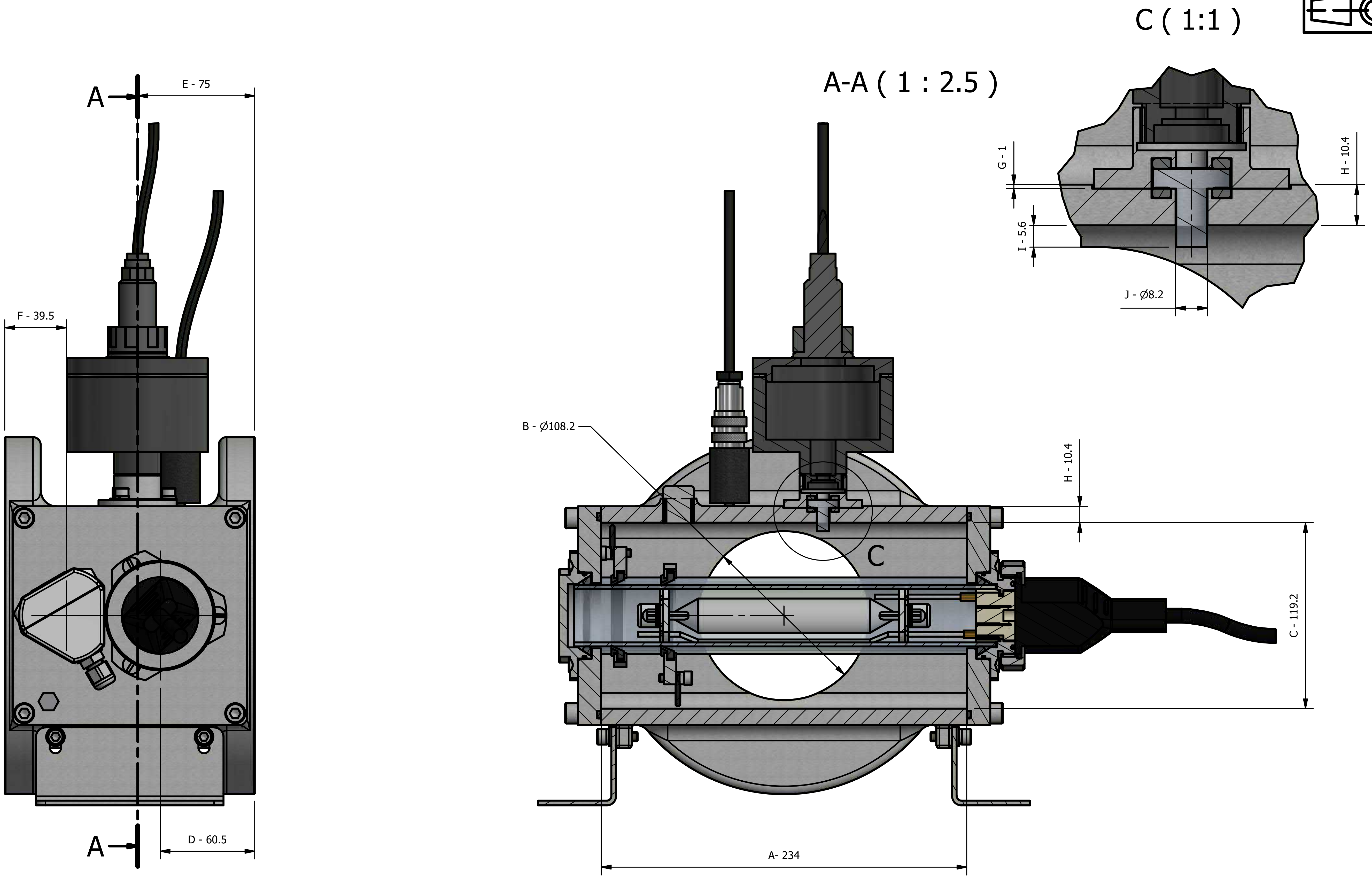

This drawing is the property of atg UV Technology. It is a confidential document and must not be copied, used, or its contents divulged (in whole or part) without prior written consent of the company.

atg
UV Technology

LANCASHIRE
ENGLAND
Tel +44 (0) 1942 216161
Fax +44 (0) 1942 213131
www.atguv.com

CLIENT

TITLE

DRAWING No CGA_WF-115-4 Various Dimensions

A

REV	DATE	DESCRIPTION	DRN	CHK	APP
A	04/09/2019	FOR TECHNICAL USE ONLY	T.D.C		

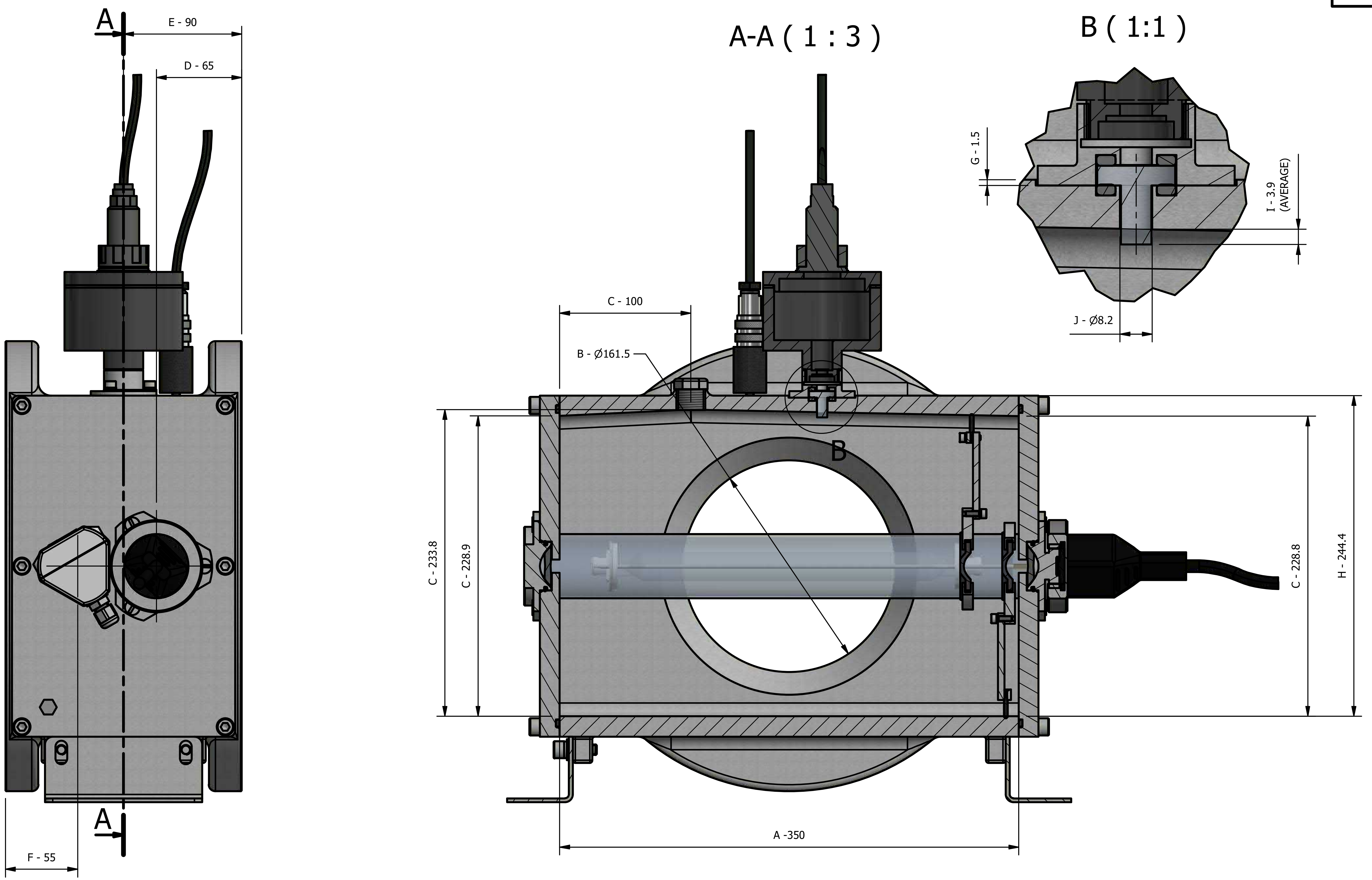

atg UV Technology
LANCASHIRE
ENGLAND
Tel +44 (0) 1942 216161
Fax +44 (0) 1942 213131
www.atguv.com

REV	DATE	DESCRIPTION	DRN	CHK	APP
A	04/09/2019	FOR TECHNICAL USE ONLY	T.D.C		

CLIENT

TITLE

DRAWING No CGA_WF-125-6 Various Dimensions A

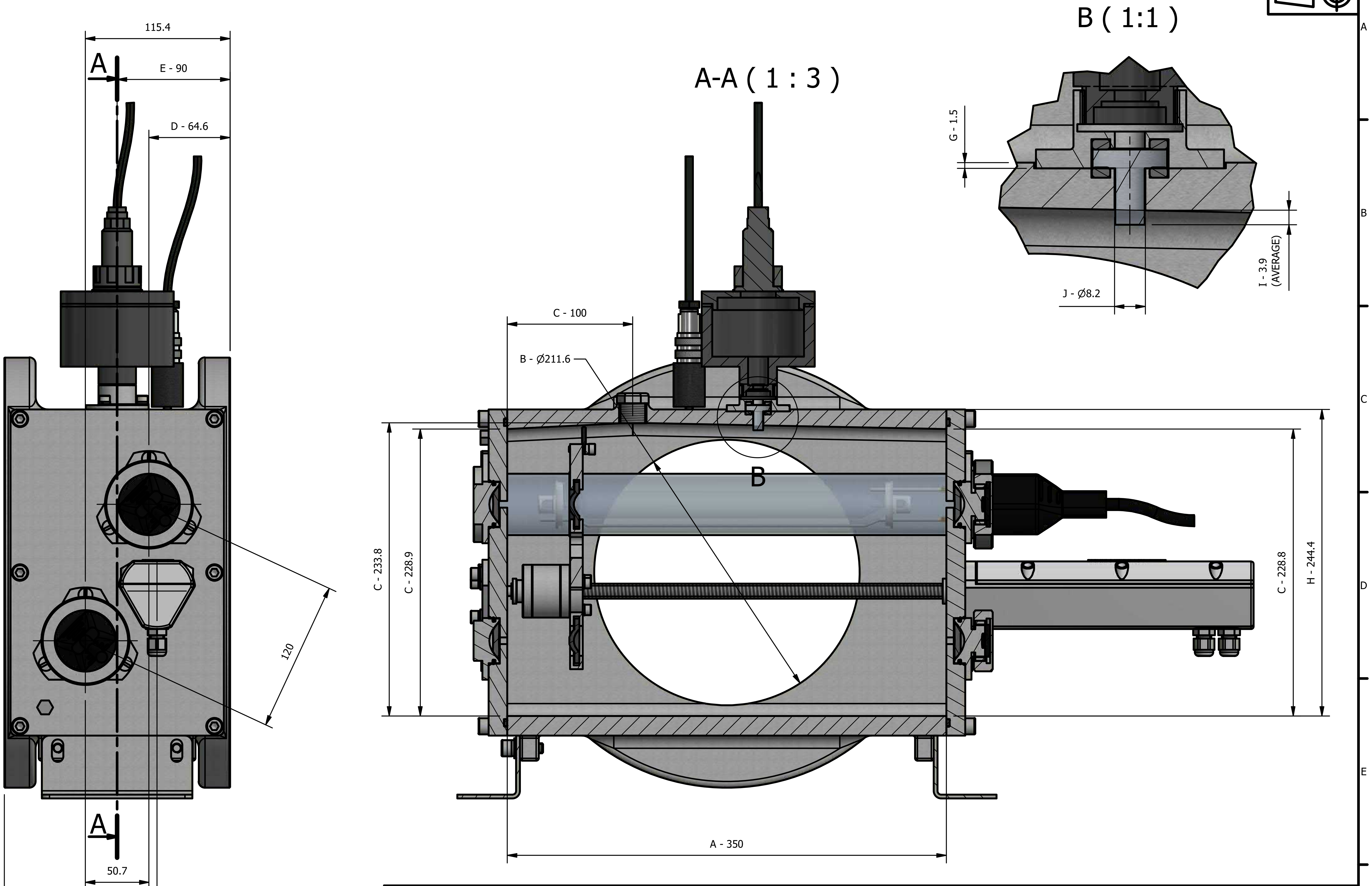

This drawing is the property of atg UV Technology. It is a confidential document and must not be copied, used, or its contents divulged (in whole or part) without prior written consent of the company.

atg
UV Technology

LANCASHIRE
ENGLAND
Tel +44 (0) 1942 216161
Fax +44 (0) 1942 213131
www.atguv.com

CLIENT

TITLE

DRAWING No CGA_WF-225-8 Various Dimensions

A

A	04/09/2019	FOR TECHNICAL USE ONLY	T.D.C		
REV	DATE	DESCRIPTION	DRN	CHK	APP

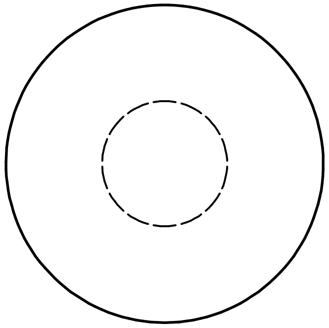

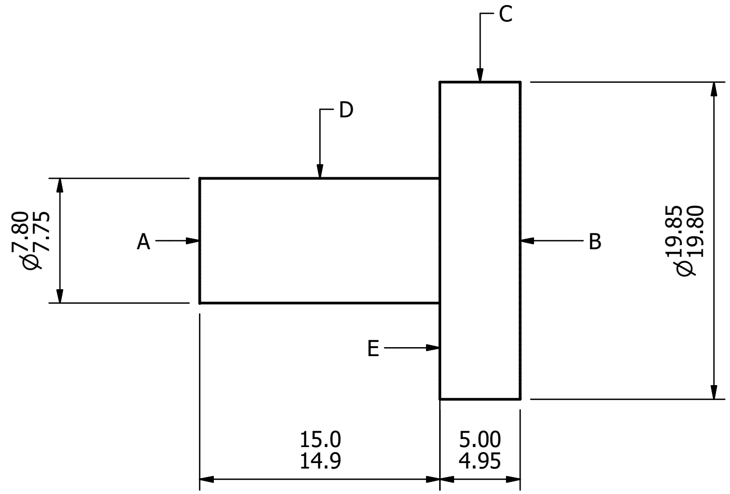

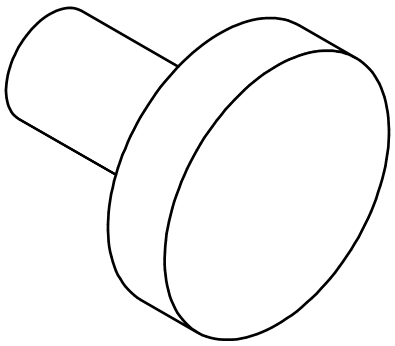

FINISH:
FACE A OPTICALLY POLISHED PGF, USING CEROX 1663
FACE B GROUND TO GIVE 0.3 Ra (+/- 0.1 Ra)
FACES C, D & E GROUND
CLEAN WITH 30% PHOSPHORIC ACID FOR 1 MINUTE AT ATG ONLY

MATERIAL:
SPECTROSIL 2000

TOLERANCES:
DIN ISO 2768 'C'
DIMENSIONS IN mm

atg
UV Technology

LANCASHIRE
ENGLAND
Tel +44 (0) 1942 216161
Fax +44 (0) 1942 213131
www.atguv.com

CLIENT

TITLE
VERIFIED - Quartz Window QWI-20x15x5
(Top Hat)

DRAWING No W2900322

2

REV	DATE	DESCRIPTION	DRN	CHK	APP
2	19/09/2017	MATERIAL AND FINISH CHANGED	T.D.C	G.F	G.F
1	31/01/2017	ISSUED FOR MANUFACTURE	T.D.C	T.D.C	T.D.C

Appendix H

DOSE RESPONSE QA/QC BOUNDS

QA/QC Bounds for MS2, T1UV and T7 Phage

This document provides bounds for the UV dose-response of MS2, T1UV and T7 phage cultured and assayed by GAP Enviromicrobial Services for UV validation at the Portland test Facility.

Methods

UV dose-response data was collected from UV validation reports for three UV vendors. The data spanned a four year period from May 2007 to February 2011. The UV dose-response coefficients used to define the fits to the UV dose-response data were used to predict UV dose for log inactivations from 0 to 6 log in 0.2 log increments. Using data restricted to the validated range of the UV dose-response, the average and standard deviation of the predicted UV dose was calculated at each log inactivation. The 95th and 99.7th percentile predictions intervals for the predicted UV dose were then calculated using:

$$UVdose = \overline{x} \pm t \times SD$$

Where $\overline{x}$ is the average predicted UV dose, SD is the standard deviation of the predicted UV dose, and t is a t-statistic. The upper and lower prediction intervals were then fitted as a function of log inactivation using a polynomial function. Any dose-response fits that fell outside of the 99.7th percentile prediction interval was considered an outlier for defining the average and standard deviation, and hence not included in the analysis. Only one UV dose-response for T7 phage was excluded from the analysis, based on this criteria.

Results

Figures 1, 2, and 3 present the predicted UV dose-response curves for MS2, T1UV and T7 phage, respectively, and the prediction intervals defines as a 95th percentile as defined using the polynomial functions. The 95th percent prediction interval represents the range over which the predicted UV dose-response is expected to occur with 19 out of every 20 measured UV dose response data sets. If the fitted UV dose-response falls within these bounds, there is a high statistical confidence that the fit is valid.

Figures 4, 5, and 6 present the predicted UV dose-response curves for MS2, T1UV and T7 phage, respectively, and the prediction intervals defines as a 99.7th percentile as defined using the polynomial functions. The 99.7th percent prediction interval represents the range over which the predicted UV dose-response is expected to occur with 997 out of every 1000 measured UV dose response data sets. If the fitted UV dose-response falls outside of these bounds, there is a high statistical confidence that the fit is not valid.

UV dose-response fits that fall within the 95th and 99.7th percentile prediction intervals represents a grey area where the fit may or may not be valid. The UV dose response data associated with those fits should inspected to determine if there are reasons for considering the data invalid. For example, if the fit is closer to the 95th percentile prediction interval compared to the 99.7th percentile predictions interval, the confidence that the data is valid is notably higher. Outliers within the measured data set or other factors may be responsible for a fit not being valid.

Because only 10 UV dose-response curves were used to define the T7 phage bounds, the t-statistic was high and the bounds are relatively wide. As more data is collected at the Portland test facility, these bounds shall be updated.

It should be noted that the MS2 UV dose-response is highly repeatable and falls within the bounds for MS2 UV dose-response given by the NWRI UV Guidelines. For a log inactivation of 2 log, the range of UV doses with the 95th percentile prediction interval is ±2.5 mJ/cm^2, or ± 6.4 percent relative to the average dose. In comparison, the range with the NWRI bounds is notably higher at ±10 mJ/cm^2, or ± 23 percent relative to the average dose. The high level of repeatability of the MS2 UV dose-response relative to the NWRI bounds should provide high degree of confidence in the quality of the MS2 phage UV dose-response data obtained from GAP.

The T1UV phage UV dose-response also shows a high degree of repeatability over the four year period considered. For a log inactivation of 2 log, the range of UV doses with the 95th percentile prediction interval is ±0.65 mJ/cm^2, or ± 6.5 percent relative to the average dose. For 2 log inactivation, the absolute variability is less than that with MS2 phage and the relative variability is, for all intents and purposes, the same as MS2 phage. This observation should provide a high degree of confidence in the quality of the T1UV phage UV dose-response data obtained from GAP.

Comparing figures 1, 2 and 3, T7 phage appears to show a higher degree of variability compared to MS2 and T1 phage. For a log inactivation of 2 log, the range of UV doses with the 95th percentile prediction interval is ±0.98 mJ/cm^2, or ± 31 percent relative to the average dose. However, 2 log inactivation with T7 phage corresponds to an average UV dose of 3.18 mJ/cm^2, a relatively low UV dose value typically below the validated range with many UV reactors. At 3 log inactivation, typical of values measured with biodosimetry, the range of UV doses with the 95th percentile prediction interval is ±0.84 mJ/cm^2, or ± 15 percent relative to the average dose. The analysis suggests that the variability with T7 is related to the accuracy measuring low UV doses with the collimated beam apparatus. Nevertheless, the relative variability is still comparable to the relative variability considered acceptable with the NWRI UV Guidelines.

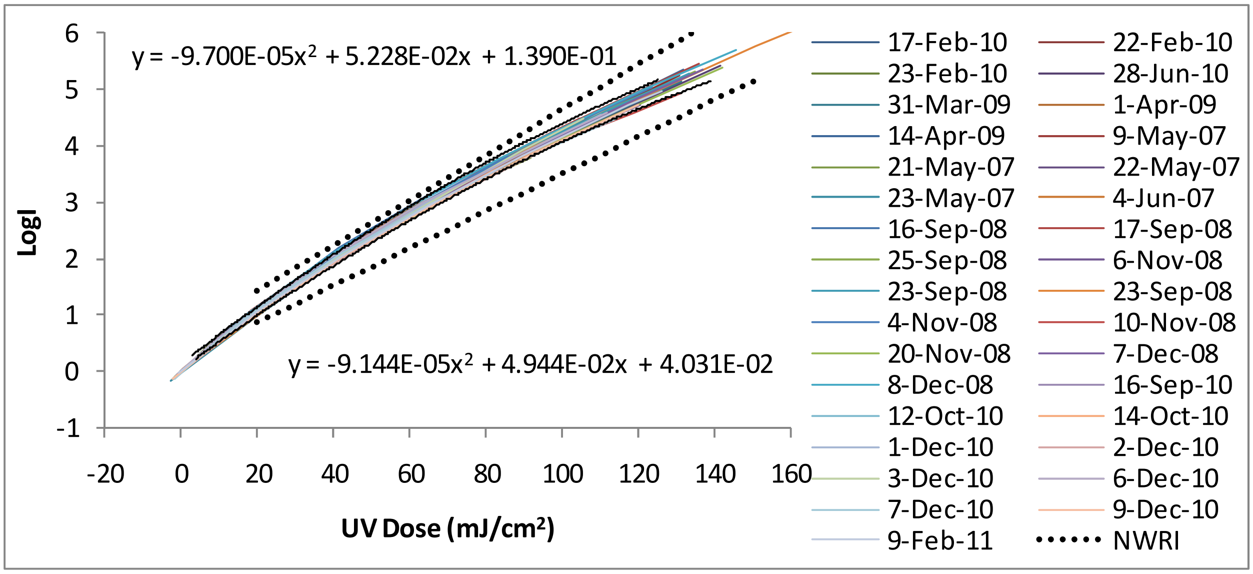

Figure 1. QA/QC Bounds for MS2 phage defined as a 95th percentile prediction interval

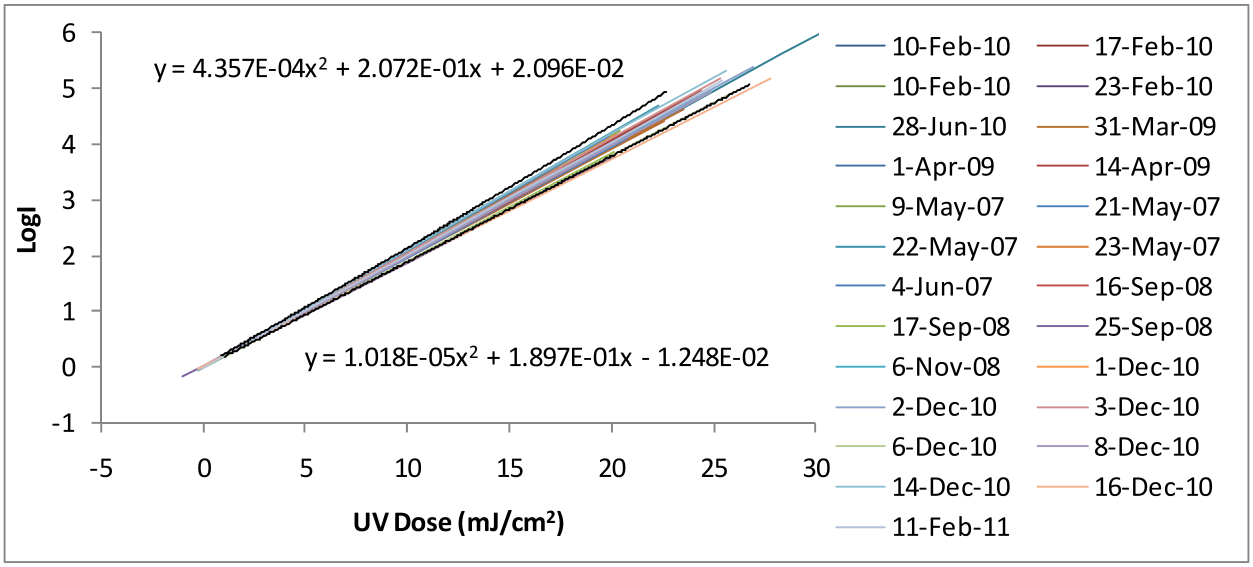

Figure 2. QA/QC Bounds for T1UV phage defined as a 95th percentile prediction interval

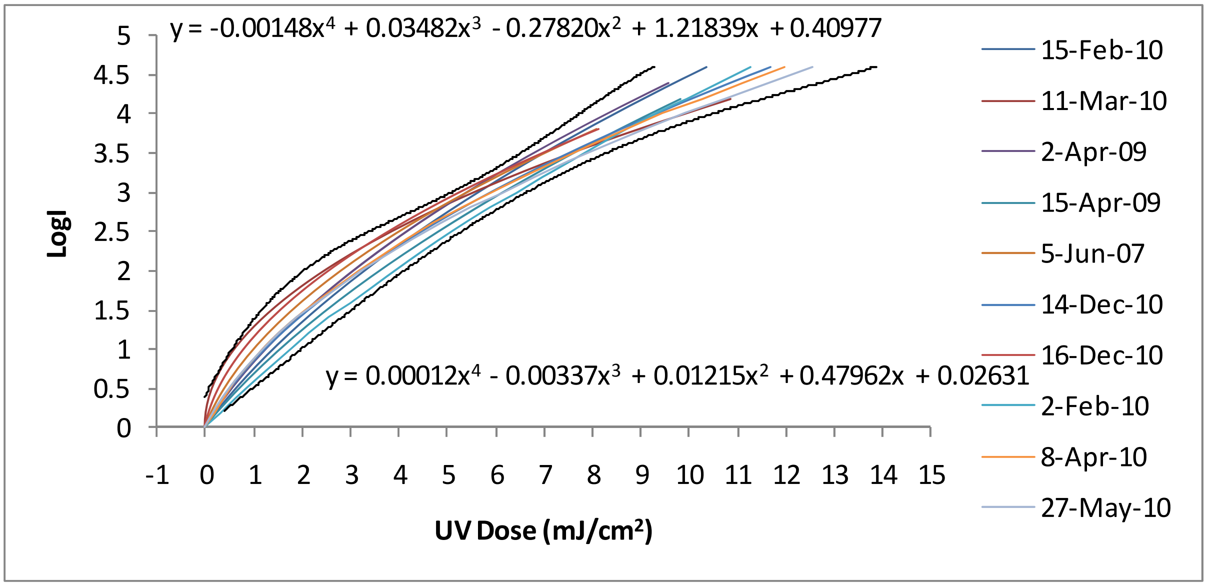

Figure 3. QA/QC Bounds for T7 phage defined as a 95th percentile prediction interval

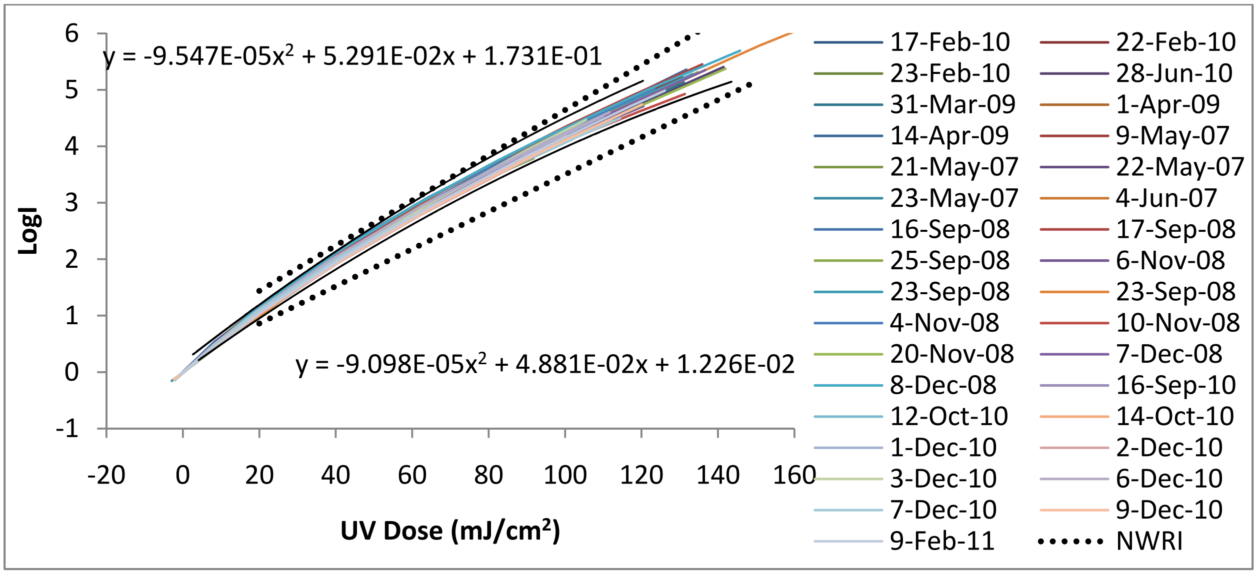

Figure 4. QA/QC Bounds for MS2 phage defined as a 99.7th percentile prediction interval

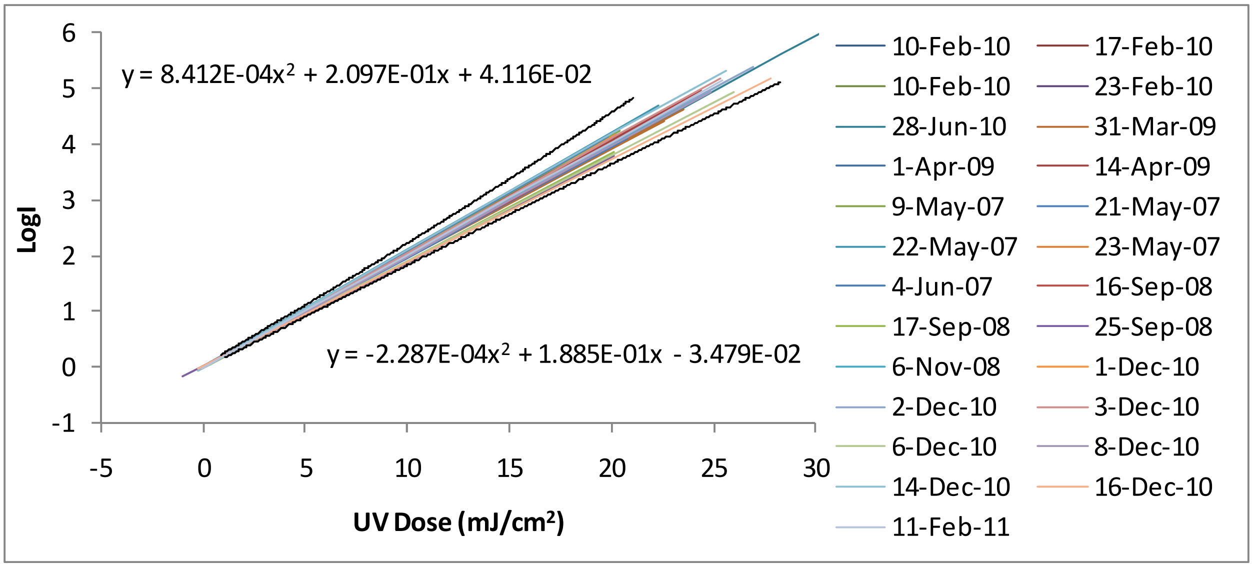

Figure 5. QA/QC Bounds for T1UV phage defined as a 99.7th percentile prediction interval

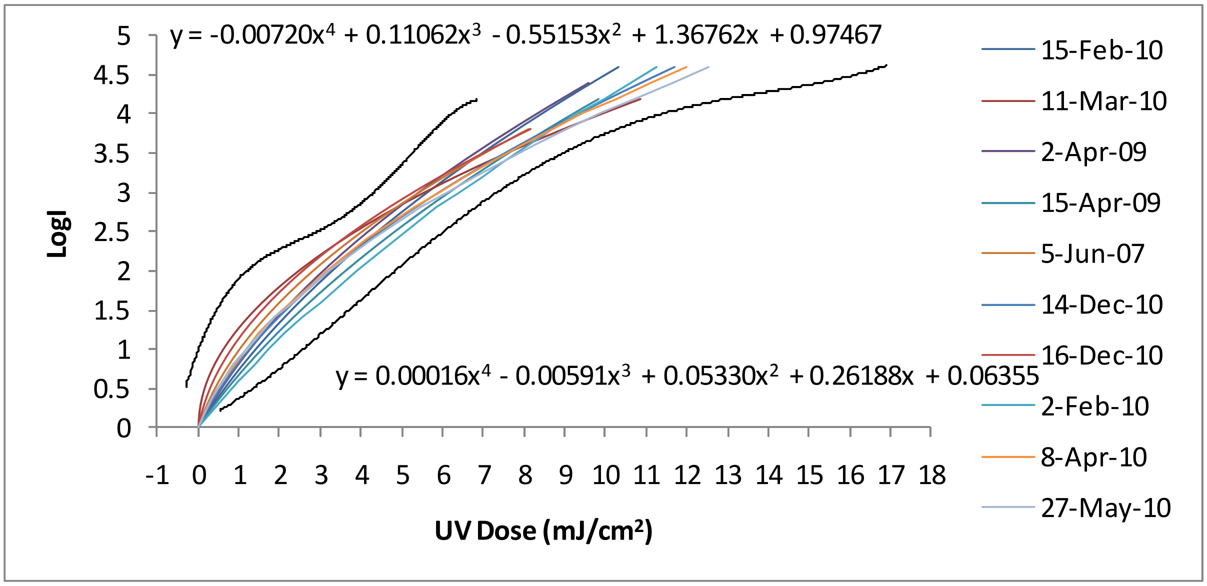

Figure 6. QA/QC Bounds for T7 phage defined as a 99.7th percentile prediction interval

Appendix I

CALCULATING THE UNCERTAINTY OF THE UV DOSE RESPONSE FIT

During UV validation, the UV dose-response of the test microorganisms, measured in the laboratory using a collimated beam apparatus, is fitted using an equation that predicts the UV dose as a function of the log inactivation. That equation is used to relate the log inactivation measured through the UV reactor to a Reduction Equivalent Dose (RED). Appendix C of the UVDGM describes the measurement of the UV dose-response and the analysis used to develop the fit to the UV dose-response data. Section C.4 of the UVDGM states that the uncertainty of the fit to the UV dose-response data, referred to as U_{DR}, should be determined as a 95th percentile confidence interval and incorporated into the validation factor used to define inactivation credit by the UV reactor.

Section C.4 states that the uncertainty of the UV dose-response fit can be conservatively estimated using:

$$U_{DR} = \frac{t \times SD}{D_{CB}} \times 100\%$$

where:

U_{DR} is the uncertainty of the UV dose-response fit,

D_{CB} is the UV dose delivered by the collimated beam,

SD is the standard deviation of the differences between the UV dose values predicted by the equation used to fit the UV dose-response and the UV dose measured with the collimated beam apparatus, and

t is a t-statistic for a 95th percent confidence interval and degrees of freedom defined as the number of measured data points used to define the UV dose-response.

With this conservative approach, the UVDGM states that the uncertainty of the UV dose-response fit should be incorporated into the validation factor if the value exceeds 30 percent.

The UVDGM also states that the uncertainty can be calculated using standard statistical approaches. If these approaches are used, the UVDGM states that the uncertainty of the UV dose-response fit should be incorporated into the validation factor if the value exceeds 15 percent. The UVDGM does not provide an approach for calculating U_{DR} using standard statistical approaches. During the development of the UVDGM, there was concern that including such approaches would make the document too complex for many practitioners.

This document describes an approach for determining the uncertainty of the fit to the UV dose-response using standard statistical approaches. This approach was used with this validation to calculate U_{DR}.

Analysis of UV Dose-Response Data

The UV dose-response of the test microbe is measured using a collimated beam apparatus. The collimated beam apparatus is used to irradiate a fully mixed sample contained within a Petri dish using UV light. Section C.2.4 of the UVDGM provides an equation for calculating the UV dose with each irradiation as:

$$D_{CB} = E_s \times P_f \times (1 - R) \times \frac{L}{d + L} \times \frac{\left(1 - 10^{-A_{254} \times d}\right)}{A_{254} \times d \times ln(10)}$$

where:

E_s is the UV irradiance measured at the sample surface using a radiometer,

P_f is the Petri factor (a factor that accounts for the non-uniformity of the UV intensity across the sample surface),

R is the reflectance of UV light at the air-water interface,

L is the distance from the lamp centerline to the sample surface,

d is the sample depth,

A_{254} is the UV absorbance at 254 nm (Base 10) of the water sample, and

t is the exposure time.

The uncertainty of the calculated UV dose is related to the uncertainty of the equation terms, which include bias and experimental error. The main source of bias error is the accuracy of the radiometer used to measure the UV irradiance. Typically, the radiometer reads high or low and that error impacts the measured UV dose the same amount with each irradiation. The second source of bias error is the accuracy measuring the UVA of the water sample, which also may read high or low. The experimental error is related to the repeatability measuring the suspension depth, exposure time, and UV absorbance. These errors are expected to vary with each exposure.

Following each exposure, the microbial laboratory measures the concentration of the test microbe in the water sample. The results are used to develop a plot of the log concentration (log N) as a function of UV dose. Figure J.1 shows an example of this plot. The relation in Figure J.1 is fitted using a quadratic equation.

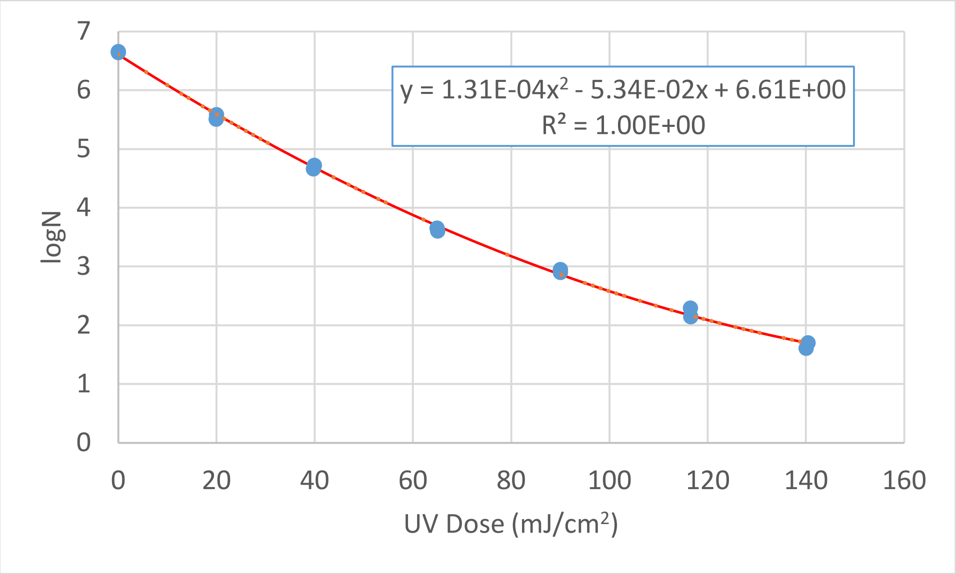

Figure J.1 **Example Plot of Log N vs UV dose**

The UVDGM states that the log inactivation with each irradiation is calculated using:

$$\log I = logN_0 - logN$$

where log N_0 is the log concentration with zero UV dose. The UVDGM recommends determining the value of log N_0 using a fit to the relation between log N and UV dose, For example, with Figure J.1, the value of log N_0 would be 6.61 log. As an alternate, the value of log N_0 can be calculated as the average value measured with replicate measurements of the concentration with zero UV dose. Which approach is better will depend on the quality of the dataset, with the best approach will give the most accurate estimate of log N_0. With this validation, the value of log N_0 is calculated as the average of replicate measurements because the polynomial fit to the UV dose-response data gave biased estimates of log N_0.

Figure J.2 provides the UV dose-response expressed as UV dose as a function of log i. The UVDGM states that the UV dose response data is fitted using a polynomial equation that predicts UV dose as a function of log i using statistically significant terms. Typically, the intercept of the polynomial equation is not significant, and the equation used to fit the data is forced through the origin. The order of the polynomial depends on the shape of the UV dose response. With a linear dose-response, the data is fitted using:

$$\mathrm{D} = A \times logI$$

where A is a constant obtained from regression analysis. However, if the UV dose-response shows curvature, the data may be fitted with a quadratic function:

$$\mathrm{D} = A \times logI + B \times logI^2$$

or a higher order function such as:

$$\mathrm{D} = A \times logI + B \times logI^2 + C \times logI^3$$

where A through C are constants. With the regression analysis, the p-statistics for the constants must be statistically significant (i.e., p-statistic < 0.05). If one or more terms are not statistically significant, the one with the highest p-statistic should be removed from the equation and the analysis repeated until all terms are significant.

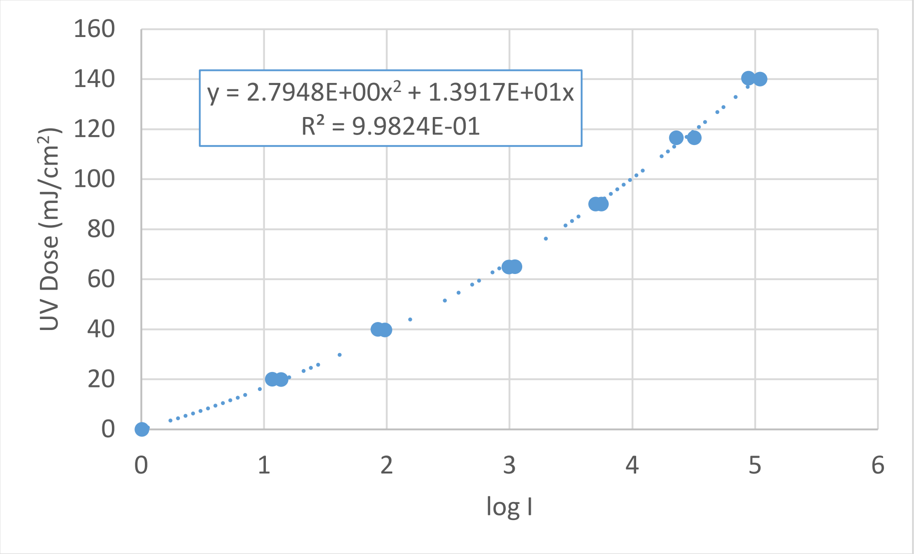

Figure J.2 **UV Dose-Response Expressed as UV Dose versus log i**

Uncertainty of the UV Dose Response Fit

The uncertainty of the UV dose-response fit arises from two sources. Uncertainty occurs because the value of log N_0 is estimated from the UV dose-response data. Any error in the estimate of log N_0 impacts the calculated log inactivation. Second, there is uncertainty occurs because of the regression analysis used to define the fit. The total uncertainty in log units is calculated as:

$$U_{DR} = \sqrt{U_{Zero}^2 + U_{LR}^2}$$

where U_{Zero} is the uncertainty of the UV dose-response caused by the estimate of N_0 and U_{LR} is the uncertainty of the linear regression analysis used to define the fit.

The following sections describe how each of these terms is calculated.

Uncertainty Related to the Estimate of log N_0

If the value of log N_0 is estimated using a fit to the relation of log N as a function of UV dose, the uncertainty of the estimate is calculated using:

$$U_{logN0} = \frac{t \times SE}{\sqrt{n}}$$

where

SE is the standard error of the fit of log N as a function of UV dose,

t is a t-statistic for a 95th percent confidence interval and degrees of freedom equal to n-p-1 where n the number of measured data points used to define the UV dose-response and p is the number of constants determined using the regression analysis.

If the value of log N_0 is estimated as the average of replicate measurements of the log concentration with zero dose, the uncertainty of the estimate is calculated using:

$$U_{logN0} = \frac{t \times SD}{\sqrt{n}}$$

where

SD is the standard deviation of the replicate measurements of log N_0,

t is a t-statistic for a 95th percent confidence interval and degrees of freedom equal to n-1,

n is the number of data replicate measurements used to calculate the average.

With this work, log N_0 was estimated as the average of the six replicate measurements with zero dose (i.e., n= 6).

The impact of the uncertainty of log N_0 on the UV dose-response is estimated using the following steps:

1. Fit the relation between log N and UV dose.
2. Use the fit from Step 1 to predict the log N at each measured UV dose.
3. Calculate log N_0, either using the fit from Step 1 or as the average of the replicate measurements of log N with zero dose.
4. Calculate the uncertainty of log N_0.
5. For each irradiation, calculate log i using the log N_0 value from Step 3 minus the measured value of log N.
6. Fit the relation of UV dose versus log i from Step 5.
7. Define a new value of log N_0 as the value from Step 3 minus the uncertainty from Step 4.
8. For each irradiation, calculate the log i as the log N_0 value from Step 7 minus the log N predicted using the equation from Step 2.
9. Fit the relation of UV dose versus log i from Step 8.
10. For a given log i of interest, the uncertainty in the predicted UV dose is defined as the difference in the UV dose values predicted for that log i using the equations developed from Steps 6 and 9.

Example Calculation.

Table J.1 gives a UV dose-response data set. The irradiations were done in duplicate and each irradiated sample was assayed in triplicate. Log N_0 was calculated using the 6 replicate counts at zero UV dose as 6.6468 log. The uncertainty of log N_0 for a 95th percent confidence interval was calculated as ± 0.0418 log.

Column 5 of Table J.1 gives the log N calculated as the average of the measured counts for each UV dose. Column 6 gives the log N predicted using the fit of the measured log N versus UV dose.

Column 7 gives the log inactivation calculated using the measured log N values and log N_0 set to 6.6468 log.

Column 8 gives the log inactivation calculated using the predicted values from Step 5 and log N_0 set to 6.6468 - 0.0418 = 6.6065 log.

Table J.1 Example UV Dose-Response Data and Analysis

1	2	3	4	5	6	7	8
UV Dose	**Counts_a**	**Counts_b**	**Counts_c**	**log N**	**Pred log N**	**log i**	**log i'**

					Step 2	Step 5	Step 8
0.00	5050000.0	4350000.0	4150000.0	6.65	-	-0.0065	0.0000
19.96	360000.0	365000.0	245000.0	5.51	5.6151	1.1387	0.9913
39.75	44000.0	46500.0	47500.0	4.66	4.6990	1.9856	1.9075
64.88	6050.0	4000.0	3500.0	3.65	3.6903	2.9935	2.9161
90.03	870.0	980.0	810.0	2.95	2.8549	3.7006	3.7515
116.55	131.0	151.0	136.0	2.14	2.1621	4.5043	4.4443
140.07	38.0	47.0	36.5	1.61	1.7094	5.0409	4.8970
0.00	4150000.0	4900000.0	4100000.0	6.64	-	0.0065	0.0000
20.04	385000.0	385000.0	375000.0	5.58	5.6113	1.0666	0.9952
39.91	55500.0	52500.0	49500.0	4.72	4.6917	1.9282	1.9148
65.06	4250.0	4000.0	3800.0	3.60	3.6839	3.0444	2.9226
90.02	1000.0	710.0	670.0	2.90	2.8551	3.7489	3.7514
116.52	223.0	180.0	182.0	2.29	2.1627	4.3583	4.4437
140.41	55.0	47.0	49.0	1.70	1.7039	4.9465	4.9025

The fit of UV dose versus log inactivation from column 6 gives:

$$UV\ dose = 13.917 \times \log I + 2.7948 \times \log I^2$$

The fit of UV dose versus log inactivation from column 8 gives:

$$UV\ dose = 14.603 \times \log I + 2.7202 \times \log I^2$$

The difference between the UV dose values predicted by these two equations represents the uncertainty of the UV dose-response caused by the estimate of log N_0 (i.e., U_{zero})

Uncertainty Related to the Linear Regression Analysis

With linear regression, a dataset is fitted using:

$$y = \beta_1 + \beta_2 \times x$$

where β_1 and β_2 are the constants. If the dataset consists of n values of x, the linear regression analysis can be expressed using matrix math as:

$$\begin{bmatrix} y_1 \\ y_2 \\ . \\ . \\ . \\ y_n \end{bmatrix} = \begin{bmatrix} 1 & x_1 \\ 1 & x_2 \\ & . \\ & . \\ & . \\ 1 & x_n \end{bmatrix} \times \begin{bmatrix} \beta_1 \\ \beta_2 \end{bmatrix} + \begin{bmatrix} \epsilon_1 \\ \epsilon_2 \\ . \\ . \\ . \\ \epsilon_N \end{bmatrix}$$

or

$$\boldsymbol{Y} = \boldsymbol{X\beta} + \boldsymbol{\varepsilon}$$

where

y_1 to y_n are the y-values,

x_1 to x_n are the x-values,

ε_1 to ε_n are the difference between the measured and predicted y-values,

Y is a matrix representing the y-values

X is a matrix representing the x-values

β is a matrix representing the constants, and

ε is a matrix representing the differences

If the equation is forced through zero, the matrix math is expressed as:

$$\begin{bmatrix} y_1 \\ y_2 \\ \cdot \\ \cdot \\ \cdot \\ y_n \end{bmatrix} = \begin{bmatrix} x_1 \\ x_2 \\ \cdot \\ \cdot \\ \cdot \\ x_n \end{bmatrix} \times [\beta_1] + \begin{bmatrix} \epsilon_1 \\ \epsilon_2 \\ \cdot \\ \cdot \\ \cdot \\ \epsilon_N \end{bmatrix}$$

With quadratic regression, a dataset is fitted using:

$$y = \beta_1 + \beta_2 \times x + \beta_3 \times x^2$$

where β_1, β_2 and β_3 are the constants. If the dataset consists of n values of x and y, the linear regression analysis can be expressed using matrix math as:

$$\begin{bmatrix} y_1 \\ y_2 \\ \cdot \\ \cdot \\ \cdot \\ y_n \end{bmatrix} = \begin{bmatrix} 1 & x_1 & x_1^2 \\ 1 & x_2 & x_2^2 \\ & \cdot & \\ & \cdot & \\ & \cdot & \\ 1 & x_n & x_n^2 \end{bmatrix} \times \begin{bmatrix} \beta_1 \\ \beta_2 \\ \beta_3 \end{bmatrix} + \begin{bmatrix} \epsilon_1 \\ \epsilon_2 \\ \cdot \\ \cdot \\ \cdot \\ \epsilon_N \end{bmatrix}$$

which can also be expressed as:

$$\boldsymbol{Y} = \boldsymbol{X\beta} + \boldsymbol{\varepsilon}$$

If the quadratic equation is forced through zero, the matrix math is expressed as:

$$\begin{bmatrix} y_1 \\ y_2 \\ \cdot \\ \cdot \\ \cdot \\ y_n \end{bmatrix} = \begin{bmatrix} x_1 & x_1^2 \\ x_2 & x_2^2 \\ \cdot & \\ \cdot & \\ \cdot & \\ x_n & x_n^2 \end{bmatrix} \times \begin{bmatrix} \beta_2 \\ \beta_3 \end{bmatrix} + \begin{bmatrix} \epsilon_1 \\ \epsilon_2 \\ \cdot \\ \cdot \\ \cdot \\ \epsilon_N \end{bmatrix}$$

In a likewise fashion, with a third order polynomial regression, a dataset is fitted using:

$$y = \beta_1 + \beta_2 \times x + \beta_3 \times x^2 + \beta_4 \times x^3$$

where β_1, β_2 and β_3 are the constants. If the dataset consists of n values of x and y, the linear regression analysis can be expressed using matrix math as:

$$\begin{bmatrix} y_1 \\ y_2 \\ \cdot \\ \cdot \\ \cdot \\ y_n \end{bmatrix} = \begin{bmatrix} 1 & x_1 & x_1^2 & x_1^3 \\ 1 & x_2 & x_2^2 & x_2^3 \\ & & \cdot & \\ & & \cdot & \\ & & \cdot & \\ 1 & x_n & x_n^2 & x_n^3 \end{bmatrix} \times \begin{bmatrix} \beta_1 \\ \beta_2 \\ \beta_3 \\ \beta_4 \end{bmatrix} + \begin{bmatrix} \epsilon_1 \\ \epsilon_2 \\ \cdot \\ \cdot \\ \cdot \\ \epsilon_N \end{bmatrix}$$

If the third order polynomial equation is forced through zero, the matrix math is expressed as:

$$\begin{bmatrix} y_1 \\ y_2 \\ \cdot \\ \cdot \\ \cdot \\ y_n \end{bmatrix} = \begin{bmatrix} x_1 & x_1^2 & x_1^3 \\ x_2 & x_2^2 & x_2^3 \\ & \cdot & \\ & \cdot & \\ & \cdot & \\ x_n & x_n^2 & x_n^3 \end{bmatrix} \times \begin{bmatrix} \beta_2 \\ \beta_3 \\ \beta_4 \end{bmatrix} + \begin{bmatrix} \epsilon_1 \\ \epsilon_2 \\ \cdot \\ \cdot \\ \cdot \\ \epsilon_N \end{bmatrix}$$

With UV dose response data shown in Figure J.1, the data is fit using:

$$logN = A + B \times D + C \times D^2$$

where A, B, and C are constants. In this case, matrix **Y** is composed of the measured values of log N, the matrix **X** is composed of the measured values of UV dose and UV dose squared, and the matrix **β** is composed of the constants A, B, and C.

With the UV dose-response shown in Figure J.2, the data is fit using:

$$D = A \times logI + B \times logI^2$$

where A and B are constants. In this case, matrix **Y** is composed of the measured values of UV dose, the matrix **X** is composed of the measured values of log i and log i squared, and the matrix **β** is composed of the constants A and B.

According to Draper and Smith (183), the confidence interval for the predicted value with a multivariate linear equation fitted to a dataset is calculated using:

$$CI_{Fit} = t \times \sqrt{\boldsymbol{X_0'}(\boldsymbol{X'X})^{-1}\boldsymbol{X_0}} \times \sqrt{\frac{\boldsymbol{Y'Y} - \boldsymbol{Y'X}(\boldsymbol{X'X})^{-1}\boldsymbol{X'Y}}{n - p - 1}}$$

where:

Y is a matrix representing the y-values,

Y' is the transpose of matrix **Y**,

Y'Y is the matrix multiplication of **Y'** and **Y**,

X is a matrix representing the x-values,

X' is the transpose of matrix **X**,

(X'X)$^{-1}$ is the inverse matrix of the matrix multiplication of **X'** and **X**, n is the number of data points with the dataset,

p is the number of constants with the equation, and

t is a t-statistic for a 95th percent confidence defined for n-p-1 degrees of freedom.

Furthermore, $\mathbf{X_0}$ is a matrix representing the X values for which the confidence interval is being determined, and $\mathbf{X_0}'$ would be defined as the transform of matrix $\mathbf{X_0}$. With the data in Figure J.1 fitted using a quadratic equation, the matrix $\mathbf{X_0}$ at a UV dose of 20 mJ/cm^2 would be defined as:

$$\boldsymbol{X_0} = [1 \ \ x \ \ x^2] = [1 \ \ 20 \ \ 400]$$

With the data in Figure J.2 fitted using a quadratic equation forced through zero, the matrix $\mathbf{X_0}$ at a log inactivation of 3 log would be defined as:

$$\boldsymbol{X_0} = [x \ \ x^2] = [3 \ \ 9]$$

If the data in Figure J.2 was fit using a 3rd order polynomial forced through zero, the matrix $\mathbf{X_0}$ at a log inactivation of 3 log would be defined as:

$$\boldsymbol{X_0} = [x \ \ x^2 \ \ x^3] = [3 \ \ 9 \ \ 27]$$

Example Calculation

With Table J.1, the matrices **X** and **Y** are defined respectively as:

$$\begin{array}{c} 0.00 \\ \begin{bmatrix} 19.96 \\ 39.75 \\ 64.88 \\ 90.03 \\ 116.55 \\ 140.07 \\ 0 \\ 20.04 \\ 39.91 \\ 65.06 \\ 90.02 \\ 116.52 \\ 140.41 \end{bmatrix} \end{array} \quad \text{and} \quad \begin{array}{cc} -0.0065 & 0.0000 \end{array} \atop \begin{bmatrix} 1.1387 & 1.2965 \\ 1.9856 & 3.9424 \\ 2.9935 & 8.9610 \\ 3.7006 & 13.694 \\ 4.5043 & 20.288 \\ 5.0409 & 25.410 \\ 0.0065 & 0.0000 \\ 1.0666 & 1.1377 \\ 1.9282 & 3.7178 \\ 3.0444 & 9.2686 \\ 3.7489 & 14.054 \\ 4.3583 & 18.995 \\ 4.9465 & 24.467 \end{bmatrix}$$

The matrix math was done using functions within Microsoft Excel.

The term $\sqrt{\frac{\boldsymbol{Y'Y} - \boldsymbol{Y'X}(\boldsymbol{X'X})^{-1}\boldsymbol{X'Y}}{n-p-1}}$ represents the standard error of the fit and has a value of 0.03672.

For each UV dose, Table J.2 tabulated the uncertainty related to the estimate of log N$_0$, the uncertainty related to the linear regression analysis, and the uncertainty of the UV dose response. Figure J.3 shows a plot of the uncertainties in units of mJ/cm^2 expressed as a function of log inactivation. Figure J.4 shows the total uncertainty in units of percent expressed as a function of log inactivation.

Table J.2 Example UV Dose-Response Uncertainty

log i	UV Dose (mJ/cm^2)	Uncertainty Related to log N_0 (mJ/cm^2)	Uncertainty Related to Regression (mJ/cm^2)	Total Uncertainty, U_{DR} (mJ/cm^2)	Total Uncertainty, U_{DR} (%)
0.10	1.42	0.06793	0.1819	0.19417	13.6777
0.15	2.15	0.10133	0.26964	0.28805	13.3952
0.20	2.90	0.13437	0.35523	0.3798	13.1184
0.30	4.43	0.19931	0.52002	0.5569	12.581
0.40	6.01	0.26276	0.67627	0.72552	12.0642
0.51	7.87	0.33267	0.84259	0.90589	11.5037
0.60	9.36	0.38519	0.96327	1.03743	11.0882
0.70	11.11	0.44416	1.09407	1.18079	10.6271
0.80	12.92	0.50164	1.21644	1.31581	10.1827
1.00	16.71	0.61213	1.43601	1.56104	9.34112
1.25	21.76	0.74184	1.66373	1.82163	8.37041
1.50	27.16	0.86222	1.84024	2.03222	7.48149
2.00	39.01	1.075	2.04438	2.30979	5.92064
3.00	66.90	1.38862	1.93227	2.37948	3.55661
4.00	100.38	1.55299	1.6592	2.2726	2.26392

Figure J.3 Uncertainty of the UV Dose Response in Units of mJ/cm^2. The UV dose-response was modeled using a quadratic equation forced through zero.

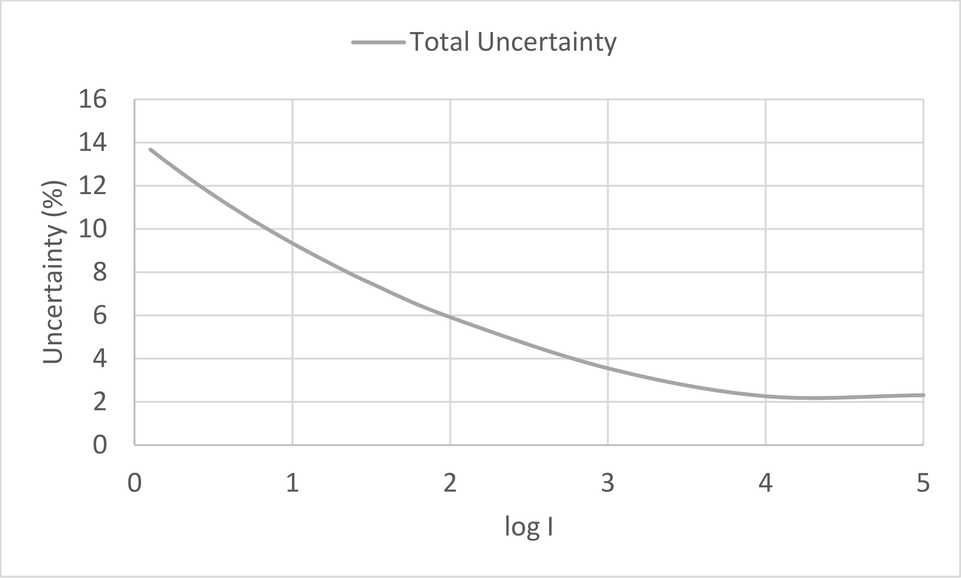

Figure J.4 **Uncertainty of the UV Dose Response as a Percentage of the UV Dose. The UV dose response was modeled using a quadratic equation forced through zero.**

Comparison of UDR with Linear and Quadratic UV Dose-Response

For a linear UV dose-response curve, Figure J.5 shows the uncertainty related to the estimate of log N_0, the uncertainty related to the linear regression analysis, and the uncertainty of the UV dose response. Figure J.6 shows the total uncertainty in units of percent expressed as a function of log inactivation.

Comparing Figures J.5 and J.6 to Figures J.3 and J.4, it is apparent that the uncertainty depends on the function used to fit the dose-response data. With a linear function forced through zero, the uncertainty in units of mJ/cm^2 increases linearly with log inactivation and is a fixed percentage of the UV dose. In contrast, with a quadratic function forced through zero, the uncertainty in units of mJ/cm^2 shows a non-linear increase with log inactivation, and the uncertainty as a percentage of UV dose decrease in value to a minimum beyond which it increases as log inactivation increases. However, with all of these calculations, the uncertainty at zero log inactivation is zero.

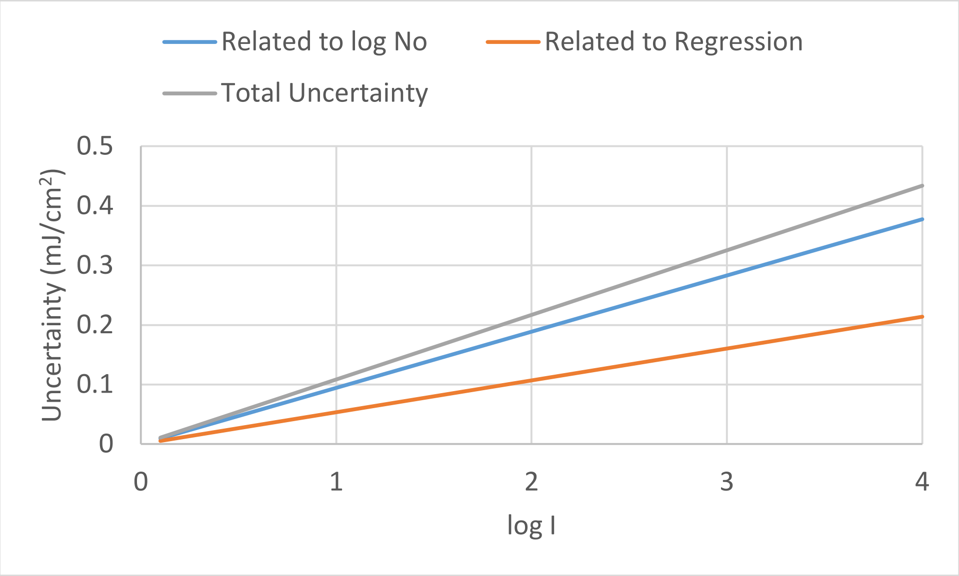

Figure J.5 **Uncertainty of the UV Dose Response in Units of mJ/cm^2. The UV dose-response was modeled using a linear equation forced through zero.**

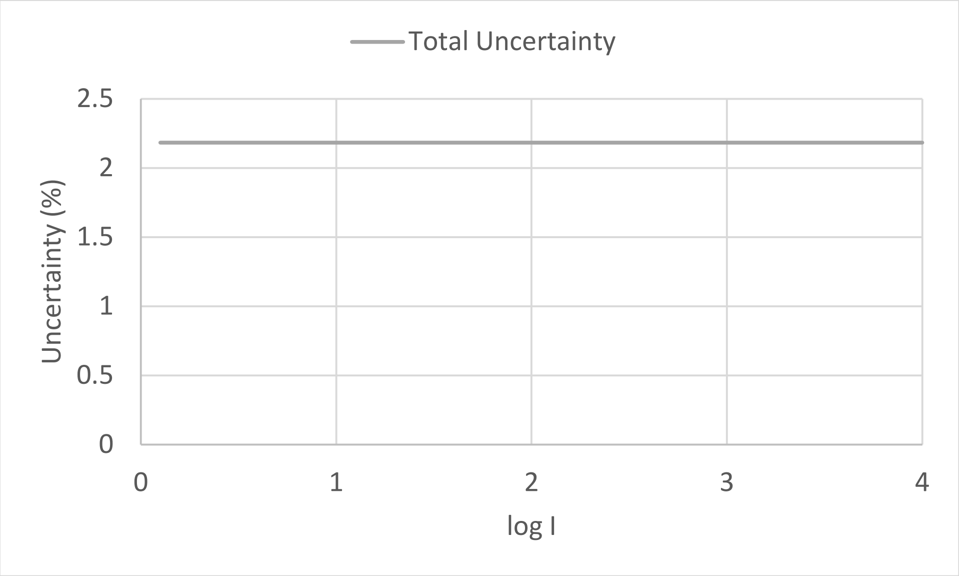

Figure J.6 **Uncertainty of the UV Dose Response as a Percentage of the UV Dose. The UV dose-response was modeled using a linear equation forced through zero.**

Proof of Concept

A Monte Carlo simulation was used to simulate the measurement of 563 UV dose response curves. The simulation assumed a true UV dose-response of:

$$\log N = 6.483 - 0.05451 \times D + 0.000137 \times D^2$$

This UV dose-response represents the fitted dose response using the data from the example above. The simulation assumed the measured values logN are normally distributed about the true value of log N. The simulation used standard deviation of 0.041857 log for the simulated value of logN at zero UV dose and a standard deviation of 0.073478, values that matched the standard deviation of the replicates at zero dose and the standard error of the fit to the data given in the example. Figure J.7 shows five of the 563 simulated U dose-response curves.

Each simulated dose-response curve was analyzed to develop an equation predicting UV dose as a function of log i. The equations were used to predict UV dose values at various log inactivation ranging from 0 to 5 log. At each log inactivation, the average and standard deviation of the UV dose values was calculated. The standard deviation was used to calculate a 95th percentile predictions interval, which in turn was used to estimate the value of U_{DR} as a percentage of the UV dose. Figure J.8 compares the UDR calculated using the Monte Carlo simulation to that determined for the example above using the equations given in this document. As shown, the equations presented in this document predict the UDR determined using the Monte Carlo approach within 1 percent, providing an independent validation of these equations.

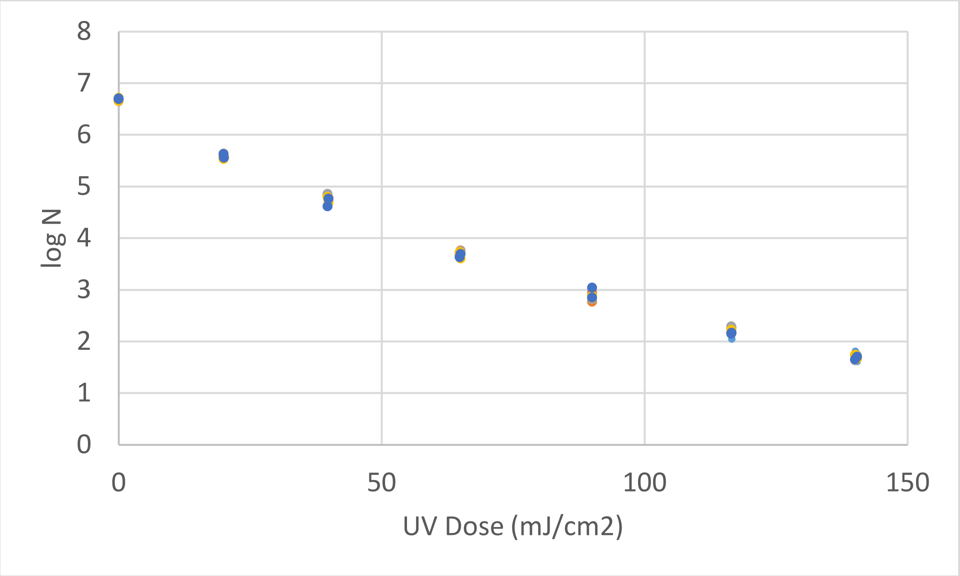

Figure J.7 **Monte Carlo Simulation of UV Dose-Response Data**

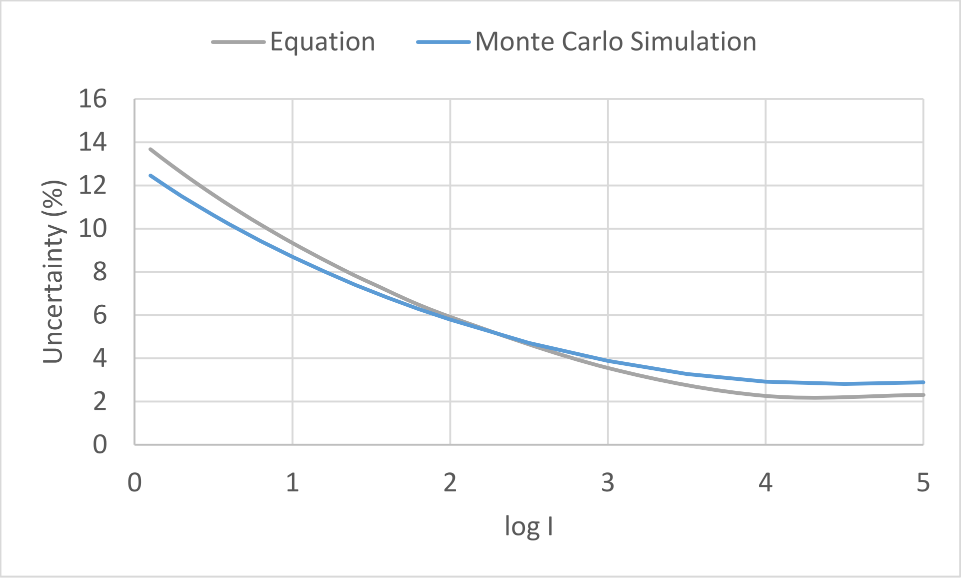

Figure J.8 Comparison of U_{DR} for the Example UV Dose Response Calculated Using the Equations Given in this Document to Values Determined Using Monte Carlo Simulation.

APPENDIX XI

SUMMIT CLUB **Date: August 2022**
NORTH CASTLE, NEW YORK

CALCULATION OF SODIUM HYPOCHLORITE INJECTION RATES FOR WELL 1, WELL 3 AND WELL 6A

Calculated by: Michael Shortell
Reviewed by: Steve Rupar

PROBLEM STATEMENT

Calculate the sodium hypochlorite injection rates and the metering pump settings.

GENERAL EQUATION

$C_{cl2} \text{ x } V_{cl2} + C_{dil} \text{ x } V_{dil} = C_{crock} \text{ x } V_{crock}$

where

Ccl2 = sodium hypochlorite base product concentration (12.5%)
Vcl2 = volume of sodium hypochlorite (12.5%)
Cdil = dilution water sodium hypochlorite concentration
Vdil = volume of dilution water
C crock = sodium hypochlorite solution concentration in day tank
V crock = volume of sodium hypochlorite solution in day tank

$$\text{metering pump feed rate} = \frac{\text{Well Pump Output x Dosage x 1,440 x Treated Water Concentration}}{\text{Solution Strength - Treated Water Concentration}}$$

ASSUMPTIONS

1. A diluted 12.5% sodium hypochlorite source product will be used for disinfection.
2. The proposed chlorine dosage at the compliance sampling point in the system will be 1.0 mg/l.
3. The calculation is based on the peak well pump rate from Well 1, Well 3 and Well 6A being 50 gpm, 50 gpm and 65 gpm, respectively.
5. A 55-gallon chemical solution tank will be used to store the sodium hypochlorite solution.
6. The metering pumps are equipped with an adjustable dial that ranges from 0 to 10 with each incremental setting equating to 10% of the output.

CALCULATION

Ccl2 =	125000	mg/l
Cdil =	1.00	mg/l
Vcl2 =	10	gal
Vdil =	44	gal
V crock =	54	gal
C crock =	23149	mg/l
Sodium hypochlorite solution strength in day tank =	2.31	%

Well	Well Pump Output (gpm)	TTWC (mg/l)	Solution Strength (%)	Metering Pump Feed Rate	
				gpd	gph
Well 1	50	1	2.31	3.1104	0.1296
Well 3	50	1	2.31	3.1104	0.1296
Well 6A	65	1	2.31	4.0436	0.1685

TTWC: Target treated water concentration

Metering Pump ID	Maximum Metering Pump Output (GPD)	Pump Setting	Output (gpd)	Output (gph)
Well 1	5	6.22	3.1104	0.1296
Well 3	5	6.22	3.1104	0.1296
Well 6A	10	4.04	4.0436	0.1685

CONCLUSION

A 2.31% sodium hypochlorite solution will be injected at a rate of approximately 6.2 gpd, 6.2 gpd and 4.0 gpd for Well 1, Well 3 and Well 6A, respectively. The metering pump controls for Well 1, Well 3 and Well 6A will be set at 3.1, 3.1 and 5.0, respectively.

APPENDIX XII

DURA-BLUE®

NATIONAL PIPE & PLASTICS, INC.
American-made products since 1970

Corporate Offices
3421 Old Vestal Road, Vestal, NY 13850
800.836.4350 607.729.9381 Fax: 607.729.6130
www.nationalpipe.com

PVC MUNICIPAL WATER TRANSMISSION PIPE

Scope: This submittal designates the general requirements for **Unplasticized Polyvinyl Chloride Municipal Water Pipe from compound with a cell classification 12454, as defined in ASTM Standard D-1784.**
Pipe: All pipe shall meet the requirements of **AWWA C-905 Standard**, for potable water transmission mains and for fire protection systems. Our pipe meets National Sanitation Foundation Standard #61 for plastic piping system components and related materials. The gasketed joint shall meet the requirements of ASTM D-3139, and the joint gasket shall conform to ASTM F-477. Pipe shall be furnished in laying lengths of 20’ (+/- 1”). Other lengths may be available upon request.

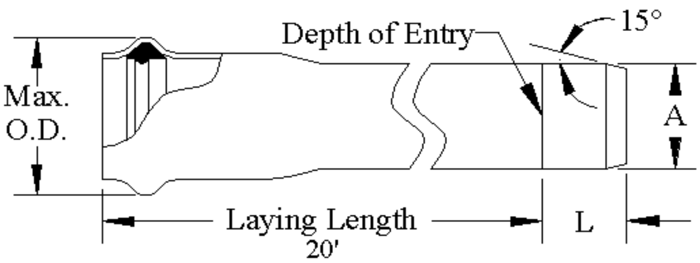

This product is manufactured in alternative colors for specific applications. **Purple** for Reclaimed Water application. Print legend will include the marking “Reclaimed Water”. **Green** for Sanitary Sewer Force Main applications. Print legend will include “Force Main”. Although manufactured in accordance with the same industrial standards and testing requirements, these products do not bear the NSF or CSA Listing Mark as they are used for different applications.

C-905 Water Pipe Size and Dimensions

Nominal Size (in.)	Metric (m.m.)	Dimension Ratio (DR)	Pressure Rating (PSI)	“A” Average (O.D.) Outside Diameter	Minimum Wall	Max. O.D. Reference	“L” Dimension Reference
14	350	25	165	15.300	.612	18.750	8.750
		21	200		.729		
		18 **	235		.850		
16	400	25 *	165	17.400	.696	21.000	10.000
		21	200		.829		
		18 * **	235		.967		
18	450	25	165	19.500	.780	24.000	10.750
		21	200		.929		
		18	235		1.083		
20	500	25	165	21.600	.864	26.000	10.500
		18	235		1.200		
24	600	32.5	125	25.800	0.794	31.000	12.000
		25	165		1.032		
		18	235		1.433		

* CSA Certified.

** BNQ Certified.

SUMMIT CLUB **Date: August 2022**
NORTH CASTLE, NEW YORK

CALCULATION OF THE CONTACT TIME FOR WELL 1, WELL 3 AND WELL 6A

Calculated by: Michael Shortell
Reviewed by: Steve Rupar

PROBLEM STATEMENT

Calculate the CT of the water supply system needed to provide 4-log inactivation of viruses.

GENERAL EQUATION

$$T = \frac{(0.785\ d^2) \times (L) \times (7.48)}{Q}$$

where

T = contact time (minutes)
d = pipe diameter (feet)
L = length of pipe (feet)
Q = maximum expected flow (gpm)
CT = free chlorine residual (mg/l) x T (min)

ASSUMPTIONS

1. The maximum pH of the groundwater from Well 1 is 7.5.
2. The Groundwater Rule requires a CT of approximately 8 mg-min/l at 5 degrees Celsius for inactivation of viruses.
3. The maximum design flow (peak well pump output) for Well 1, Well 3 and Well 6A is 165 gpm (Well 1: 50 gpm, Well 3: 50 gpm and Well 6A: 65 gpm).
4. The baffling factor for pipe flow (plug flow) is 1.0.
5. The inner diameter of the 24-inch diameter C905 pipe is 25.80 inches (2.15 ft).
6. The minimum free residual chlorine concentration at the compliance point is 0.60 mg/l.

CALCULATION

Baffling Factor =	1	
Length of 24-inch diameter contact pipe =	82	feet
Diameter of contact pipe =	2.15	feet
Peak Flow =	165	gpm
Minimum free chlorine residual at Compliance Point =	0.6	mg/l

T =	13.49	minutes
CT =	8.09	mg min/l

CONCLUSION

Using 82 feet of 24-inch C905 PVC pipe with a minimum residual chlorine concentration of 0.60 mg/l will result in the CT for the water supply system being 8.09 mg-min/L, which exceeds the 8 mg-min/L requirement.

APPENDIX XIII

SUMMIT CLUB **Date: August 2022**
NORTH CASTLE, NEW YORK

CALCULATION OF TOTAL DYNAMIC HEAD - TRANSFER PUMPS (FIRE)

Calculated by: Michael Shortell
Reviewed by: Stephen Rupar

PROBLEM STATEMENT

Calculate the total dynamic head from the transfer pumps to the furthest point in the distribution system.

PROCESS DESCRIPTION

The headloss for the transfer pumps is determined by summing the losses associated with the piping losses and lift between the transfer pumps in the proposed treatment building to furthest point in the distribution system. The design pumping rate for the transfer pumps is 1,000 gpm.

ASSUMPTIONS

1. The design pumping rate will be the output of two transfer pumps (1,000 gpm).
2. The first floor elevation of the proposed treatment building will be 562 ft msl and the elevation of the suction for the transfer pump is 564 ft msl.
3. The elevation at the highest point in the distribution system is 681 ft msl.
4. Eight inch ductile iron pipe will be used is used for the distribution system.
5. The design pumping rate through the 8-inch ductile iron pipe will be 1,000 gpm.
6. The inside diameter of the 8-inch ductile iron pipe is 8.38 inches.
7. The minimum pressure at the highest point in the distribution system is 20 psi.

kinematic viscosity of standard water, KV = 1.41E-05 ft^2/min
specific roughness of HDPE, e1 = 0.000005
acceleration due to gravity, g = 32.2 ft/sec^2
elevation at the highest point in the system = 681 ft msl
Transfer pump suction elevation = 564 ft msl
Hazen Williams Roughness Coefficient (Plastic), C = 130
8-inch DI pipe length, L1 = 2500 ft
8-inch DI pipe inside diameter, d1 = 8.38 in Relative Roughness = 0.00001
Flowrate. Q1 = 1000 gpm
1 gpm = 0.00233 ft^3/sec

CALCULATION

1. Flow Velocity - Continuity Equation

$$Q = V \times A$$

$$v = \frac{Q \times 0.00223}{[(3.1459/4) \times (d/12)^2]}$$

v(Q1, d1) = 6.07 ft/sec

2. Calculate the velocity head and entrance loss

$$\text{Velocity head, VH} = \frac{v^2}{2 \times g}$$

VH(v(Q1, d1) = 0.57 ft

Entrance Loss, EL = $k \times (v^2/2 \times g)$ k = 1

Entrance Loss = 0.57 ft

3. Calculate equivalent lengths

8-inch check valve = 33.00 ft
8-inch 90 degree elbow = 8.90 ft
8-inch 45 degree elbow = 6.00 ft
8-inch gate valve = 3.20 ft
Flow meter = 10.00 ft
Number of check valves = 2.00
Number of 90 degree elbows = 8.00
Number of 45 degree elbows = 20.00
Number of gate valves = 4.00
Number of flow meters = 1.00

EQ1 (8-inch DI pipe) = 280.00 ft

4. Calculate the friction loss using the Hazen Williams Equation

$$hf = \frac{10.44 \text{ x } L \text{ x } V^{1.85}}{C^{1.85} \text{ x } d^{4.87}}$$

hf1 (8-inch DI pipe)= 40.34 ft

5. Summation of lift

Lift at Pump = Elevation at highest point in system - first floor elevation
Lift at Pump = 117.00 ft

6. Calculate total dynamic head

The total dynamic head is determined by summing all the losses associated with the operation of the pump with the total lift

Head = 158.49 ft

Minimum pressure at highest point (20 psi) = 46.20 ft

Factor of safety (10% TDH) = 20.47 ft

Total dynamic head = 225.16 ft

CONCLUSION

The total dynamic head that the transfer pump will work against is 225 feet.

SUMMIT CLUB
NORTH CASTLE, NEW YORK

Date: August 2022

CALCULATION OF TOTAL DYNAMIC HEAD - TRANSFER PUMPS

Calculated by: Michael Shortell
Reviewed by: Stephen Rupar

PROBLEM STATEMENT

Calculate the total dynamic head from the transfer pumps to the furthest point in the distribution system.

PROCESS DESCRIPTION

The headloss for the transfer pumps is determined by summing the losses associated with the piping losses and lift between the transfer pumps in the proposed treatment building to furthest point in the distribution system. The design pumping rate for the transfer pumps is 284 gpm.

ASSUMPTIONS

1. The design pumping rate will be the output of two of the transfer pumps (284 gpm).
2. The first floor elevation of the proposed treatment building will be 562 ft msl and the elevation of the suction for the transfer pump is 564 ft msl.
3. The elevation at the highest point in the distribution system is 681 ft msl.
4. Eight inch ductile iron pipe will be used is used for the distribution system.
5. The design pumping rate through the 8-inch ductile iron pipe will be 284 gpm.
6. The inside diameter of the 8-inch ductile iron pipe is 8.38 inches.
7. The minimum pressure at the highest point in the distribution system is 35 psi.

kinematic viscosity of standard water, KV = 1.41E-05 ft^2/min
specific roughness of HDPE, e1 = 0.000005
acceleration due to gravity, g = 32.2 ft/sec^2
elevation at the highest point in the system = 681 ft msl
Transfer pump suction elevation = 564 ft msl
Hazen Williams Roughness Coefficient (Plastic), C = 130
8-inch DI pipe length, L1 = 2500 ft
8-inch DI pipe inside diameter, d1 = 8.38 in Relative Roughness = 0.00001
Flowrate. Q1 = 284 gpm
1 gpm = 0.00233 ft^3/sec

CALCULATION

1. Flow Velocity - Continuity Equation

$$Q = V \text{ x } A$$

$$v = \frac{Q \text{ x } 0.00223}{[(3.1459/4) \text{ x } (d/12)^2]}$$

v(Q1, d1) = 1.73 ft/sec

2. Calculate the velocity head and entrance loss

$$\text{Velocity head, VH} = \frac{v^2}{2 \text{ x } g}$$

VH(v(Q1, d1) = 0.05 ft

Entrance Loss, EL = k x (v^2/2 x g) k = 1

Entrance Loss = 0.05 ft

3. Calculate equivalent lengths

8-inch check valve =	63.00	ft
8-inch 90 degree elbow =	8.90	ft
8-inch 45 degree elbow =	6.00	ft
86-inch gate valve =	3.20	ft
Flow meter =	10.00	ft
Number of check valves =	2.00	
Number of 90 degree elbows =	8.00	
Number of 45 degree elbows =	20.00	
Number of gate valves =	4.00	
Number of flow meters =	1.00	
EQ1 (8-inch DI pipe) =	340.00	ft

4. Calculate the friction loss using the Hazen Williams Equation

$$hf = \frac{10.44 \times L \times V^{1.85}}{C^{1.85} \times d^{4.87}}$$

hf1 (8-inch DI pipe)= 4.01 ft

5. Summation of lift

Lift at Pump = Elevation at highest point in system - first floor elevation

Lift at Pump = 117.00 ft

6. Calculate total dynamic head

The total dynamic head is determined by summing all the losses associated with the operation of the pump with the total lift

Head =	121.11	ft
Minimum pressure at highest point (35 psi) =	81.00	ft
Factor of safety (10% TDH) =	20.21	ft
Total dynamic head =	222.32	ft

CONCLUSION

The total dynamic head that the transfer pump will work against is 222 feet.

SUMMIT CLUB **Date: August 2022**
NORTH CASTLE, NEW YORK

CALCULATION OF TOTAL DYNAMIC HEAD - TRANSFER PUMPS - PEAK HOUR

Calculated by: Michael Shortell
Reviewed by: Stephen Rupar

PROBLEM STATEMENT

Calculate the total dynamic head from the transfer pumps to the furthest point in the distribution system.

PROCESS DESCRIPTION

The headloss for the transfer pumps is determined by summing the losses associated with the piping losses and lift between the transfer pumps in the proposed treatment building to furthest point in the distribution system. The design peak hour pumping rate for the transfer pumps is 227 gpm.

ASSUMPTIONS

1. The design pumping rate will be the output of two of the transfer pumps (227 gpm).
2. The first floor elevation of the proposed treatment building will be 562 ft msl and the elevation of the suction for the transfer pump is 564 ft msl.
3. The elevation at the highest point in the distribution system is 681 ft msl.
4. Eight inch ductile iron pipe will be used is used for the distribution system.
5. The design pumping rate through the 8-inch ductile iron pipe will be 227 gpm.
6. The inside diameter of the 8-inch ductile iron pipe is 8.38 inches.
7. The minimum pressure at the highest point in the distribution system is 35 psi.

kinematic viscosity of standard water, KV = 1.41E-05 ft^2/min
specific roughness of HDPE, e1 = 0.000005
acceleration due to gravity, g = 32.2 ft/sec^2
elevation at the highest point in the system = 681 ft msl
Transfer pump suction elevation = 564 ft msl
Hazen Williams Roughness Coefficient (Plastic), C = 130
8-inch DI pipe length, L1 = 2500 ft
8-inch DI pipe inside diameter, d1 = 8.38 in Relative Roughness = 0.00001
Flowrate. Q1 = 227 gpm
1 gpm = 0.00233 ft^3/sec

CALCULATION

1. Flow Velocity - Continuity Equation

$$Q = V \times A$$

$$v = \frac{Q \times 0.00223}{[(3.1459/4) \times (d/12)^2]}$$

v(Q1, d1) = 1.38 ft/sec

2. Calculate the velocity head and entrance loss

$$\text{Velocity head, } VH = \frac{v^2}{2 \times g}$$

VH(v(Q1, d1) = 0.03 ft

Entrance Loss, EL = $k \times (v^2/2 \times g)$ k = 1

Entrance Loss = 0.03 ft

3. Calculate equivalent lengths

8-inch check valve =	63.00	ft
8-inch 90 degree elbow =	8.90	ft
8-inch 45 degree elbow =	6.00	ft
86-inch gate valve =	3.20	ft
Flow meter =	10.00	ft
Number of check valves =	2.00	
Number of 90 degree elbows =	8.00	
Number of 45 degree elbows =	20.00	
Number of gate valves =	4.00	
Number of flow meters =	1.00	
EQ1 (8-inch DI pipe) =	340.00	ft

4. Calculate the friction loss using the Hazen Williams Equation

$$hf = \frac{10.44 \text{ x } L \text{ x } V^{1.85}}{C^{1.85} \text{ x } d^{4.87}}$$

hf1 (8-inch DI pipe)= 2.65 ft

5. Summation of lift

Lift at Pump = Elevation at highest point in system - first floor elevation

Lift at Pump = 117.00 ft

6. Calculate total dynamic head

The total dynamic head is determined by summing all the losses associated with the operation of the pump with the total lift

Head =	119.71	ft
Minimum pressure at highest point (35 psi) =	81.00	ft
Factor of safety (10% TDH) =	20.07	ft
Total dynamic head =	220.78	ft

CONCLUSION

The total dynamic head that the transfer pump will work against is 221 feet.

PLATES

Summit Club Residential

568 Bedford Road (Route 22)
Town of North Castle, New York

Water Supply, Treatment and Distribution
North Castle, New York
August 2022

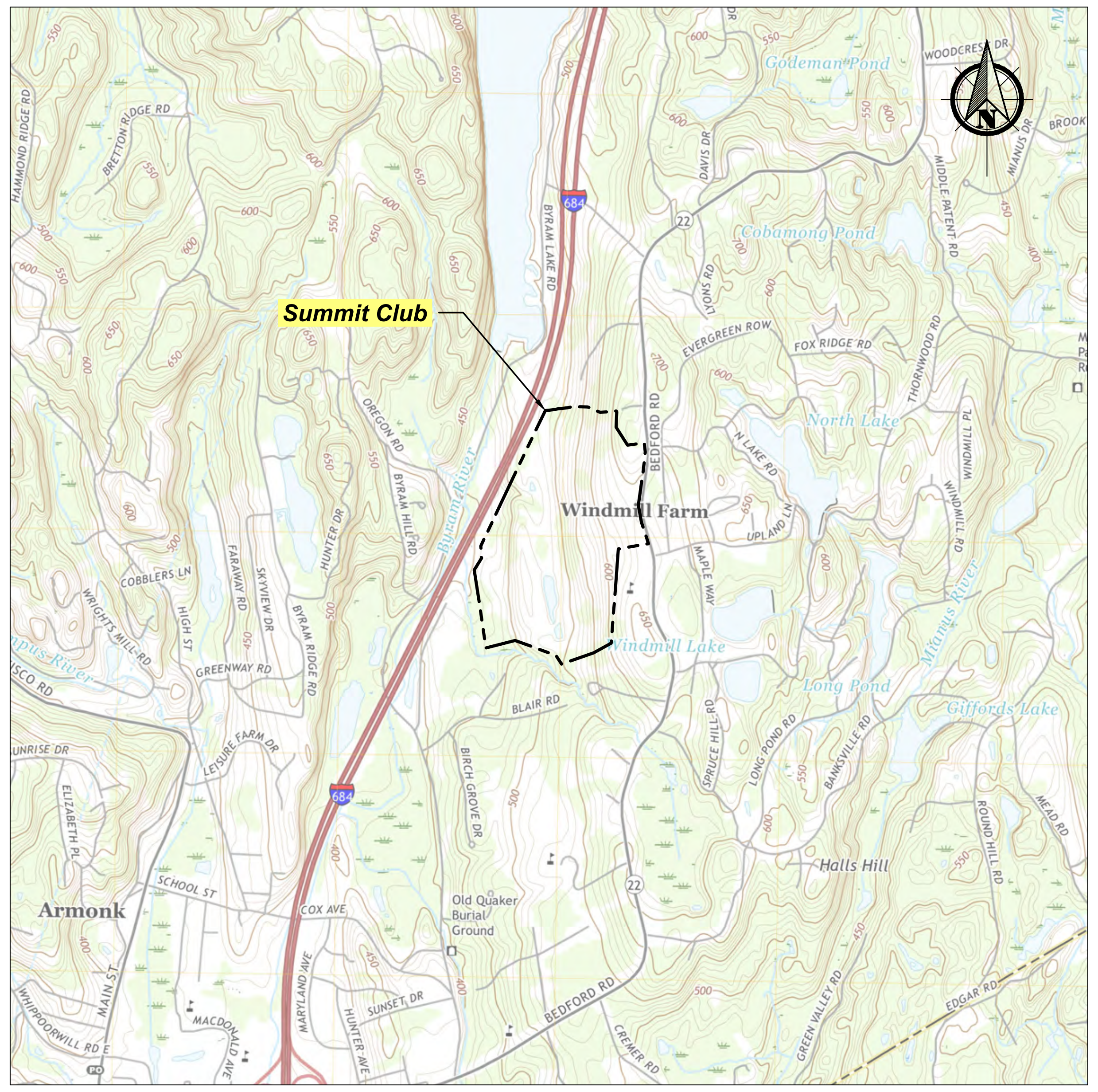

SITE LOCATION MAP
SCALE: 1" = 2000'

INDEX OF DRAWINGS

DRAWING N0.	DRAWING TITLE
TS	TITLE SHEET
1	SITE PLAN
1A	PARTIAL SITE PLAN
2	PROJECT NOTES, EQUIPMENT LIST, PROCESS FLOW DIAGRAM AND WELL PROFILE
3	PROPOSED TREATMENT BUILDING DETAILS
4	WELL SETTINGS AND PIPING DETAILS
5	PIPING DETAILS
6	105,000-GALLON ABOVE GRADE POTABLE WATER ATMOSPHERIC STORAGE TANK DETAILS
7	DISTRIBUTION SYSTEM PLAN AND PROFILE
8	DISTRIBUTION SYSTEM PLAN AND PROFILE
9	OVERSIZED WATER MAIN PLAN AND PROFILE

VICINITY MAP
SCALE: 1" = 1000'

WSP USA

6 RESEARCH DRIVE, SUITE 260
SHELTON, CONNECTICUT 06484

D

O:\DWG\Brynwood\Summit Club\Water Supply\TitleSheet.dwg, Layout1, 9/29/2022 9:29:07 AM, DWG To PDF.pc3

REVISIONS
DESCRIPTION
REV
Revised: Chkd: Appr:
Revised: Chkd: Appr:
Revised: Chkd: Appr:

SEAL
DATE

DRAWN BY	RAC
CHECKED	MS
APPROVED	SR
DRAWING DATE	01/06/22

PROPERTY OF WSP USA
IMPORTANT: THIS DRAWING PRINT IS LOANED FOR MUTUAL ASSISTANCE AND AS SUCH IS SUBJECT TO RECALL AT ANY TIME. INFORMATION CONTAINED HEREON IS NOT TO BE DISCLOSED OR REPRODUCED IN ANY FORM FOR THE BENEFIT OF PARTIES OTHER THAN NECESSARY SUBCONTRACTORS AND SUPPLIERS WITHOUT THE WRITTEN CONSENT OF WSP USA

NOTICE: THIS DRAWING HAS BEEN PREPARED UNDER THE DIRECTION OF A LICENSED PROFESSIONAL ENGINEER, IT IS A VIOLATION OF ARTICLE 130 OF THE NEW YORK STATE EDUCATION LAW FOR ANY PERSON TO ALTER THIS DOCUMENT IN ANY WAY WITHOUT THE EXPRESS WRITTEN VERIFICATION OR ADOPTION BY A NEW YORK STATE LICENSED LAND SURVEYOR OR ENGINEER IN ACCORDANCE WITH SECTION 7209 (2), ARTICLE 130, NEW YORK STATE EDUCATION LAW.

TITLE SHEET

Summit Club Residential
568 Bedford Road (Route 22)
Town of North Castle, New York

WSP USA Inc.
6 Research Drive, Suite 260
Shelton, Connecticut 06484
(203) 929-8555

1 of 11

Sheet Number
TS

LEGEND

▬ ▬ ▬	PROPERTY BOUNDARY
WF G12	EXISTING FLAGGED WETLAND BOUNDARY
— — —	EXISTING WETLAND BUFFER
— —560— —	EXISTING CONTOUR
—650—	PROPOSED CONTOUR
⊕	EXISTING WELL
—E—E—	EXISTING ELECTRICAL LINE
—G—G—	EXISTING GAS LINE
— SW — SW —	EXISTING STORMWATER PIPE
— S — S —	EXISTING SANITARY SEWER MAIN
— SW — SW —	PROPOSED STORMWATER PIPE
— S — S —	PROPOSED SANITARY SEWER MAIN
———	PROPOSED 8-INCH DIA. DUCTILE IRON WATER MAIN
—DS—DS—DS—DS—	PROPOSED 4-INCH DIA. DUCTILE IRON DOMESTIC SERVICE CONNECTION
—F—F—F—F—F—	PROPOSED 4-INCH DIA. DUCTILE IRON FIRE SERVICE CONNECTION
— RW — RW —	PROPOSED 4-INCH DIA. HDPE RAW WATER PIPE
●	PROPOSED FIRE HYDRANT

0 150
SCALE IN FEET

D

SOURCE:
JMC "LAY-GRAD-UTIL_2022-05-11.dwg" EMAILED AUTOCAD FILE.

O:\DWG\Brynwood\Summit Club\Water Supply\P1_SitePlan.dwg, Layout1, 9/29/2022 9:27:16 AM, DWG To PDF.pc3

REVISIONS

REV	DESCRIPTION		
1	Revised:	Chkd:	Appr.:
2	Revised:	Chkd:	Appr.:
3	Revised:	Chkd:	Appr.:

SEAL

DATE

DRAWN BY	08/16/22
CHECKED	MS
APPROVED	SR
DRAWING DATE	06/21/22

PROPERTY OF WSP USA
IMPORTANT: THIS DRAWING PRINT IS LOANED FOR MUTUAL ASSISTANCE AND AS SUCH IS SUBJECT TO RECALL AT ANY TIME. INFORMATION CONTAINED HEREON IS NOT TO BE DISCLOSED OR REPRODUCED IN ANY FORM FOR THE BENEFIT OF PARTIES OTHER THAN NECESSARY SUBCONTRACTORS AND SUPPLIERS WITHOUT THE WRITTEN CONSENT OF WSP USA

NOTICE: THIS DRAWING HAS BEEN PREPARED UNDER THE DIRECTION OF A LICENSED PROFESSIONAL ENGINEER, IT IS A VIOLATION OF ARTICLE 130 OF THE NEW YORK STATE EDUCATION LAW FOR ANY PERSON TO ALTER THIS DOCUMENT IN ANY WAY WITHOUT THE EXPRESS WRITTEN VERIFICATION OR ADOPTION BY A NEW YORK STATE LICENSED LAND SURVEYOR OR ENGINEER IN ACCORDANCE WITH SECTION 7209 (2), ARTICLE 130, NEW YORK STATE EDUCATION LAW.

SITE PLAN

Summit Club Residential
568 Bedford Road (Route 22)
Town of North Castle, New York

WSP USA Inc.
6 Research Drive, Suite 260
Shelton, Connecticut 06484
(203) 929-8555

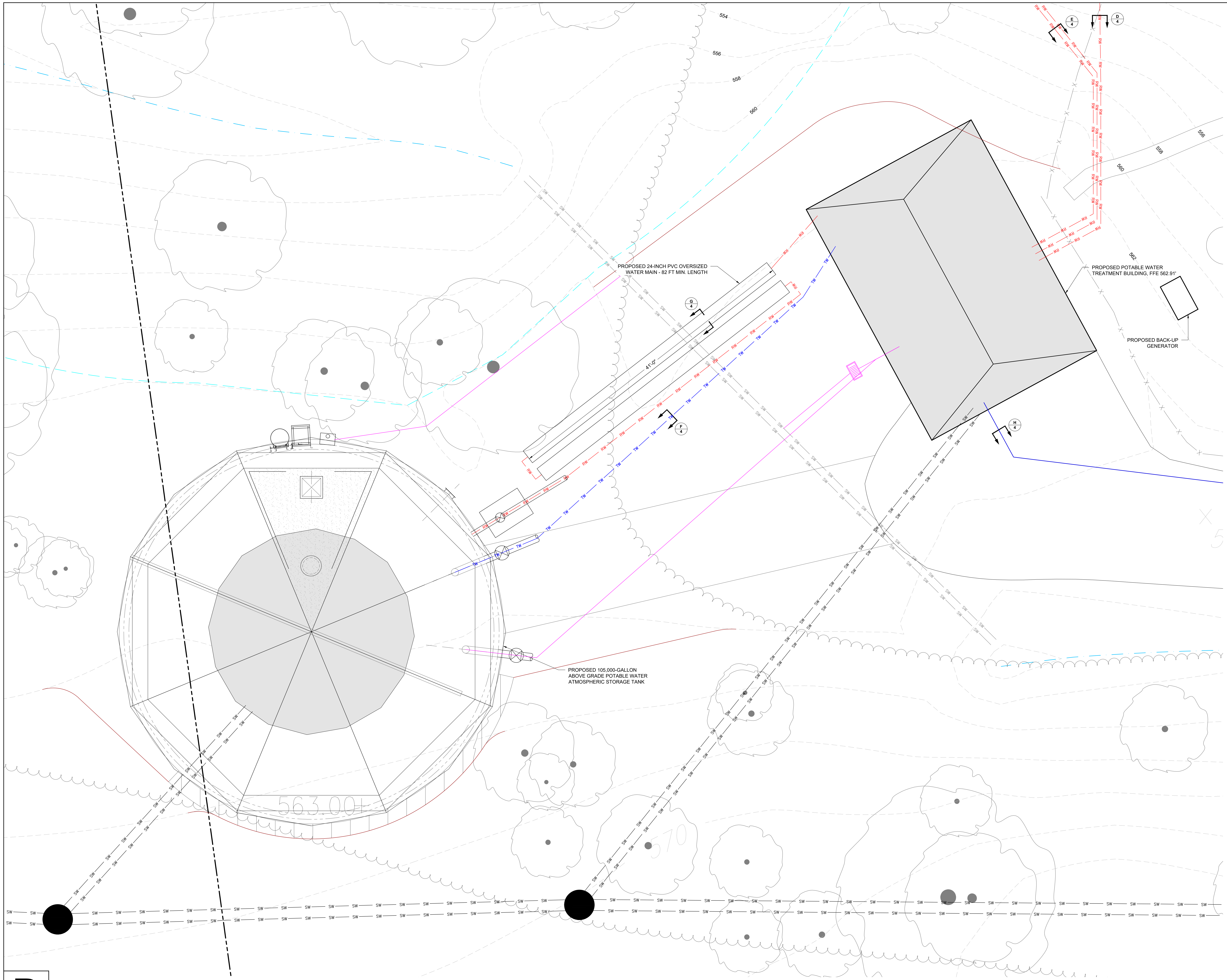

D

SOURCE:
JMC "LAY-GRAD-UTIL_2022-05-11.dwg" EMAILED AUTOCAD FILE.

O:\DWG\Brynwood\Summit Club\Water Supply\P1_SitePlan.dwg, Layout2, 9/29/2022 9:27:48 AM, DWG To PDF.pc3

LEGEND

━ ━ ━	PROPERTY BOUNDARY
— — —	EXISTING WETLAND BUFFER
— — 560 — —	EXISTING CONTOUR
—650—	PROPOSED CONTOUR
— SW — SW —	EXISTING STORMWATER PIPE
———	PROPOSED 8-INCH DIA. DUCTILE IRON WATER MAIN
— RW — RW —	PROPOSED 4-INCH DIA. HDPE RAW WATER PIPE
— TW — TW —	PROPOSED 8-INCH DIA. HDPE TREATED WATER PIPE

0 6
SCALE IN FEET

REVISIONS

REV	DESCRIPTION
1	Revised: Chkd: Appr:
2	Revised: Chkd: Appr:
3	Revised: Chkd: Appr:

SEAL

DATE

DRAWN BY	RAC
CHECKED	MS
APPROVED	SR
DRAWING DATE	08/16/22

PROPERTY OF WSP USA
IMPORTANT: THIS DRAWING PRINT IS LOANED FOR MUTUAL ASSISTANCE AND AS SUCH IS SUBJECT TO RECALL AT ANY TIME. INFORMATION CONTAINED HEREON IS NOT TO BE DISCLOSED OR REPRODUCED IN ANY FORM FOR THE BENEFIT OF PARTIES OTHER THAN NECESSARY SUBCONTRACTORS AND SUPPLIERS WITHOUT THE WRITTEN CONSENT OF WSP USA

NOTICE: THIS DRAWING HAS BEEN PREPARED UNDER THE DIRECTION OF A LICENSED PROFESSIONAL ENGINEER, IT IS A VIOLATION OF ARTICLE 130 OF THE NEW YORK STATE EDUCATION LAW FOR ANY PERSON TO ALTER THIS DOCUMENT IN ANY WAY WITHOUT THE EXPRESS WRITTEN VERIFICATION OR ADOPTION BY A NEW YORK STATE LICENSED LAND SURVEYOR OR ENGINEER IN ACCORDANCE WITH SECTION 7209 (2), ARTICLE 130, NEW YORK STATE EDUCATION LAW.

PARTIAL SITE PLAN

Summit Club Residential
568 Bedford Road (Route 22)
Town of North Castle, New York

WSP USA Inc.
6 Research Drive, Suite 260
Shelton, Connecticut 06484
(203) 929-8555

PROJECT NOTES

A. MOBILIZATION SHALL CONSIST OF: 1) DELIVERY TO THE SITE OF ALL EQUIPMENT, MATERIALS AND SUPPLIES TO BE FURNISHED BY THE CONTRACTOR; 2) COMPLETE PREPARATION IN SATISFACTORY WORKING ORDER OF ALL EQUIPMENT FOR THE JOB; AND 3) THE SATISFACTORY AND SECURE STORAGE OF ALL MATERIALS AND SUPPLIES. AREAS FOR STAGING EQUIPMENT AND MATERIALS WILL BE DESIGNATED BY THE ENGINEER TO CAUSE THE LEAST INTERFERENCE TO SITE ACTIVITIES.

B. DEMOBILIZATION SHALL CONSIST OF REMOVAL FROM THE SITE OF ALL EQUIPMENT, TRASH AND DEBRIS AFTER COMPLETION OF THE WORK. THE CONTRACTOR IS RESPONSIBLE FOR RESTORING THE AREA TO THE CONDITION THAT EXISTED PRIOR TO THE WORK, INCLUDING REPLACEMENT OR REPAIR OF ANY SITE FEATURES THAT WERE AFFECTED (I.E., FENCES, WALLS, PAVEMENT), AS WELL AS THE GRADING, RAKING AND SEEDING OF DISTURBED LAWN AREAS.

C. ALL SITE WORK IS TO COMPLY WITH ALL APPLICABLE FEDERAL, STATE AND LOCAL SAFETY STANDARDS, AS WELL AS THE SAFETY PROCEDURES LISTED IN THE "MANUAL OF ACCIDENT PREVENTION IN CONSTRUCTION", ISSUED BY THE ASSOCIATED GENERAL CONTRACTORS OF AMERICA (AGC PUBLICATION NO. 100). THE CONTRACTOR SHALL BEAR THE COST OF PROVIDING WARNING DEVICES, FENCES, TRAFFIC CONTROL MEASURES AND OTHER SAFETY MEASURES, AS NEEDED, FOR THE WORK TO BE COMPLETED. SAFETY MEASURES WILL BE REQUIRED WHEN WORKING ALONG OR IN STATE OR LOCAL ROADS. ALL EXCAVATIONS WILL BE COVERED AND EQUIPMENT AND MATERIALS SECURED AT THE END OF EACH WORK DAY.

D. ALL ELECTRICAL, MECHANICAL, PLUMBING, CONSTRUCTION AND OTHER SITE WORK, EQUIPMENT AND MATERIALS ARE TO BE IN ACCORDANCE WITH AND TO MEET ALL APPLICABLE LAWS, CODES AND REGULATIONS.

E. ALL NEW, CLEANED OR REPAIRED POTABLE WATER PIPES SHALL BE DISINFECTED UNDER THE SUPERVISION OF THE ENGINEER IN ACCORDANCE WITH AWWA STANDARD C651-14 OR LATEST VERSION, EXCEPT SECTION 4.3 (THE TABLET METHOD) PRIOR TO USE.

F. ALL INTERIOR PIPES SHALL BE INSTALLED PLUMB AND PERPENDICULAR AND IN A NEAT FASHION. THE PIPES WILL BE INSTALLED WITH ADEQUATE SPACING BETWEEN WALLS AND OTHER PIPES TO ALLOW FOR THE INSTALLATION OF VALVES AND METERS. ALL PIPES AND FITTINGS WILL BE SUPPORTED EVERY 5-FEET IN A MANNER THAT PREVENTS SAGGING WHEN THE PIPES ARE FULL. ALL PIPE SUPPORTS WILL BE SECURED TO EITHER THE FLOOR, WALL OR CEILING OF THE PROPOSED PUMP HOUSE.

G. THE RAW WATER PIPES WILL BE COLOR-CODED OLIVE GREEN. THE TREATED WATER PIPES WILL BE COLOR-CODED DARK BLUE AND THE SODIUM HYPOCHLORITE LINES COLORED YELLOW.

H. PRIOR TO ANY SUBSURFACE WORK, THE UNDERGROUND UTILITIES CALL CENTER SHALL BE CONTACTED.

I. THE MATERIAL USED AS BACKFILL SHALL BE FREE OF ROCKS, STUMPS OR OTHER UNSUITABLE DEBRIS LARGER THAN 2-INCHES IN DIAMETER AND SHALL BE CAPABLE OF BEING COMPACTED TO 95% PROCTOR DENSITY. CLEAN TRACEABLE FILL MEETING THE ABOVE REQUIREMENT SHALL BE BROUGHT ONSITE AND USED AS BACKFILL IF THE MATERIAL REMOVED FROM THE TRENCHES IS UNSUITABLE. THE SOURCE OF FILL MUST BE PROVIDED IN ADVANCE OF DELIVERY TO THE SITE. THE ENGINEER RESERVES THE RIGHT TO REQUEST DOCUMENTATION OF FILL QUALITY AND TESTING DONE AT THE CONTRACTORS EXPENSE IF THE SOURCE DOCUMENTATION IS UNSATISFACTORY. ALL MATERIAL SHALL BE SUBJECT TO APPROVAL BY THE ENGINEER. UNSUITABLE MATERIAL WILL BE REMOVED FROM THE PROPERTY AND DISPOSED OF IN ACCORDANCE WITH ALL FEDERAL AND STATE LAWS.

J. THE LOCATION OF ALL UTILITIES AND BELOW-GRADE PIPING TO BE INSTALLED SHALL BE STAKED AND APPROVED BY THE ENGINEER PRIOR TO SITE WORK.

K. SEDIMENTATION AND EROSION CONTROLS (S&E), CONSISTING OF, BUT NOT LIMITED TO, SILT FENCING AND/OR HAY BALES, ARE TO BE INSTALLED ON THE DOWNSLOPE SIDE OF EXCAVATION AREAS. THE CONTROLS WILL BE INSTALLED PRIOR TO INITIATION OF WORK ON THE SITE, S&E ARE TO BE MAINTAINED THROUGHOUT THE DURATION OF THE PROJECT AND ARE TO BE COMBINED WITH SEDIMENTATION AND EROSION CONTROLS UTILIZED FOR OTHER ASPECTS OF THE PROJECT.

L. THE WATER PIPES FROM THE POTABLE WATER WELLS AND FOR THE DISTRIBUTION SYSTEM SHALL BE CONSTRUCTED FROM HIGH DENSITY POLYETHYLENE (HDPE), BE NSF 61 APPROVED AND BE RATED FOR 160 PSI AND SHALL BE INSTALLED AS SHOWN. ALL PIPE BEDDING SHALL BE OF THE MATERIAL AND COVER DIMENSIONS SHOWN IN THE PLANS. THE FOLLOWING PROCEDURE SHALL BE USED WHEN INSTALLING THE BURIED HDPE PIPE FOR POTABLE WATER SUPPLY.
  a. INSPECT THE PIPE FOR CUTS, GOUGES, DEEP SCRATCHES OR OTHER DAMAGE BEFORE INSTALLATION. IF A CUT OR GOUGE IS DEEPER THAN 10 PERCENT OF THE MINIMUM WALL THICKNESS OF THE PIPE, THAT SECTION SHALL BE REMOVED AND DISCARDED.
  b. INSPECT THE PIPE FOR KINKS AND REMOVE AND DISCARD ALL KINKED SECTIONS.
  c. ALL BENDS SHALL BE LONG RADIUS BENDS AND WELDED JOINTS SHALL BE USED FOR ALL PIPING CONNECTIONS
  d. COMPACT THE TRENCH BOTTOM AND SMOOTH ANY DEPRESSION OR CAVITIES
  e. BURY THE PIPE AS SHOWN ON THE PLANS, COMPACTING THE PIPE EMBEDMENT AND BACKFILL MATERIAL IN 1-FOOT LIFTS.

M. PRESSURE TESTING OF THE HDPE PIPE SHALL BE CONDUCTED IN ACCORDANCE WITH AWWA M55 AND ASTM F2164 AT 100 PSI.

N. UNDERGROUND WARNING TAPES SHALL BE PLACED ABOVE THE BURIED WATER PIPES AND ELECTRICAL CONDUIT AS SHOWN ON THE PLANS.

O. AFTER DISINFECTING AND BEFORE PLACING IN SERVICE, TWO WATER SAMPLES WILL BE COLLECTED (A MINIMUM OF 24 HOURS APART) FROM EACH WELL WITHIN THE TREATMENT BUILDING AND AFTER THE ATMOSPHERIC STORAGE TANK, AND SUBMITTED FOR HETEROTROPHIC PLATE COUNT (HPC) AND BACTERIOLOGICAL.

P. ALL SAMPLE TAPS SHALL BE SMOOTH NOSE SAMPLE TAPS.

Q. THE OPERATION OF THE CHEMICAL METERING PUMPS WILL BE INTERLOCKED WITH THE OPERATION OF THE SUBMERSIBLE WELL PUMPS AND EACH WATER SUPPLY WELL WILL BE EQUIPPED WITH A DEDICATED CHEMICAL METERING PUMP THAT IS ADJUSTED TO THE PUMPING RATE OF THE WELL.

R. THE CONTRACTOR WILL BE REQUIRED TO RETAIN THE SERVICES OF A LICENSED LAND SURVEYOR TO DEVELOP AS-BUILT (RECORD DRAWINGS) OF ALL SUBSURFACE WATER SUPPLY PIPES AND ELECTRICAL CONDUIT.

S. EQUIPMENT SUBSTITUTIONS WILL NOT BE PERMITTED WITHOUT PRIOR APPROVAL FROM THE ENGINEER.

T. THE PRESSURE TRANSDUCER POSITIONED IN THE 105,000-GALLON ABOVE GRADE POTABLE WATER ATMOSPHERIC STORAGE TANK WILL ALLOW FOR ADJUSTMENT IN THE HIGH/HIGH, HIGH, LOW, MID/LOW AND LOW/LOW LEVEL SETTINGS.

U. THE OPERATION OF WELL #1, WELL #3 AND WELL #6A WILL ALTERNATE WHEN THE PRESSURE TRANSDUCER IN THE 105,000-GALLON ABOVE GRADE POTABLE WATER ATMOSPHERIC STORAGE TANK INDICATES A LOW LEVEL SETTING.

V. THE ELECTRICAL CONTROLS WILL BE EQUIPPED WITH A TELEMETRY SYSTEM TO NOTIFY THE CERTIFIED OPERATOR IF A MALFUNCTION OCCURS.

W. THE PROPOSED PUMP HOUSE WILL BE EQUIPPED WITH A SUPPLY OF PROTECTIVE CLOTHING (APRON, GOGGLES AND GLOVES) TO BE USED FOR SAFE HANDLING OF THE SODIUM HYPOCHLORITE.

X. THE BACKUP GENERATOR WILL HAVE THE CAPABILITY OF OPERATING ALL THE WATER-SUPPLY AND TREATMENT EQUIPMENT, LIGHTING, HEATING AND CONTROLS.

Y. THE TREATMENT BUILDING WILL BE EQUIPPED WITH ADEQUATE HEATING, LIGHTING AND VENTILATION. THE VENTILATION WILL ACCOUNT FOR THE ONSITE STORAGE OF SODIUM HYPOCHLORITE.

Z. THE CONTRACTOR WILL BE REQUIRED TO RETAIN THE SERVICES OF A DRILLING CONTRACTOR TO INSTALL TEST BORINGS TO CONFIRM THE DEPTH TO BEDROCK ALONG THE DIRECTIONAL DRILLING ROUTES.

AA. THE EXISTING POTABLE WATER SUPPLY SERVICE FROM THE TOWN OF NORTH CASTLE WILL BE PERMANENTLY ABANDONED.

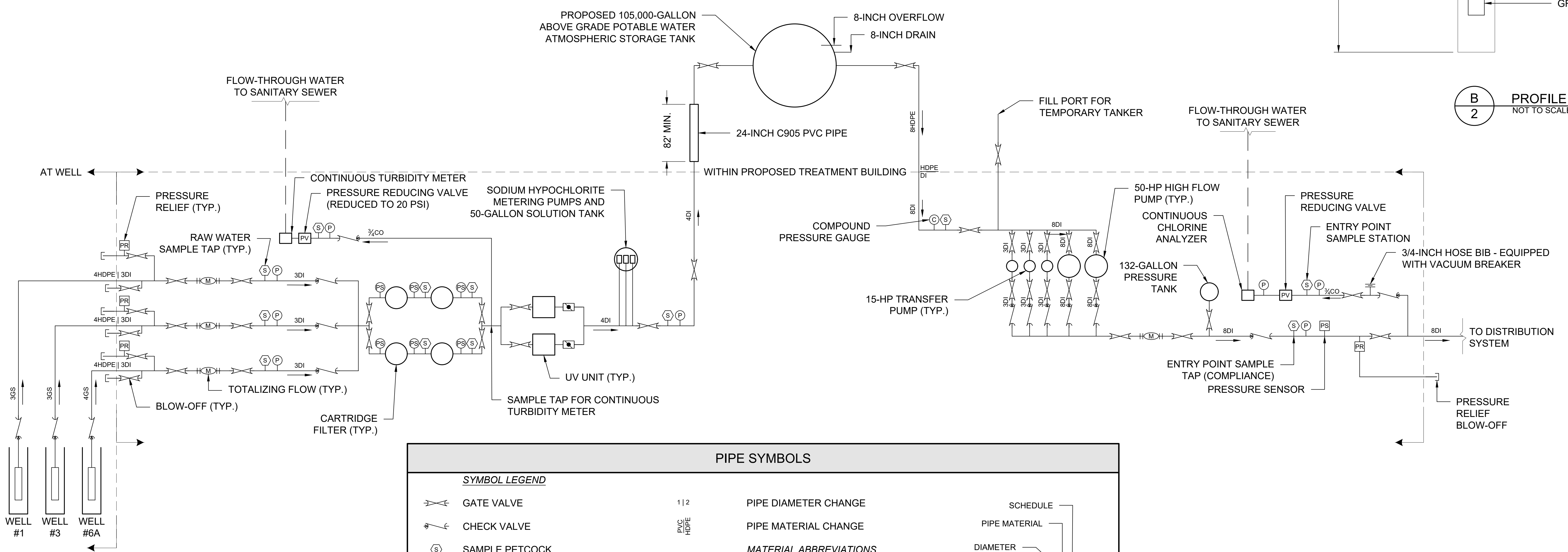

PIPE SYMBOLS

SYMBOL LEGEND

⋈	GATE VALVE
⟋	CHECK VALVE
Ⓢ	SAMPLE PETCOCK
Ⓟ	PRESSURE GAUGE
Ⓒ	COMPOUND PRESSURE GAUGE
Ⓜ	TOTALIZING FLOW METER
PR	PRESSURE RELIEF
PS	PRESSURE SENSOR/SWITCH
1 | 2	PIPE DIAMETER CHANGE
PVC/HDPE	PIPE MATERIAL CHANGE

MATERIAL ABBREVIATIONS

HDPE	HIGH DENSITY POLYETHYLENE
CO	COPPER
DI	DUCTILE IRON

4PVC80 / WATER: DIAMETER, PIPE MATERIAL, SCHEDULE, FLOW DIRECTION, FLUID DESCRIPTION

A / 5 PROCESS FLOW DIAGRAM
NOT TO SCALE

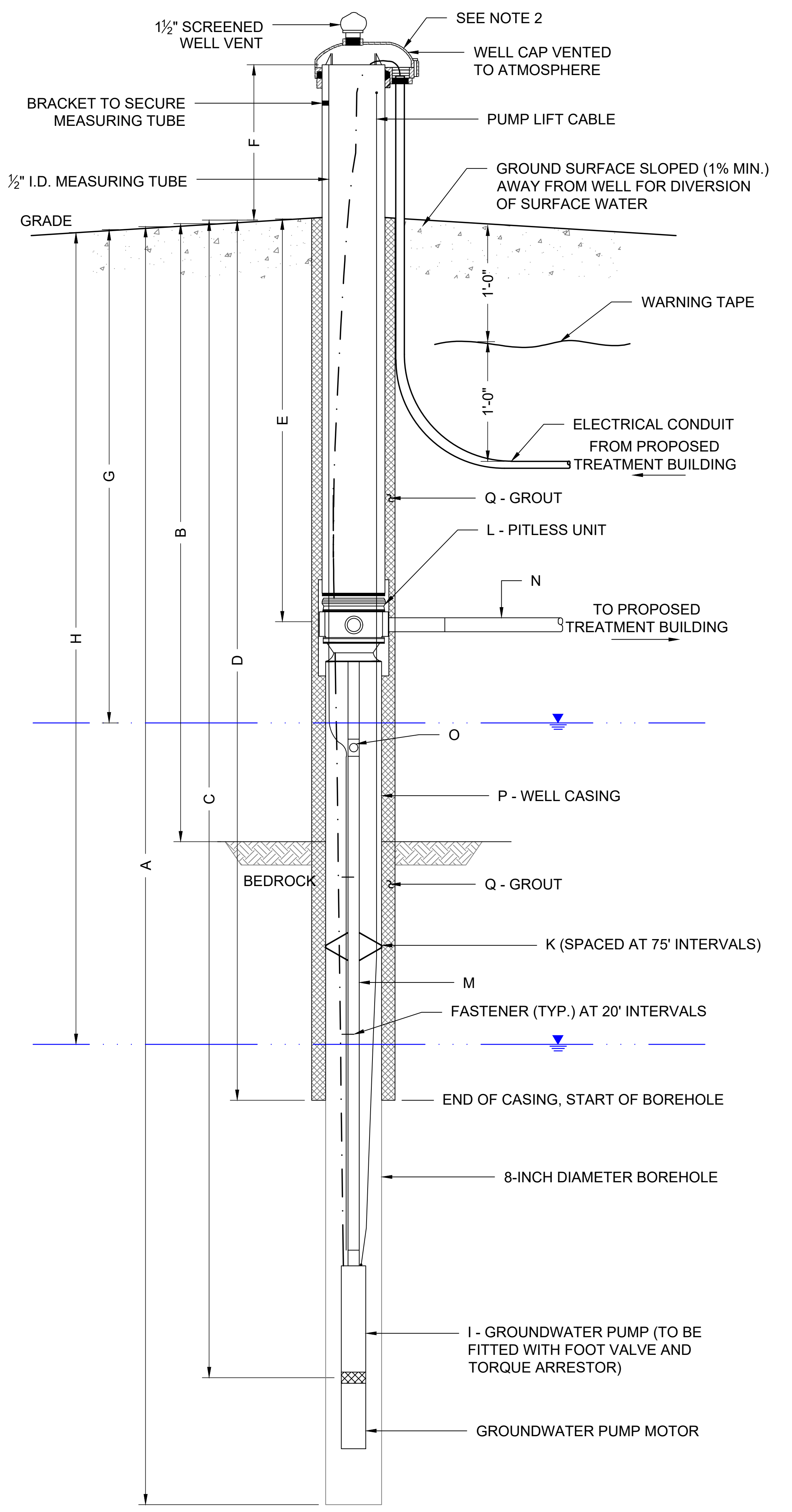

B / 2 PROFILE OF WELL - TYPICAL
NOT TO SCALE

ITEM	WELL #1	WELL #3	WELL #6A	COMMENTS
A	575	645	625	TOTAL DEPTH OF WELL (FT BG)
B	17	27	26	DEPTH TO BEDROCK (FT BG)
C	275	150	150	PUMP PLACEMENT DEPTH (FT BG)
D	51	61	61	DEPTH OF CASING (FT BG)
E	4.5	4.5	4.5	DEPTH OF PITLESS CONNECTION (FT BG)
F	MINIMUM 1.5	MINIMUM 1.5	MINIMUM 1.5	HEIGHT OF WELL CAP ABOVE GRADE (FT)
G	ARTESIAN	ARTESIAN	ARTESIAN	STATIC WATER LEVEL (FT BG)
H	248	109	109	PUMPING WATER LEVEL (FT BG)
I	GOULDS 35GS50	GOULDS 35GS50	GOULDS 45GS50	SUBMERSIBLE PUMP MANUFACTURER AND MODEL
J	37 GPM @ 500 FT	33 GPM @ 331 FT	43 GPM @ 345 FT	PUMP DESIGN FLOW AND TOTAL DYNAMIC HEAD
K	MONOFLEX SCC8x20	MONOFLEX SCC8x20	MONOFLEX SCC8x20	CENTRALIZER, MANUFACTURER AND MODEL
L	BAKER MONITOR DIVISION 5.0PS67WBWE23T4SF	BAKER MONITOR DIVISION 5.0PS67WBWE23T4SF	BAKER MONITOR DIVISION 5.0PS67WBWE23T4SF	PITLESS CONNECTION MANUFACTURER AND MODEL
M	3-INCH GALVANIZED STEEL	3-INCH GALVANIZED STEEL	3-INCH GALVANIZED STEEL	RISER PIPE DIAMETER
N	4-INCH HDPE DISCHARGE	3-INCH HDPE DISCHARGE	4-INCH HDPE DISCHARGE	DISCHARGE PIPE DIAMETER
O	3-INCH BRONZE	3-INCH BRONZE	3-INCH BRONZE	CHECK VALVE
P	6-INCH	6-INCH	6-INCH	NEW SINGLE STEEL CASING PIPE MEETING AWWA STANDARD A-100, ASTM OR SPI SPECIFICATIONS FOR WATER WELL CONSTRUCTION - MINIMUM OF 0.280 INCH THICKNESS
Q	BOTTOM OF WELL CASING TO GRADE	BOTTOM OF WELL CASING TO GRADE	BOTTOM OF WELL CASING TO GRADE	NEAT CEMENT GROUT CONFORMING TO AWWA A100, AND WATER WILL BE USED. GROUT SHALL BE A MINIMUM OF 1.5 INCHES THICK AND SHALL MEET PART 5, SUBPART 5-1 APPENDIX 5-A STANDARDS

FT BG: FEET BELOW GRADE

NOTES:
1. A TORQUE ARRESTOR SHALL BE INSTALLED ON THE RISER PIPE IMMEDIATELY ABOVE EACH PUMP TO MINIMIZE MOVEMENT OF THE PUMP AND RISER PIPE WHEN THE PUMP STARTS.
2. THE WELLHEAD WILL BE EQUIPPED WITH A LOCKING HASP OR A BOLT REPLACED WITH A COMMON-KEYED PAD LOCK.

CONTROL TABLE

CONDITION	SENSOR LOCATION	WELL PUMPS ON	WELL PUMPS OFF	POTABLE BOOSTER PUMPS ON	POTABLE BOOSTER PUMPS OFF	TELEMETRY SYSTEM-OPERATING NOTIFICATION
HIGH/HIGH LEVEL	ATMOSPHERIC STORAGE TANK		X			X
HIGH LEVEL	ATMOSPHERIC STORAGE TANK		X			
LOW LEVEL	ATMOSPHERIC STORAGE TANK	X				
MID/LOW LEVEL	ATMOSPHERIC STORAGE TANK	X (SEE NOTE1)				
LOW/LOW LEVEL	ATMOSPHERIC STORAGE TANK	X				X
PRESSURE SENSOR - LESS THAN 70 PSI	PRESSURE TANK (PUMP HOUSE)			X		
PRESSURE SENSOR - EQUAL TO 70 PSI	PRESSURE TANK (PUMP HOUSE)				X	X
PRESSURE SWITCH LOW PRESSURE	PRESSURE TANK (PUMP HOUSE)					X

NOTE:
1. THE WELL PUMP IN WELL #1, WELL #3 OR WELL #6A WILL TURN ON WHEN THE LOW LEVEL SETTING IS ACTIVATED AND WILL CONTINUE TO OPERATE UNTIL THE HIGH LEVEL SETTING IS ACTIVATED, IN THE EVENT THE WATER IN THE ATMOSPHERIC STORAGE TANK REACHES THE LOW/LOW LEVEL, ALL THREE WELL PUMPS WILL ACTIVATE. THE NEXT TIME THE LOW LEVEL SETTING IS ACTIVATED, AN ALTERNATE WELL PUMP WILL BE ACTIVATED. IN THE EVENT OF HIGH FLOW DEMAND, TWO PUMPS WILL BE ACTIVATED AT THE SAME TIME WHEN THE WATER LEVEL REACHES THE MID-LOW LEVEL.

REVISIONS

REV	DESCRIPTION		
1	Revised:	Chkd:	Appr.:
2	Revised:	Chkd:	Appr.:
3	Revised:	Chkd:	Appr.:

SEAL

DATE

DRAWN BY	RAC
CHECKED	MS
APPROVED	SR
DRAWING DATE	08/16/22

PROPERTY OF WSP USA
IMPORTANT: THIS DRAWING PRINT IS LOANED FOR MUTUAL ASSISTANCE AND AS SUCH IS SUBJECT TO RECALL AT ANY TIME. INFORMATION CONTAINED HEREON IS NOT TO BE DISCLOSED OR REPRODUCED IN ANY FORM FOR THE BENEFIT OF PARTIES OTHER THAN NECESSARY SUBCONTRACTORS AND SUPPLIERS WITHOUT THE WRITTEN CONSENT OF WSP USA

NOTICE: THIS DRAWING HAS BEEN PREPARED UNDER THE DIRECTION OF A LICENSED PROFESSIONAL ENGINEER, IT IS A VIOLATION OF ARTICLE 130 OF THE NEW YORK STATE EDUCATION LAW FOR ANY PERSON TO ALTER THIS DOCUMENT IN ANY WAY WITHOUT THE EXPRESS WRITTEN VERIFICATION OR ADOPTION BY A NEW YORK STATE LICENSED LAND SURVEYOR OR ENGINEER IN ACCORDANCE WITH SECTION 7209 (2), ARTICLE 130, NEW YORK STATE EDUCATION LAW.

PROJECT NOTES, EQUIPMENT LIST, PROCESS FLOW DIAGRAM
AND WELL PROFILE

Summit Club Residential
568 Bedford Road (Route 22)
Town of North Castle, New York

WSP USA Inc.
6 Research Drive, Suite 260
Shelton, Connecticut 06484
(203) 929-8555

O:\DWG\Brynwood\Summit Club\Water Supply\P2_ProjectNotes.dwg, Layout1, 9/29/2022 9:26:45 AM, DWG To PDF.pc3

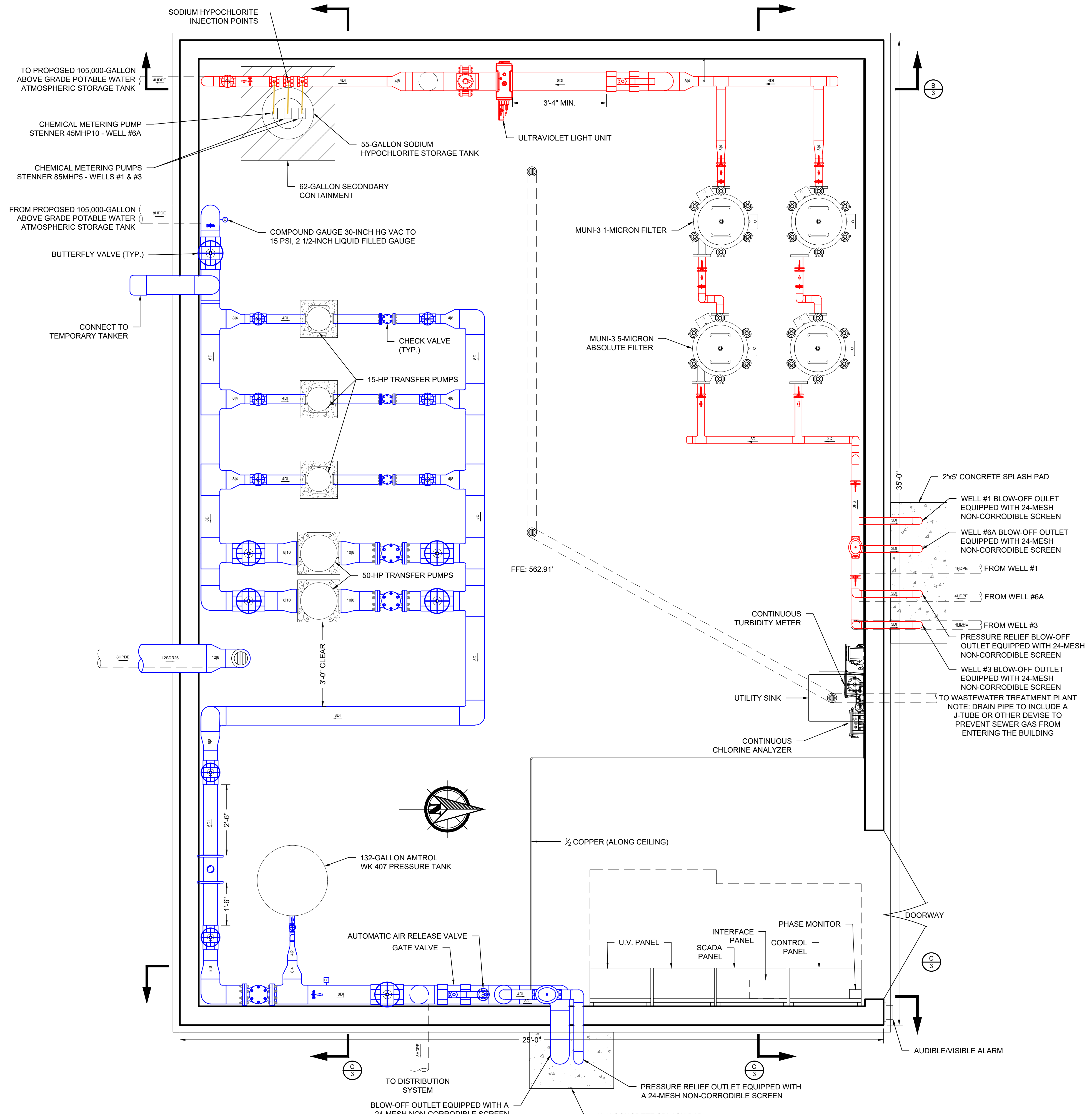

A 3 PLAN VIEW OF PROPOSED TREATMENT BUILDING

SCALE: 1" = 3'-0"

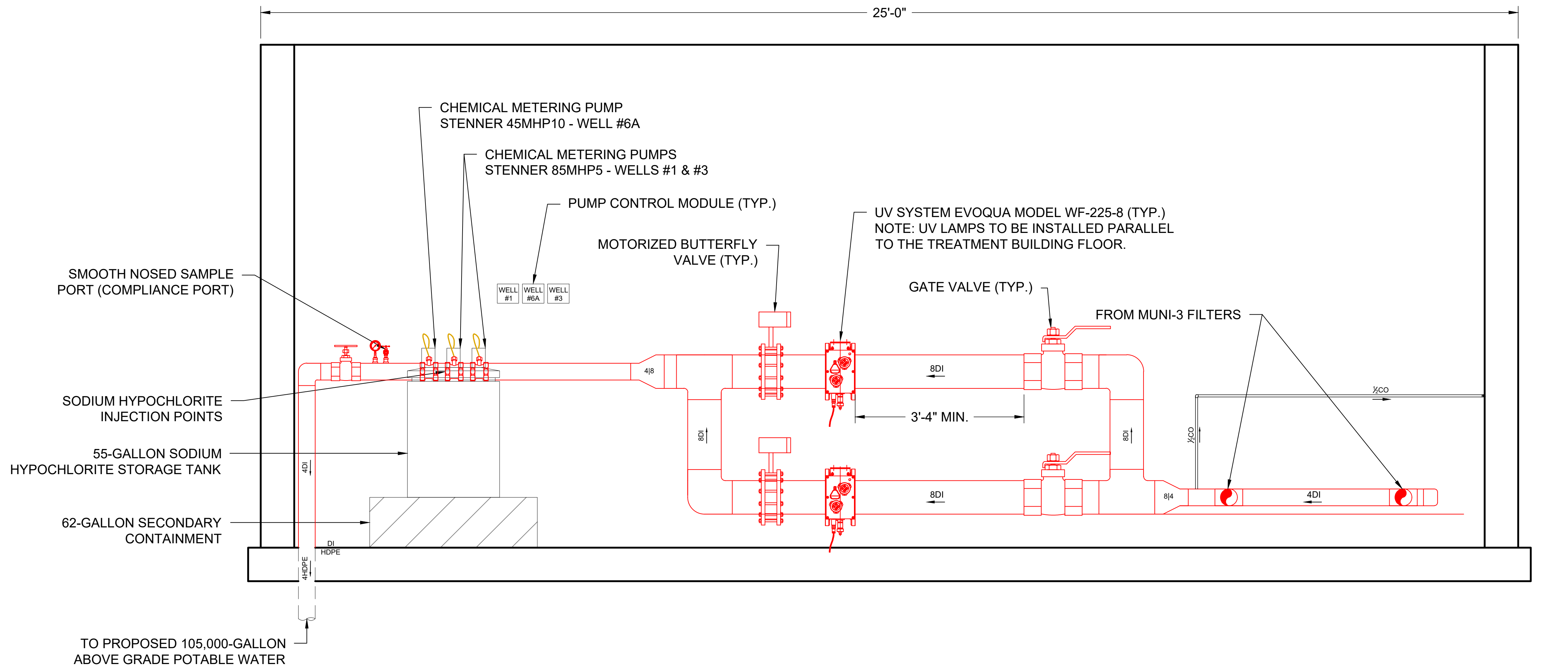

B 3 PROFILE VIEW OF WESTERN WALL

SCALE: 1" = 2'-0"

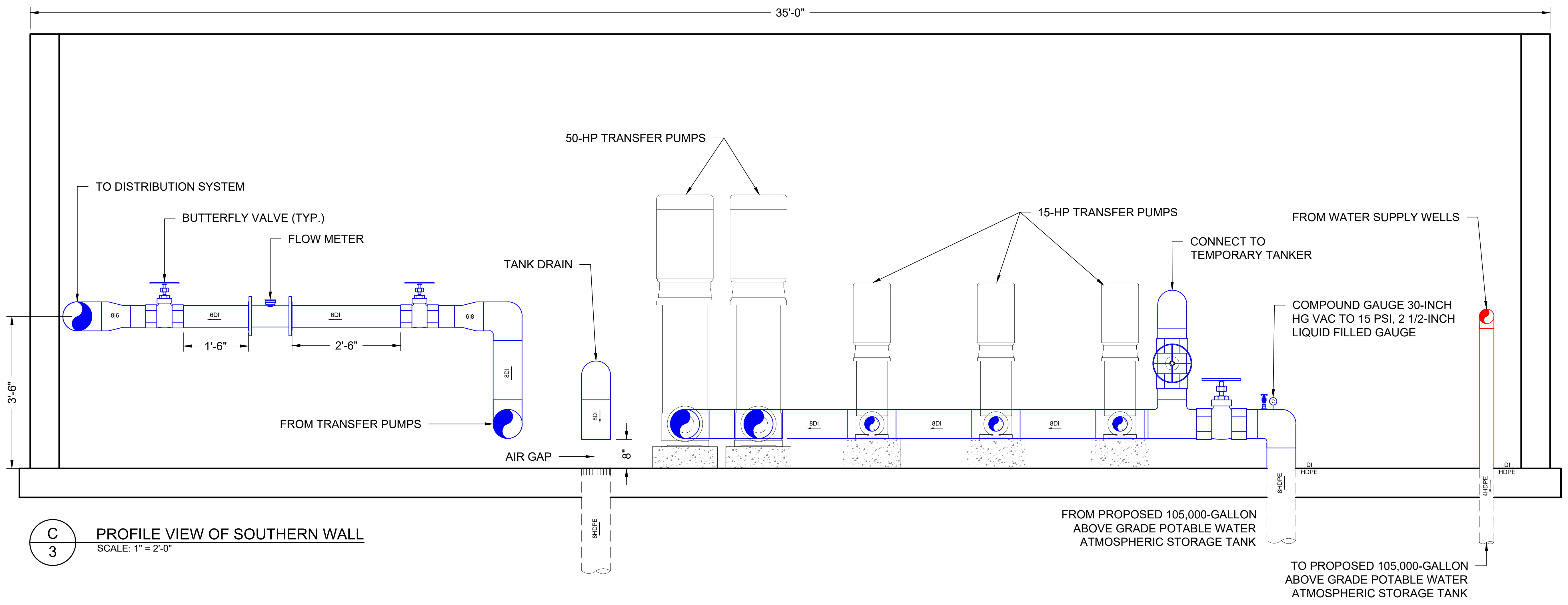

C 3 PROFILE VIEW OF SOUTHERN WALL

SCALE: 1" = 2'-0"

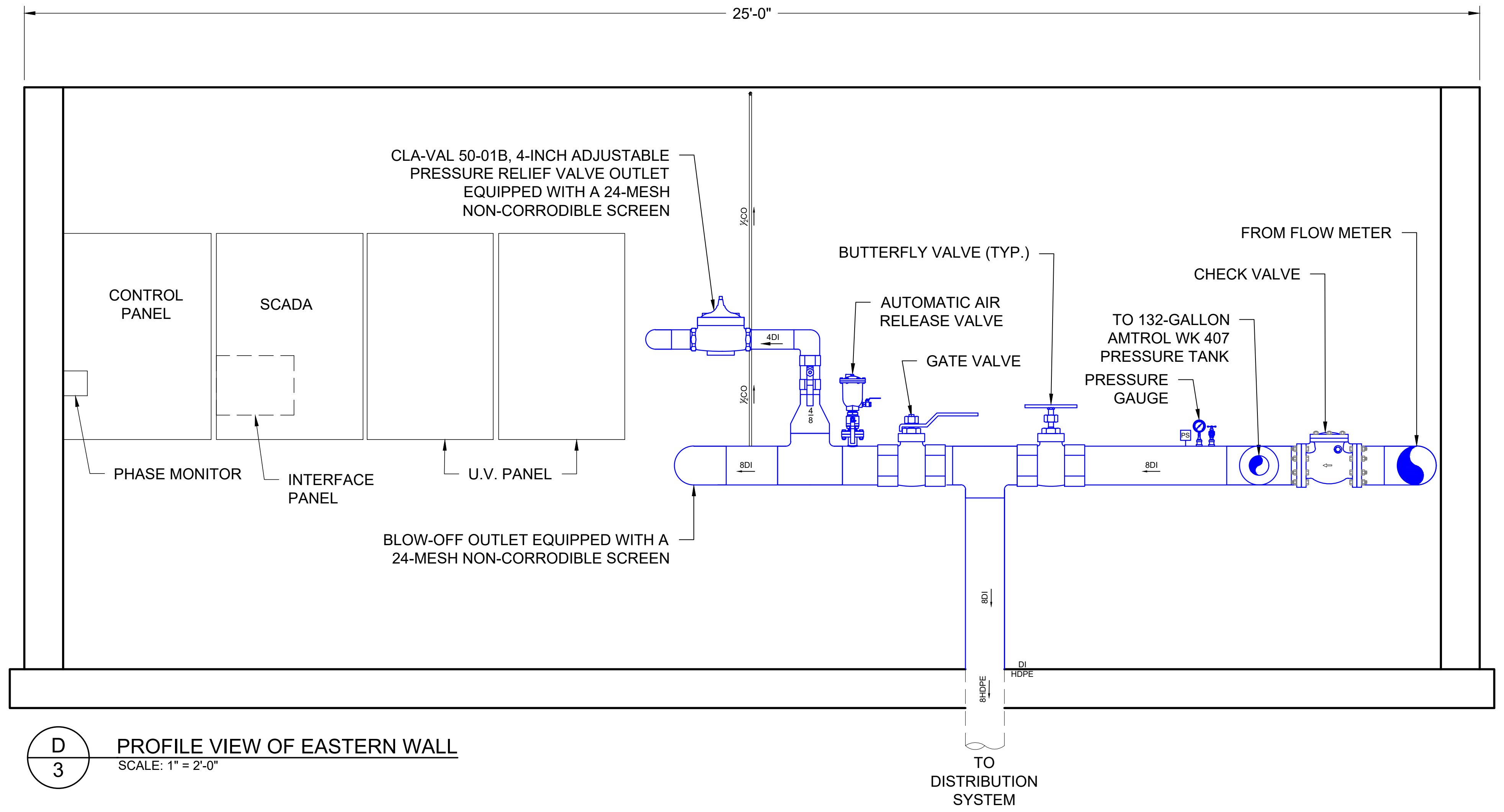

D 3 PROFILE VIEW OF EASTERN WALL

SCALE: 1" = 2'-0"

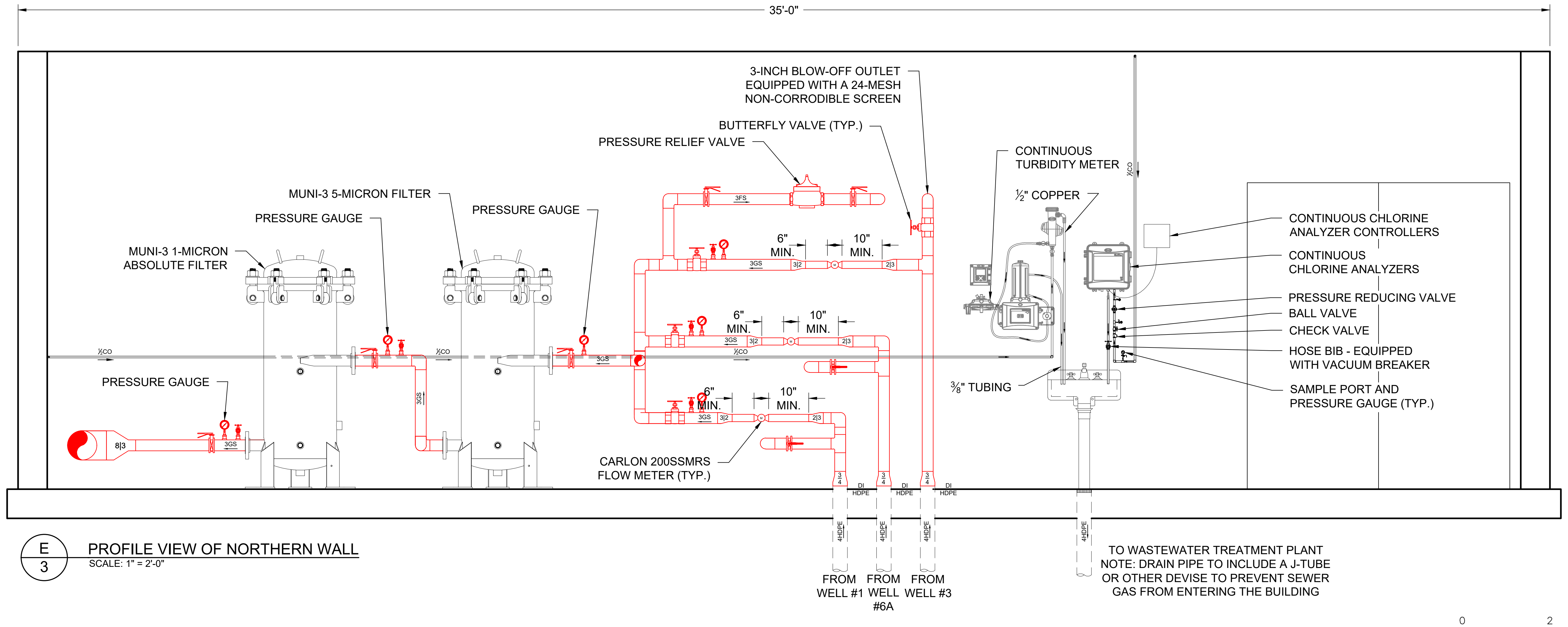

E 3 PROFILE VIEW OF NORTHERN WALL

SCALE: 1" = 2'-0"

0 2
SCALE IN FEET

REV	DESCRIPTION		
A		Revised: Chkd: Appr.:	
A		Revised: Chkd: Appr.:	
A		Revised: Chkd: Appr.:	

REVISIONS

SEAL

DATE

DRAWN BY	RAC
CHECKED	MS
APPROVED	SR
DRAWING DATE	08/16/22

PROPERTY OF WSP USA
IMPORTANT: THIS DRAWING PRINT IS LOANED FOR MUTUAL ASSISTANCE AND AS SUCH IS SUBJECT TO RECALL AT ANY TIME. INFORMATION CONTAINED HEREON IS NOT TO BE DISCLOSED OR REPRODUCED IN ANY FORM FOR THE BENEFIT OF PARTIES OTHER THAN NECESSARY SUBCONTRACTORS AND SUPPLIERS WITHOUT THE WRITTEN CONSENT OF WSP USA

NOTICE: THIS DRAWING HAS BEEN PREPARED UNDER THE DIRECTION OF A LICENSED PROFESSIONAL ENGINEER, IT IS A VIOLATION OF ARTICLE 130 OF THE NEW YORK STATE EDUCATION LAW FOR ANY PERSON TO ALTER THIS DOCUMENT IN ANY WAY WITHOUT THE EXPRESS WRITTEN VERIFICATION OR ADOPTION BY A NEW YORK STATE LICENSED LAND SURVEYOR OR ENGINEER IN ACCORDANCE WITH SECTION 7209 (2), ARTICLE 130, NEW YORK STATE EDUCATION LAW.

PROPOSED TREATMENT BUILDING DETAILS

Summit Club Residential
568 Bedford Road (Route 22)
Town of North Castle, New York

WSP USA Inc.
6 Research Drive, Suite 260
Shelton, Connecticut 06484
(203) 929-8555

5 of 11

Sheet Number
3

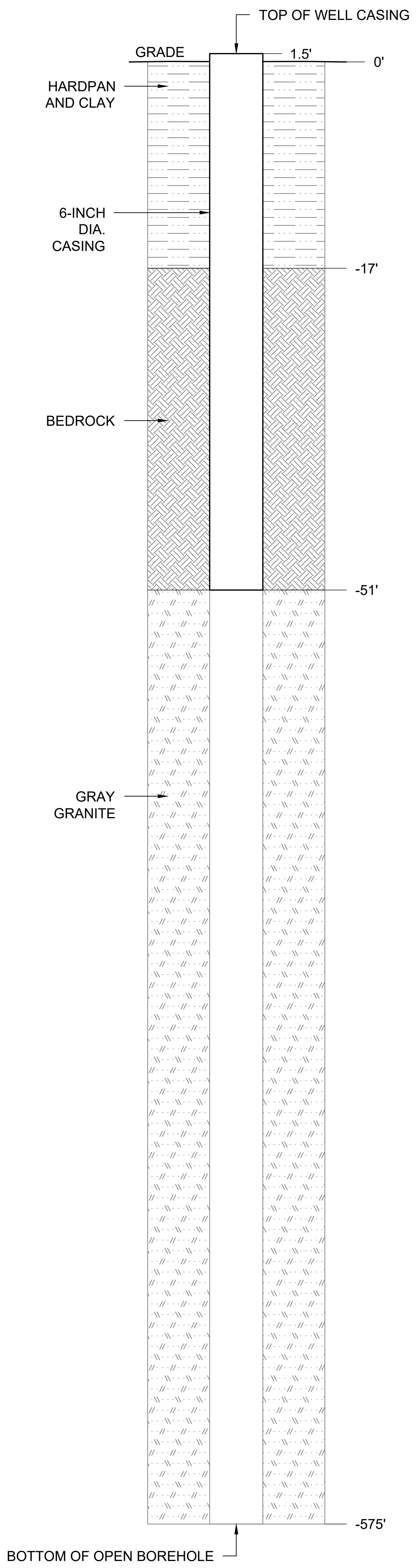

A
4
GEOLOGIC SETTING OF WELL #1
NOT TO SCALE

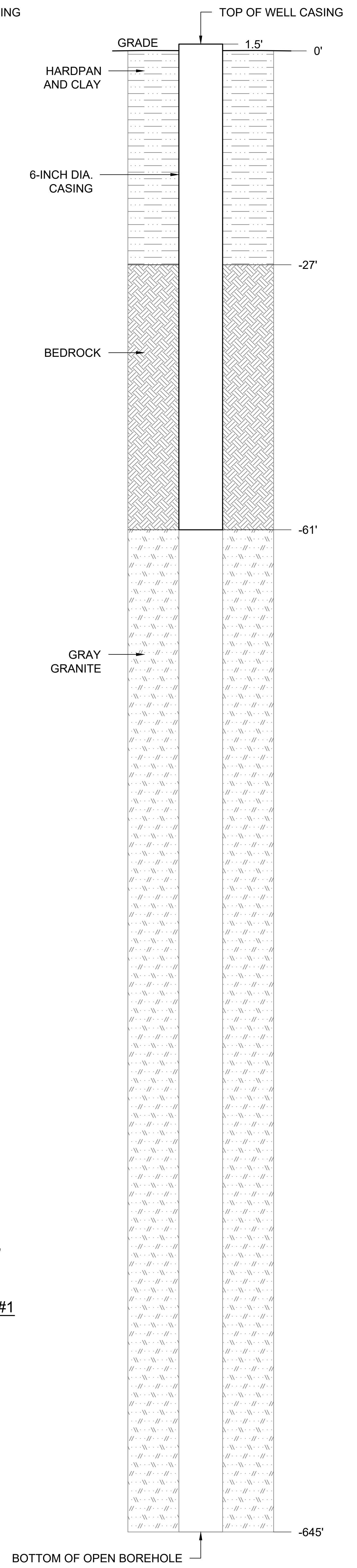

B
4
GEOLOGIC SETTING OF WELL #3
NOT TO SCALE

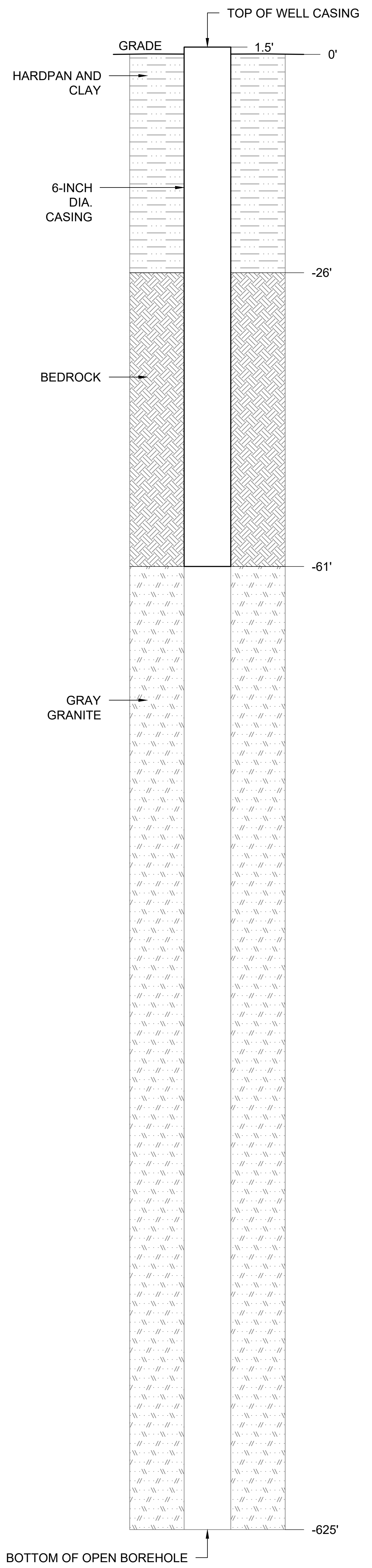

C
4
GEOLOGIC SETTING OF WELL #6A
NOT TO SCALE

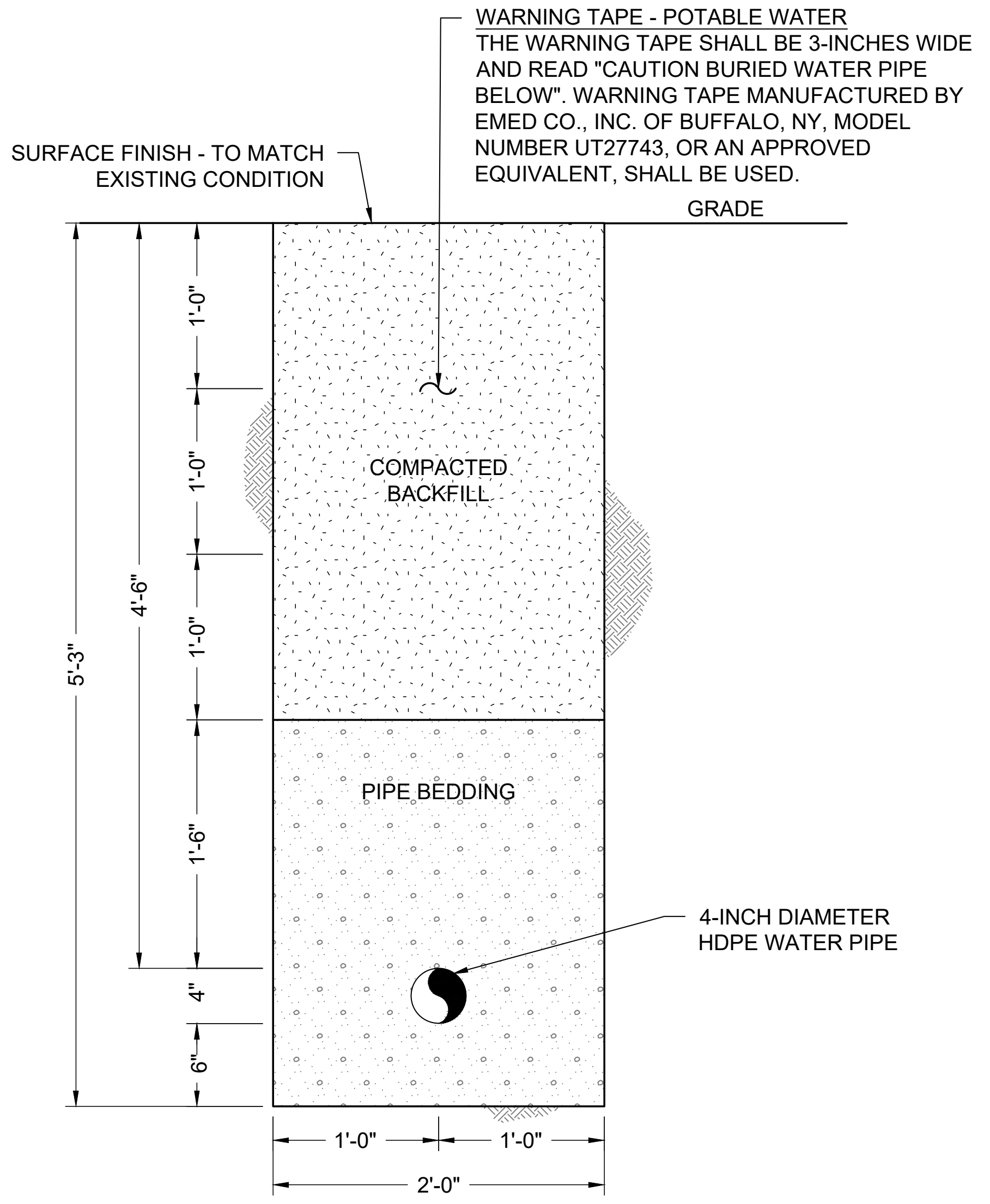

NOTE:
1. THE PIPE BEDDING SHALL BE ASTM CLASS III SAND AND SHALL NOT CONTAIN ANY COBBLES OR GRAVEL AND SHALL BE CLEAN AND FREE OF UNDESIRABLE MATERIAL.

D
4
TRENCH CROSS-SECTION - SINGLE PIPE - RAW WATER
SCALE: 1" = 1'-0"
0 1
SCALE IN FEET

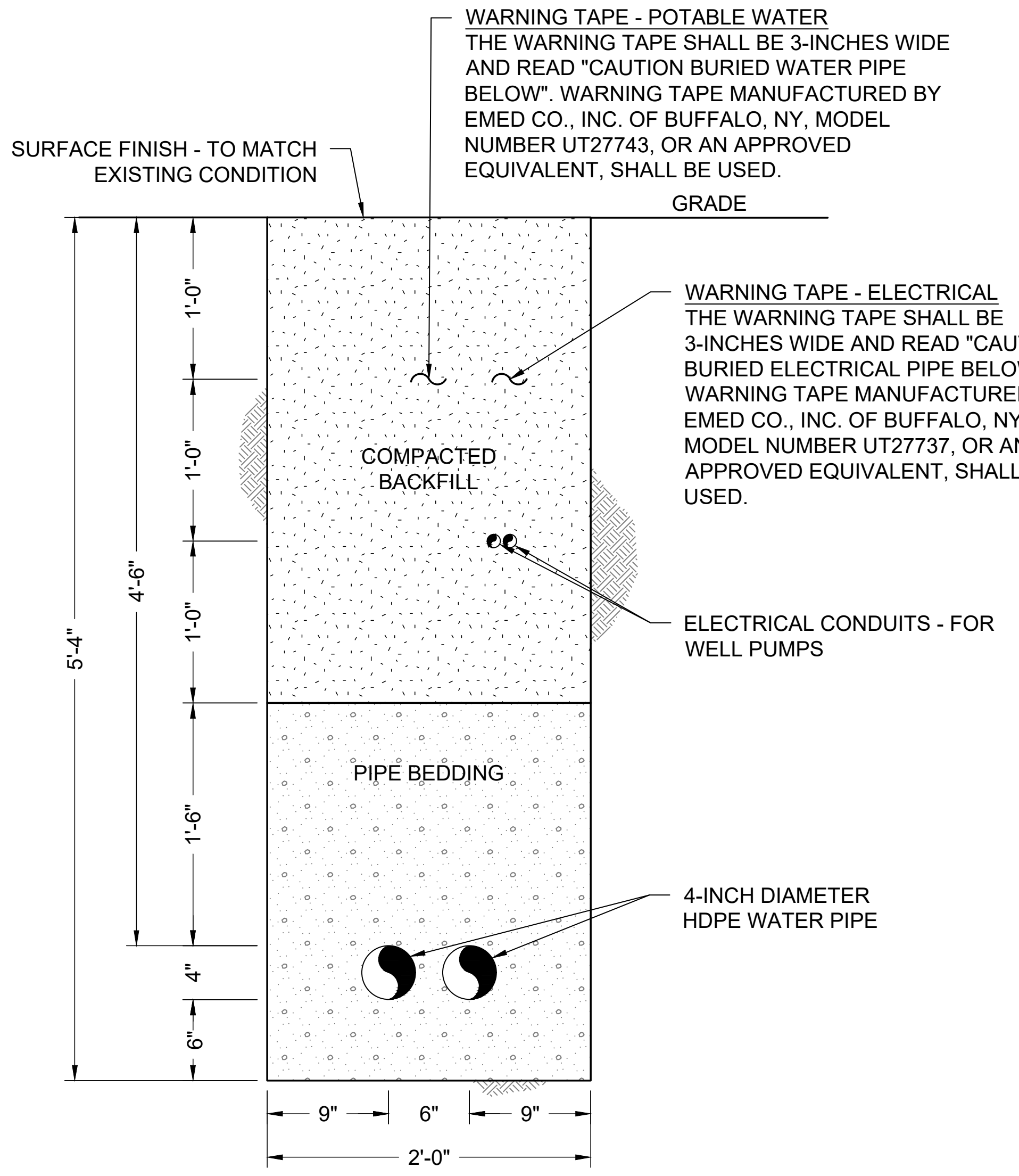

NOTE:
1. THE PIPE BEDDING SHALL BE ASTM CLASS III SAND AND SHALL NOT CONTAIN ANY COBBLES OR GRAVEL AND SHALL BE CLEAN AND FREE OF UNDESIRABLE MATERIAL.

E
4
TRENCH CROSS-SECTION - DOUBLE PIPE - RAW WATER
SCALE: 1" = 1'-0"
0 1
SCALE IN FEET

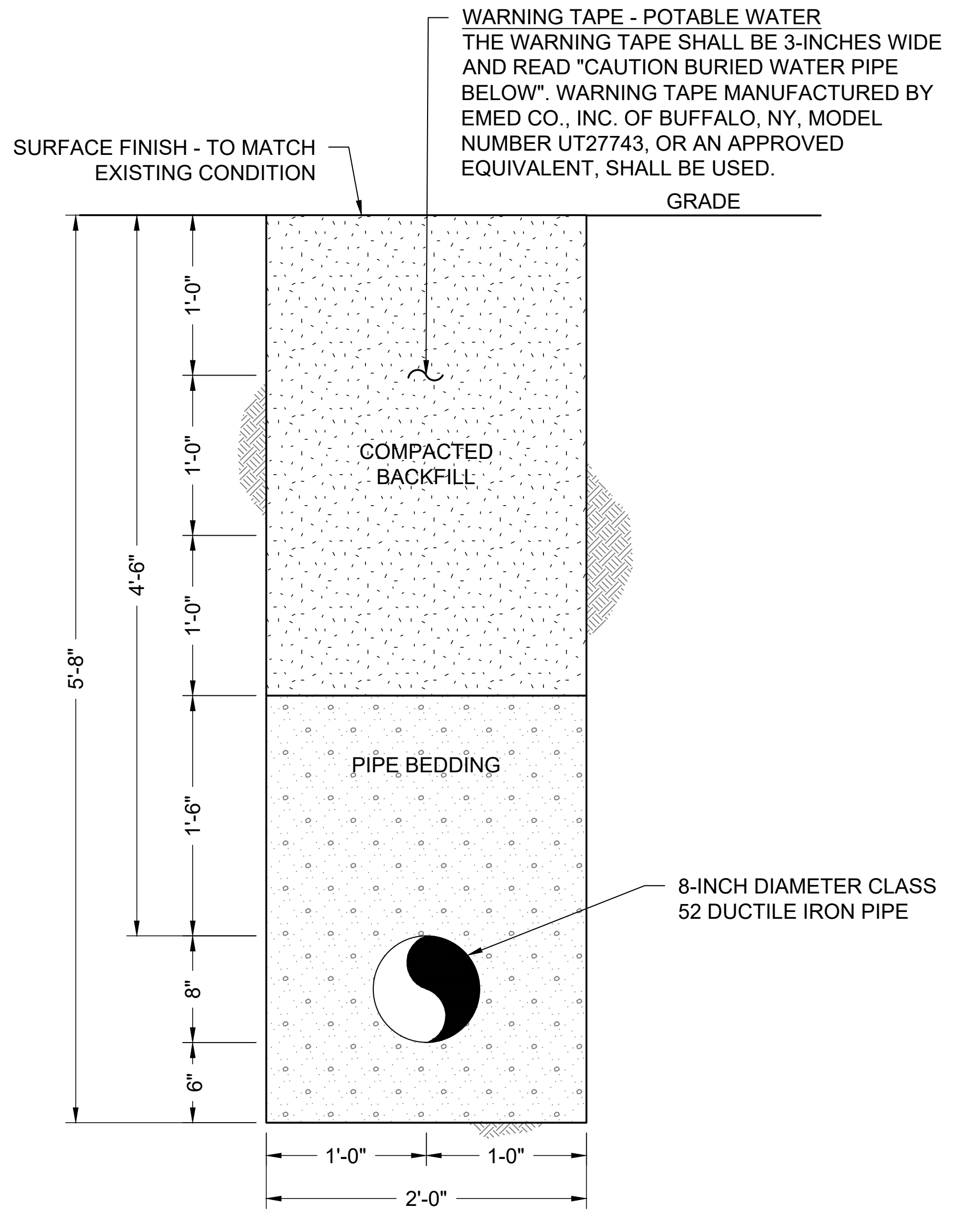

NOTE:
1. THE PIPE BEDDING SHALL BE ASTM CLASS III SAND AND SHALL NOT CONTAIN ANY COBBLES OR GRAVEL AND SHALL BE CLEAN AND FREE OF UNDESIRABLE MATERIAL.

F
4
TRENCH CROSS-SECTION - SINGLE PIPE - TREATED WATER
SCALE: 1" = 1'-0"
0 1
SCALE IN FEET

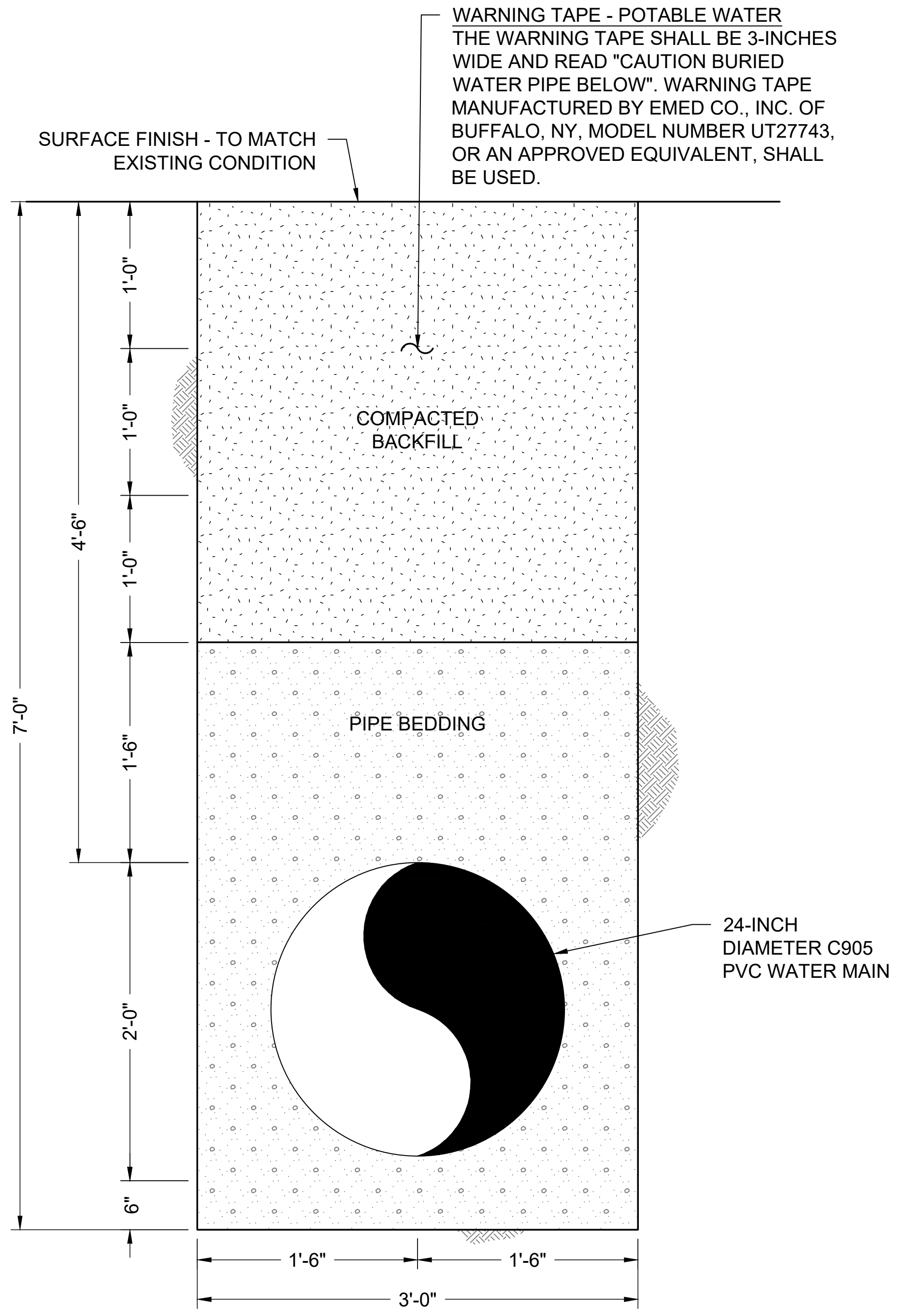

NOTE:
1. THE PIPE BEDDING SHALL BE ASTM CLASS III SAND AND SHALL NOT CONTAIN ANY COBBLES OR GRAVEL AND SHALL BE CLEAN AND FREE OF UNDESIRABLE MATERIAL.

G
4
TRENCH CROSS-SECTION - SINGLE PIPE - OVERSIZED WATER MAIN
SCALE: 1" = 1'-0"
0 1
SCALE IN FEET

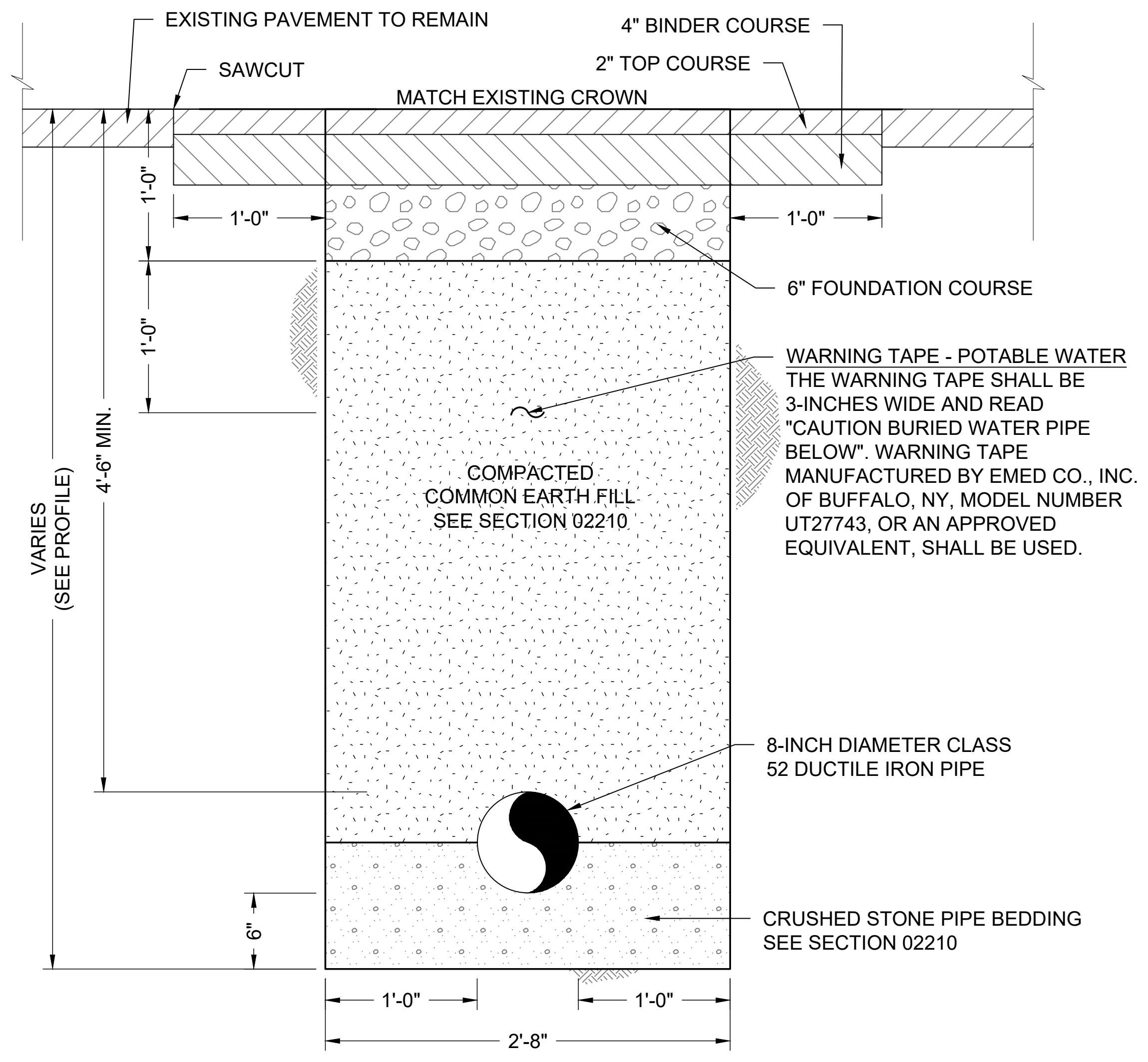

H
4
TRENCH CROSS-SECTION - SINGLE PIPE - DISTRIBUTION SYSTEM
SCALE: 1" = 1'-0"
0 1
SCALE IN FEET

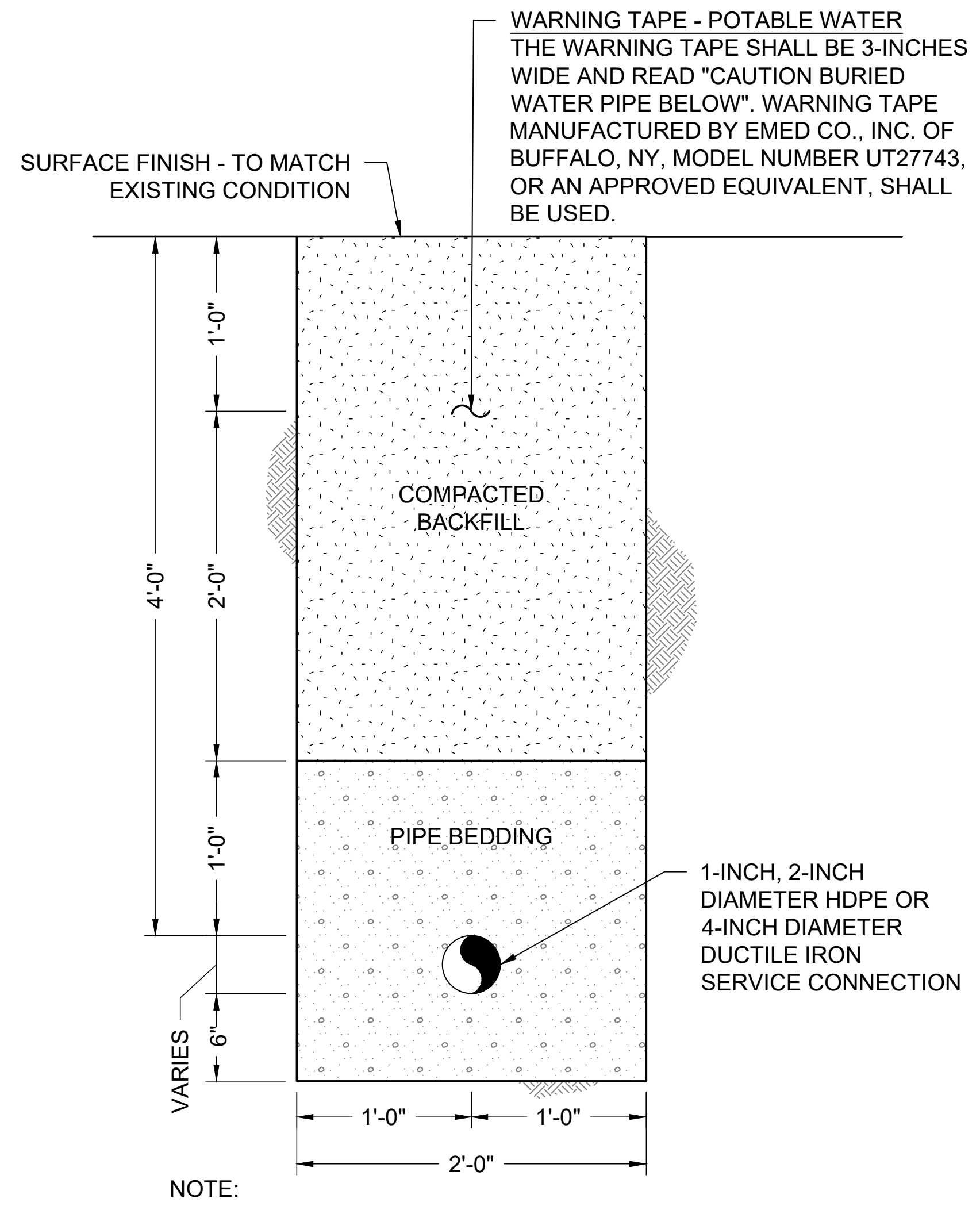

NOTE:
1. THE PIPE BEDDING SHALL BE ASTM CLASS III SAND AND SHALL NOT CONTAIN ANY COBBLES OR GRAVEL AND SHALL BE CLEAN AND FREE OF UNDESIRABLE MATERIAL.

I
4
TRENCH CROSS-SECTION - SINGLE PIPE - SERVICE CONNECTION
SCALE: 1" = 1'-0"
0 1
SCALE IN FEET

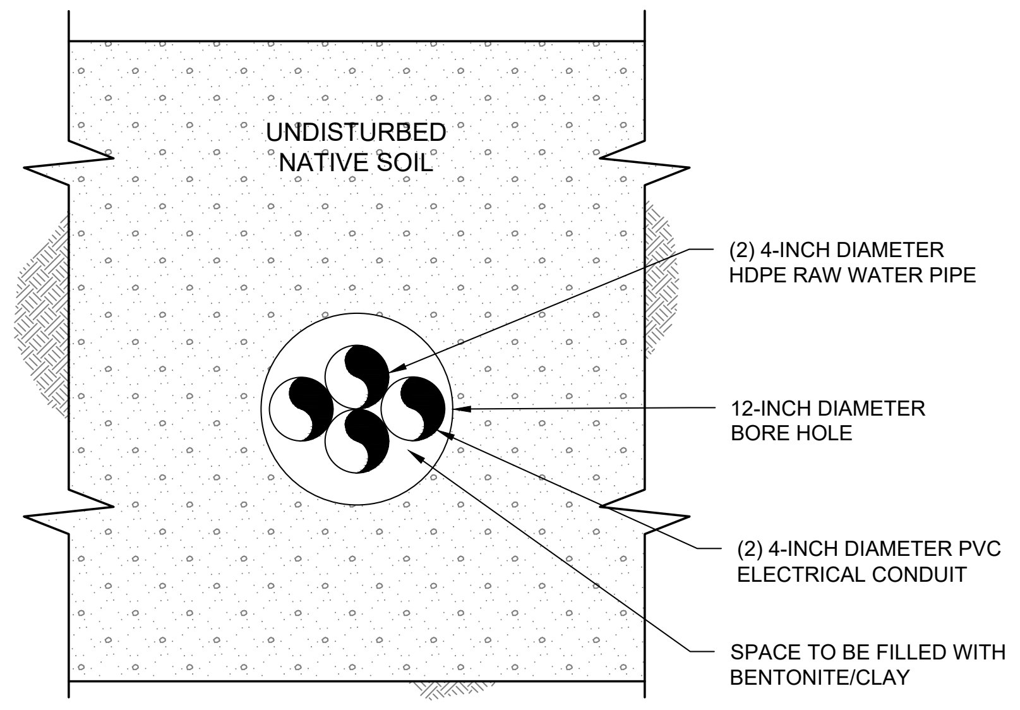

J
4
DIRECTIONAL DRILL - WELL #1 & Well #6A
RAW WATER BORE HOLE
SCALE: 1" = 1'-0"
0 1
SCALE IN FEET

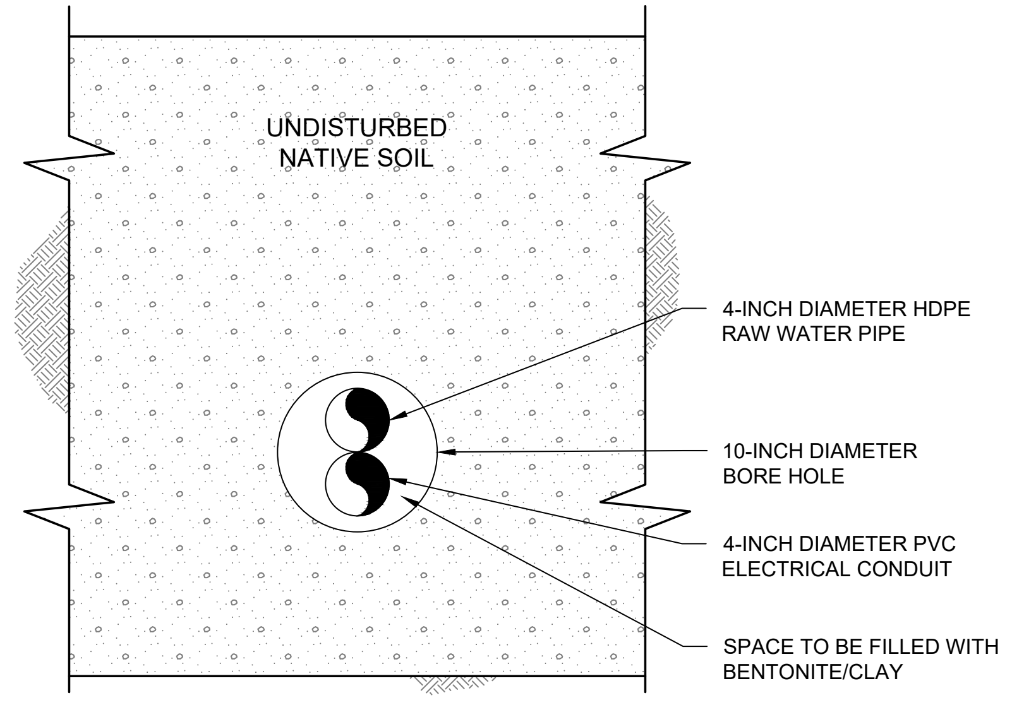

K
4
DIRECTIONAL DRILL - WELL #3
RAW WATER BORE HOLE
SCALE: 1" = 1'-0"
0 1
SCALE IN FEET

REVISIONS

REV	DESCRIPTION
A	Chkd: Revised: Appr.:
A	Chkd: Revised: Appr.:
A	Chkd: Revised: Appr.:

SEAL

DATE

DRAWN BY	RAC
CHECKED	MS
APPROVED	SR
DRAWING DATE	08/16/22

PROPERTY OF WSP USA
IMPORTANT: THIS DRAWING PRINT IS LOANED FOR MUTUAL ASSISTANCE AND AS SUCH IS SUBJECT TO RECALL AT ANY TIME. INFORMATION CONTAINED HEREON IS NOT TO BE DISCLOSED OR REPRODUCED IN ANY FORM FOR THE BENEFIT OF PARTIES OTHER THAN NECESSARY SUBCONTRACTORS AND SUPPLIERS WITHOUT THE WRITTEN CONSENT OF WSP USA

NOTICE: THIS DRAWING HAS BEEN PREPARED UNDER THE DIRECTION OF A LICENSED PROFESSIONAL ENGINEER, IT IS A VIOLATION OF ARTICLE 130 OF THE NEW YORK STATE EDUCATION LAW FOR ANY PERSON TO ALTER THIS DOCUMENT IN ANY WAY WITHOUT THE EXPRESS WRITTEN VERIFICATION OR ADOPTION BY A NEW YORK STATE LICENSED LAND SURVEYOR OR ENGINEER IN ACCORDANCE WITH SECTION 7209 (2), ARTICLE 130, NEW YORK STATE EDUCATION LAW.

WELL SETTINGS AND PIPING DETAILS

Summit Club Residential
568 Bedford Road (Route 22)
Town of North Castle, New York

WSP USA Inc.
6 Research Drive, Suite 260
Shelton, Connecticut 06484
(203) 929-8555

6 of 11

Sheet Number
4

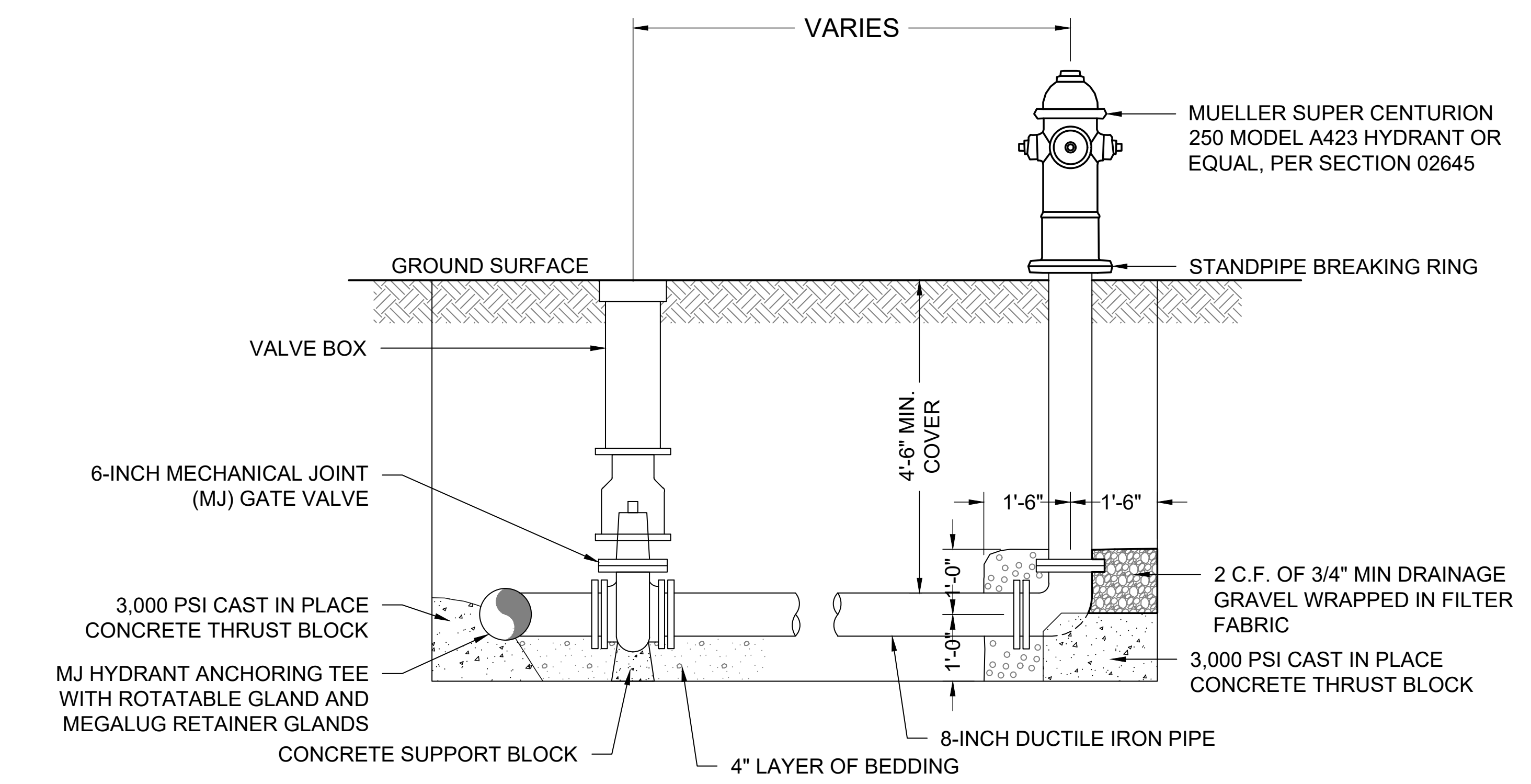

NOTES:

1. HYDRANT DRAINS SHOULD REMAIN PLUGGED WHEN GROUNDWATER IS ENCOUNTERED 2 FEET OR LESS BELOW THE BASE OF THE HYDRANT.
2. WHEN HYDRANT DRAINS ARE NOT PLUGGED, A GRAVEL POCKET OR DRY WELL SHALL BE PROVIDED UNLESS THE NATURAL SOILS WILL PROVIDE ADEQUATE DRAINAGE.
3. HYDRANT DRAINS SHALL NOT BE CONNECTED TO OR LOCATED WITHIN 10 FEET OF SANITARY SEWERS, STORM SEWERS, OR STORM DRAINS.
4. APPROXIMATE SIGNAGE MUST BE PERMANENTLY AFFIXED TO HYDRANT CITING REQUIREMENTS TO PUMP THE HYDRANT BARREL DRY AFTER USE TO PREVENT DAMAGE DURING FREEZING WEATHER.

A
5
HYDRANT DETAIL - TYPICAL
NOT TO SCALE

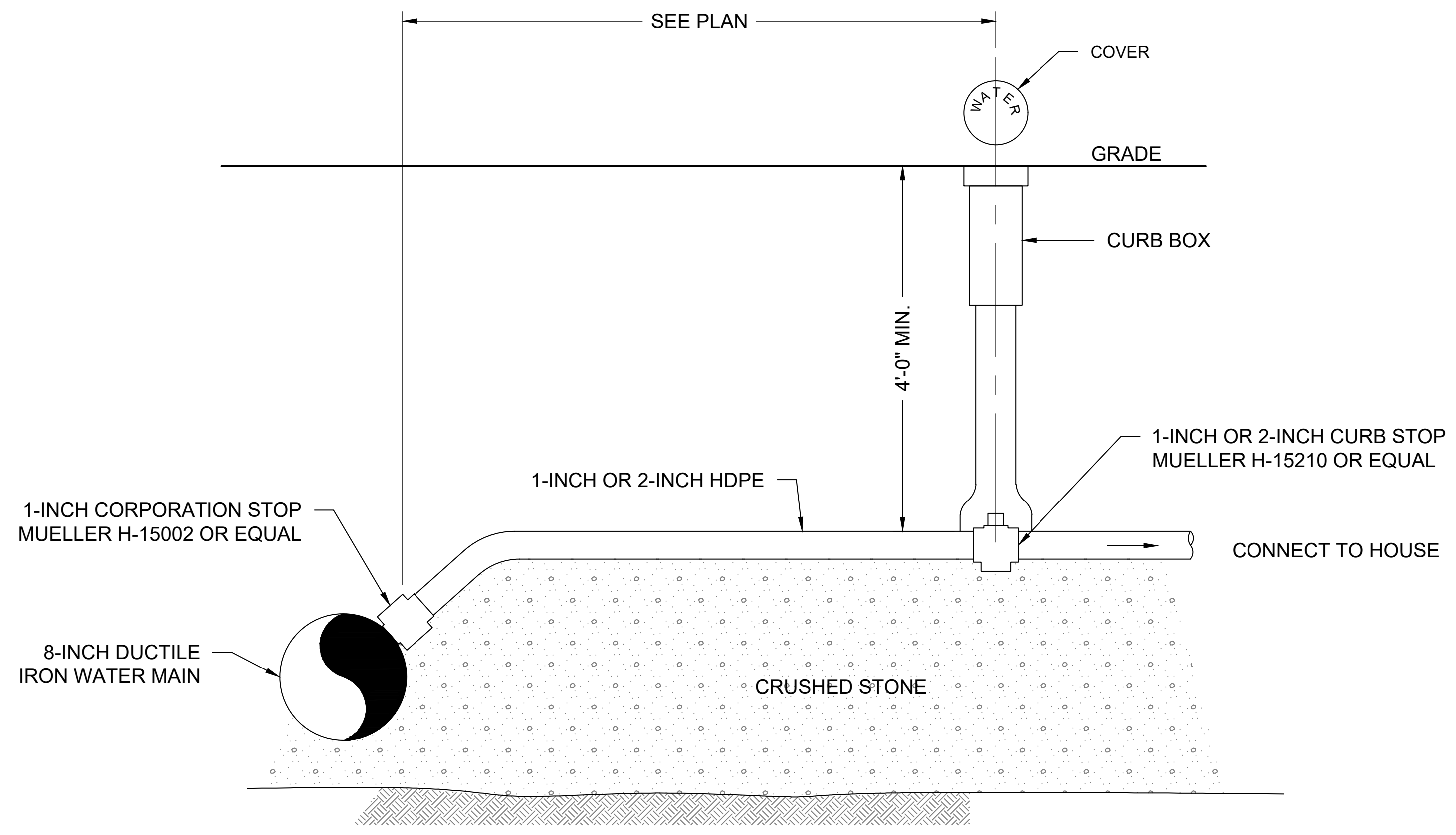

B
5
1-INCH TAP DETAIL (BY OTHERS)
NOT TO SCALE

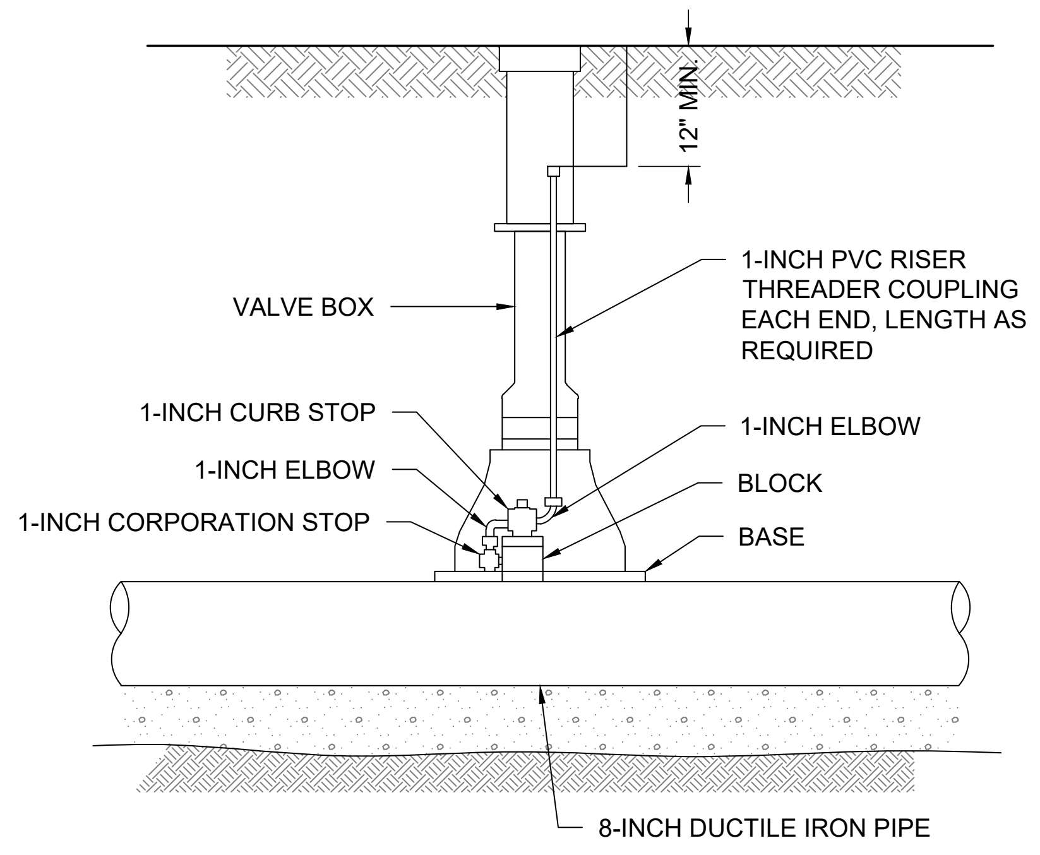

C
5
HAND OPERATED AIR RELEASE VALVE ASSEMBLY DETAIL
NOT TO SCALE

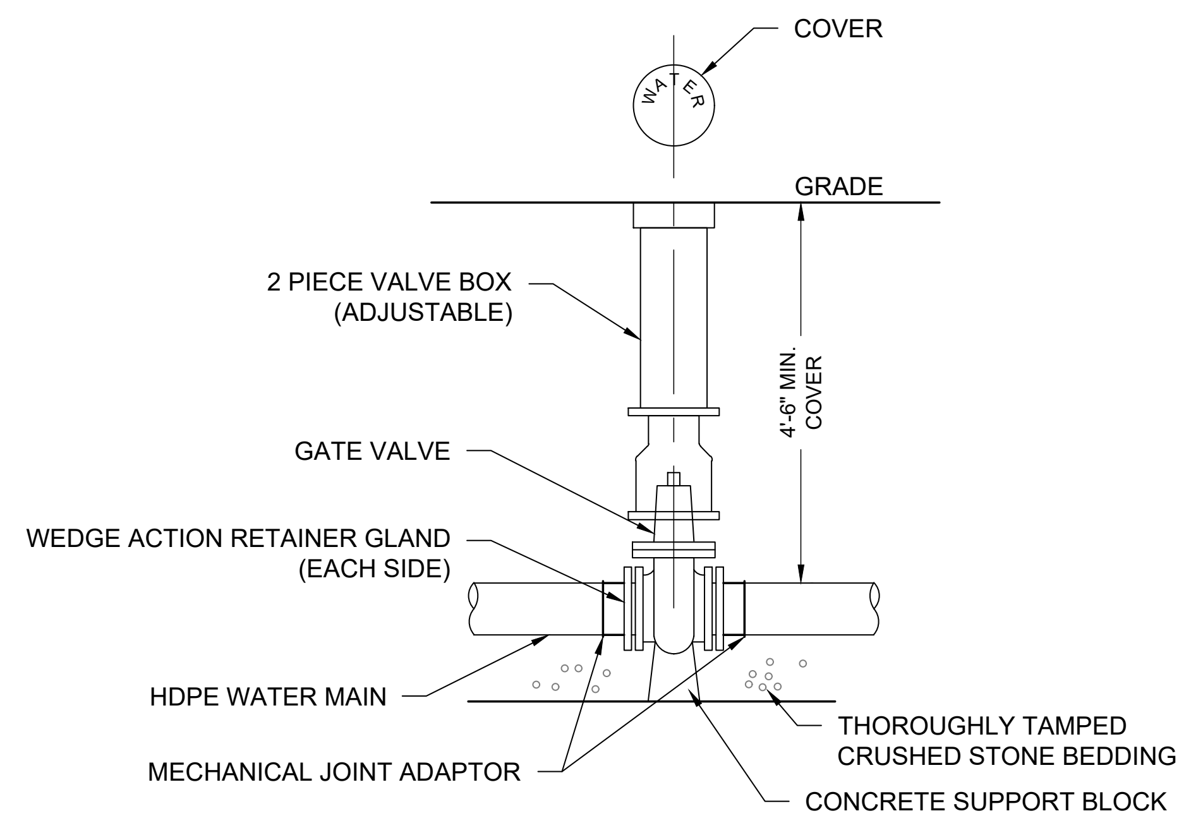

D
5
VALVE DETAIL - TYPICAL, BURIED
NOT TO SCALE

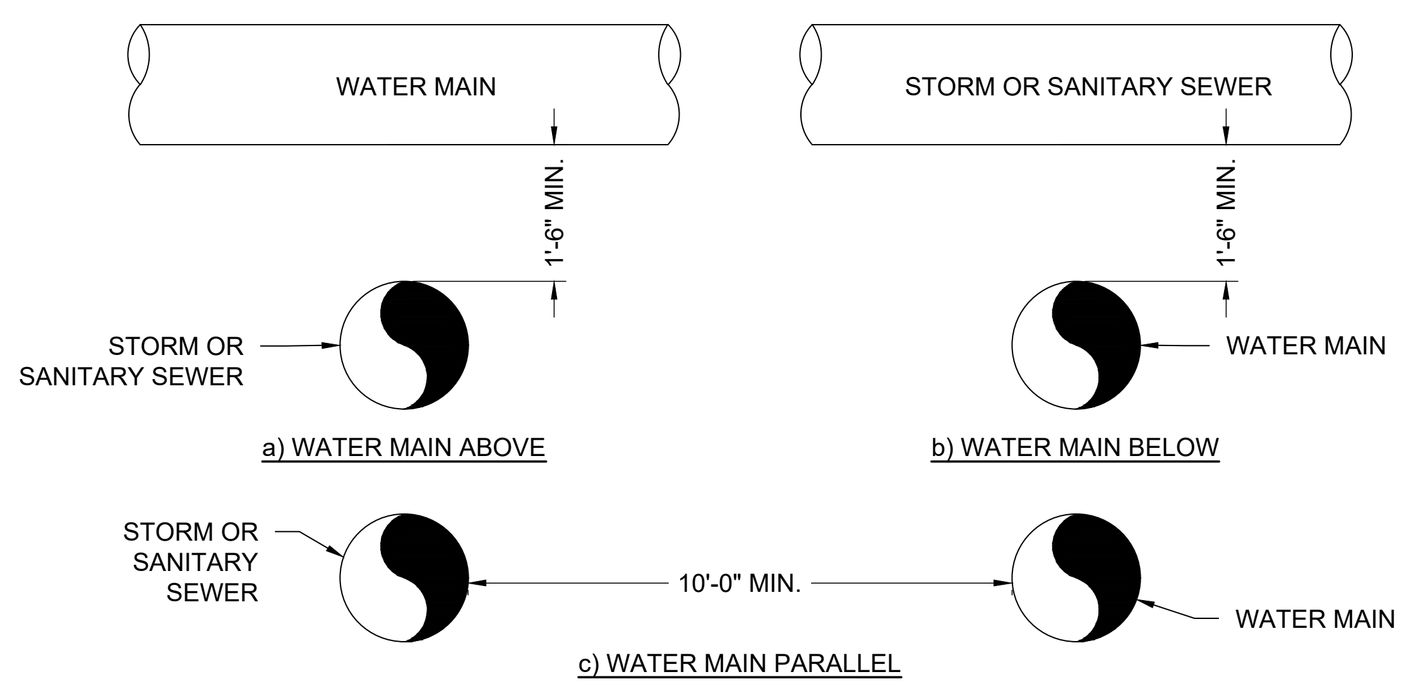

a) WATER MAIN ABOVE

b) WATER MAIN BELOW

c) WATER MAIN PARALLEL

NOTE:
AT CROSSINGS, ONE FULL LENGTH OF WATER PIPE SHALL BE LOCATED SO BOTH JOINTS WILL BE AS FAR FROM THE SEWER AS POSSIBLE. SPECIAL STRUCTURAL SUPPORT FOR THE WATER AND SEWER PIPES MAY BE REQUIRED.

E
5
PIPING SEPARATION DETAIL -
PIPE CROSSING AND PARALLEL PIPE INSTALLATION
NOT TO SCALE

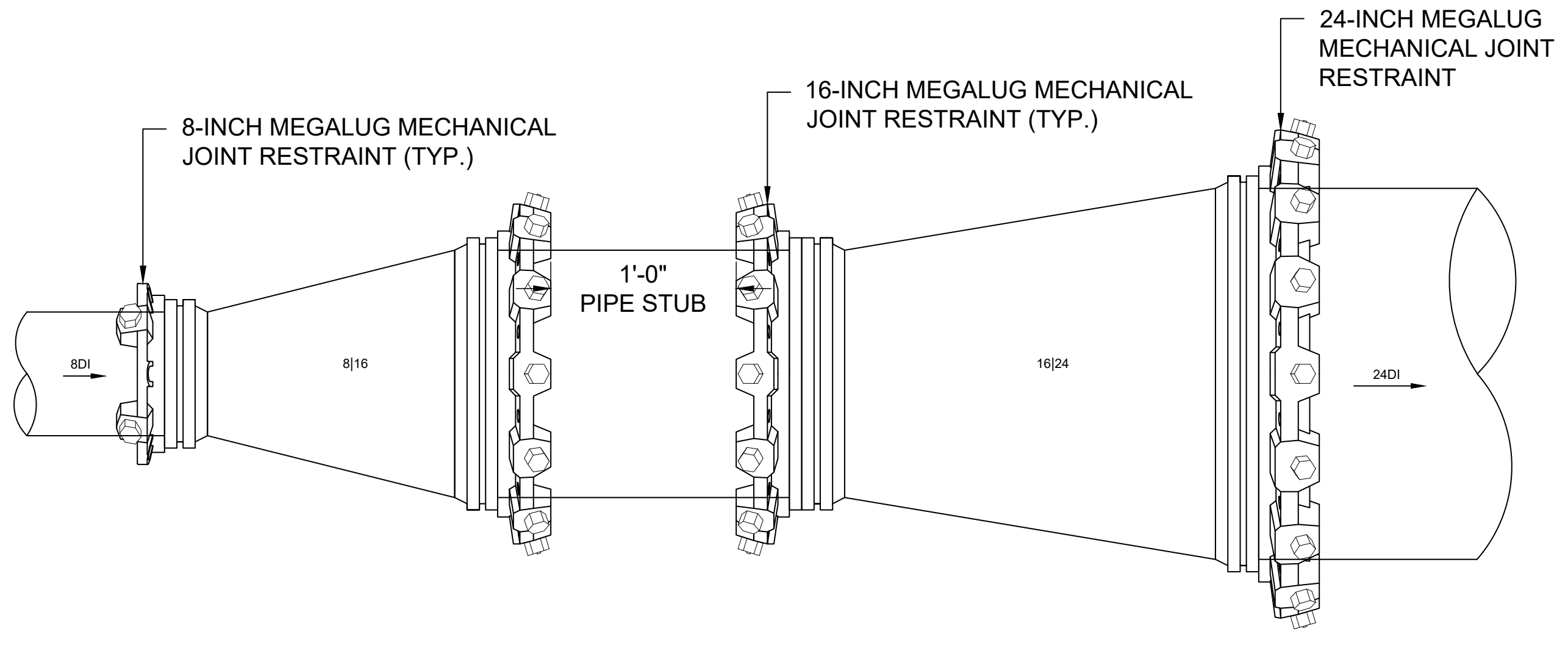

F
5
PROFILE OF TRANSITION FROM 8-INCH TO 24-INCH PIPE
SCALE: 1" = 1'-0"

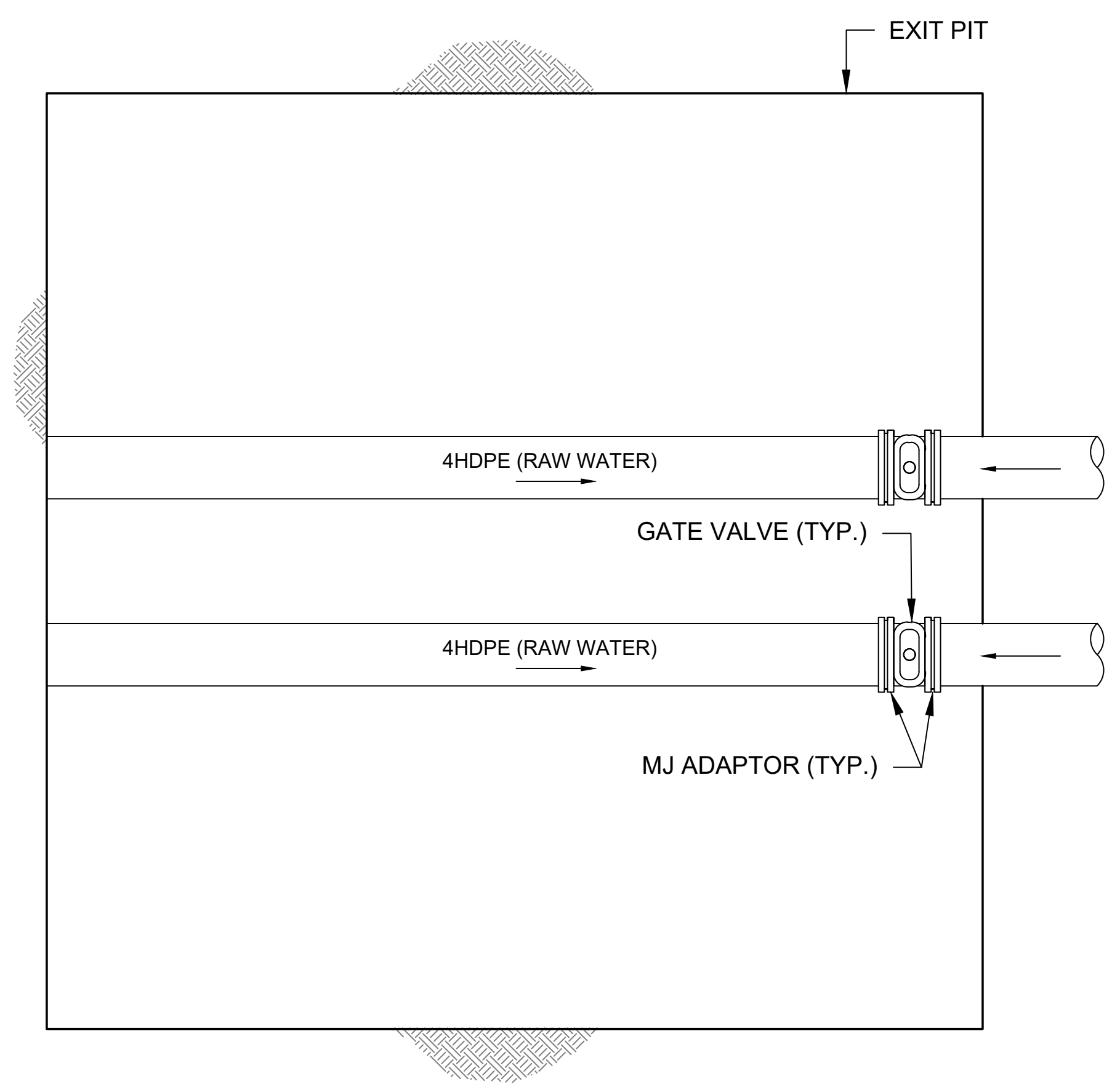

G
5
EXIT PIT - DOUBLE PIPE - WELL #1 & WELL #6A
SCALE: 1" = 1'-0"

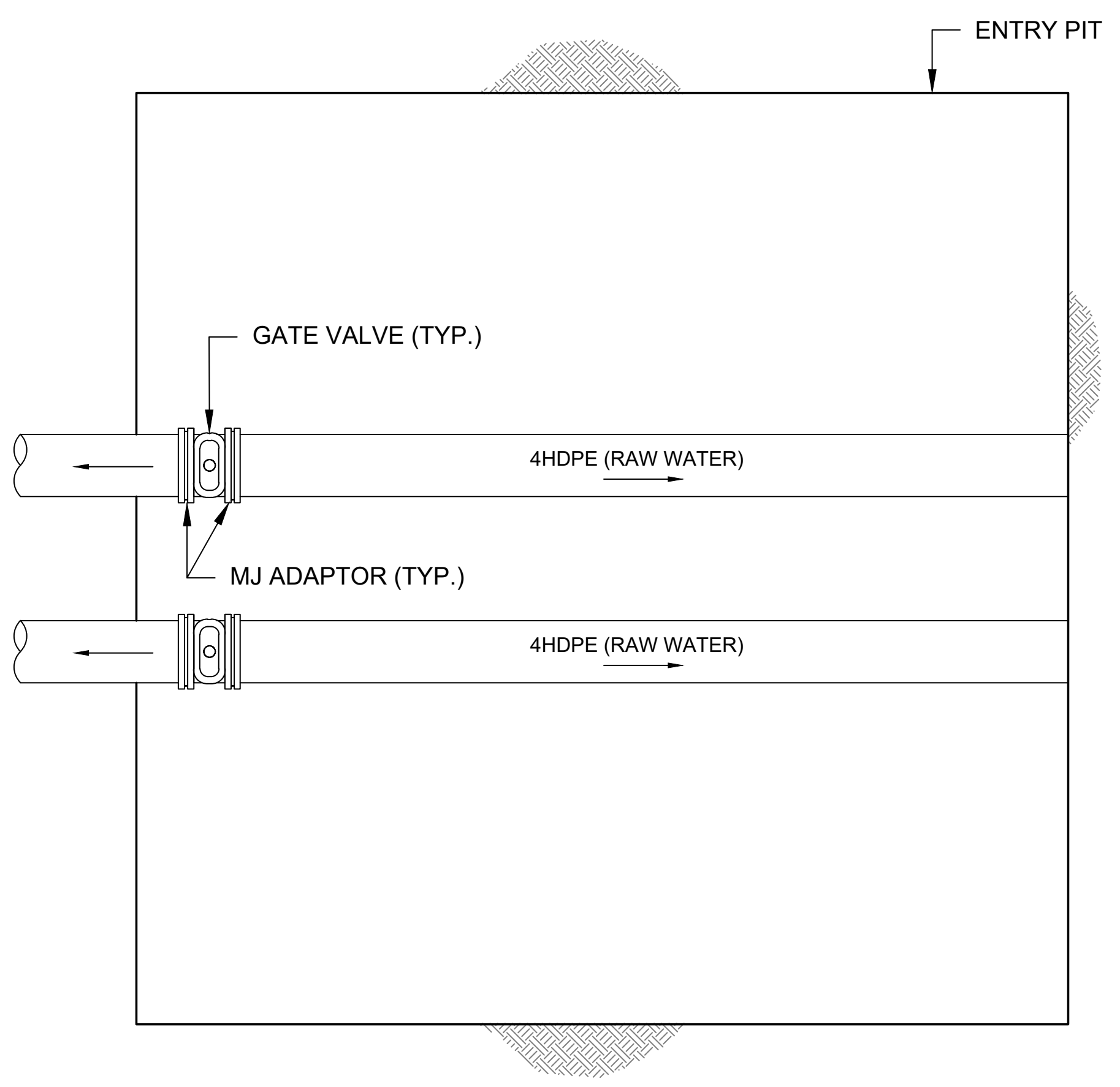

H
5
ENTRY PIT - DOUBLE PIPE - WELL #1 & WELL #6A
SCALE: 1" = 1'-0"

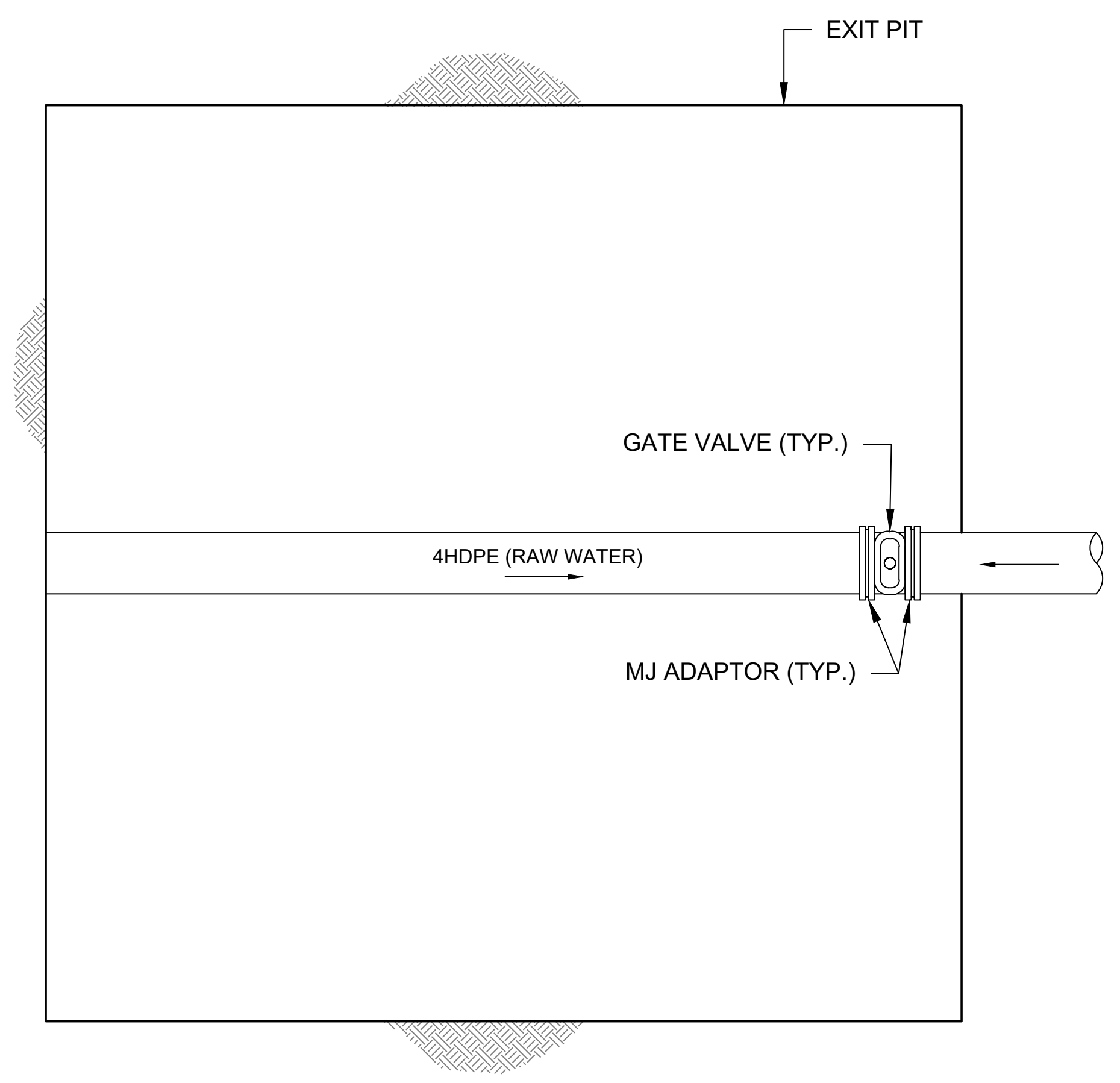

I
5
EXIT PIT - SINGLE PIPE - WELL #3
SCALE: 1" = 1'-0"

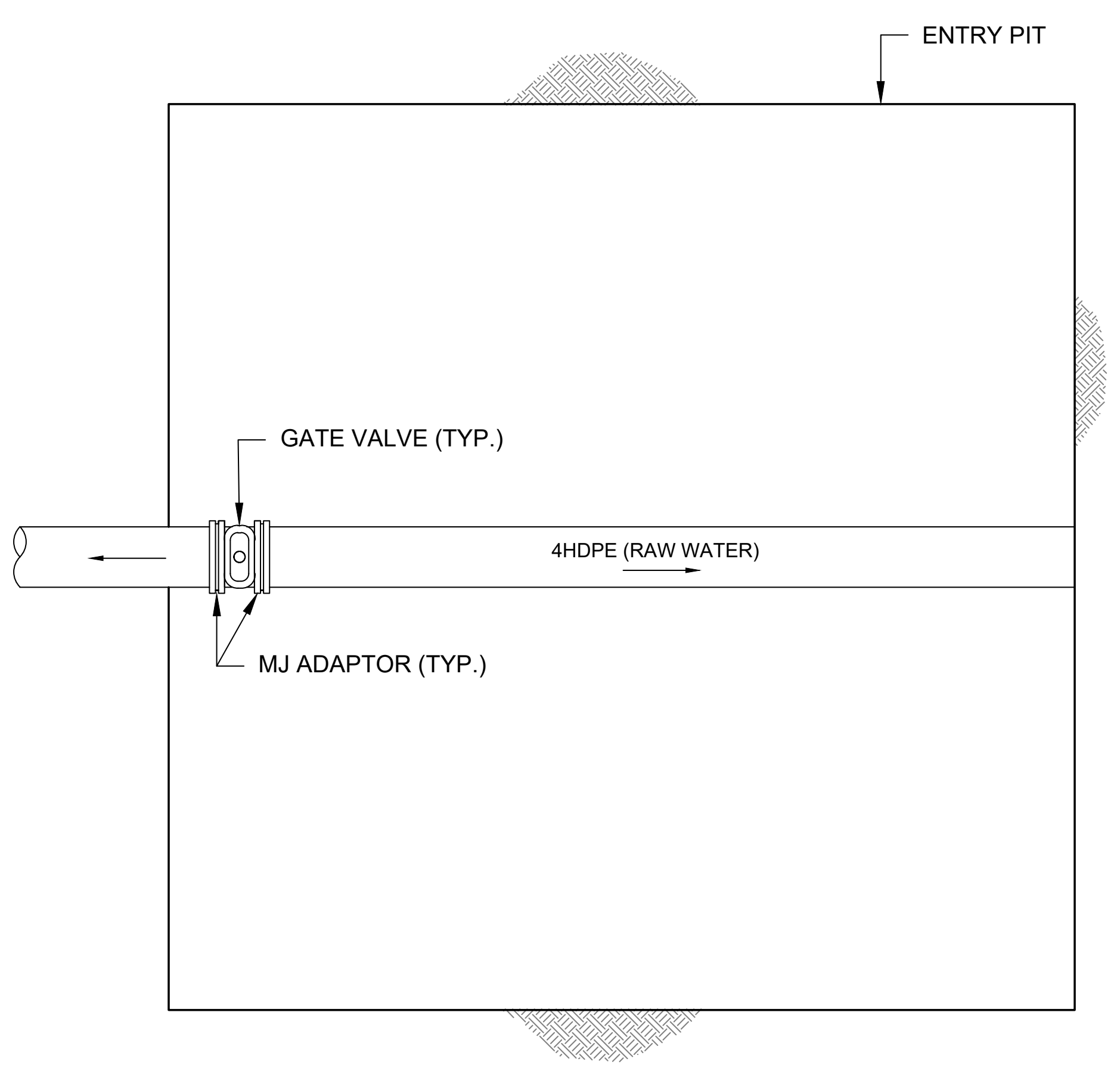

J
5
ENTRY PIT - SINGLE PIPE - WELL #3
SCALE: 1" = 1'-0"

REVISIONS
REV
DESCRIPTION
Revised: Chkd: Appr.:
Revised: Chkd: Appr.:
Revised: Chkd: Appr.:

SEAL

DATE

DRAWN BY RAC
CHECKED MS
APPROVED SR
DRAWING DATE 08/16/22

NOTICE: THIS DRAWING HAS BEEN PREPARED UNDER THE DIRECTION OF A LICENSED PROFESSIONAL ENGINEER, IT IS A VIOLATION OF ARTICLE 130 OF THE NEW YORK STATE EDUCATION LAW FOR ANY PERSON TO ALTER THIS DOCUMENT IN ANY WAY WITHOUT THE EXPRESS WRITTEN VERIFICATION OR ADOPTION BY A NEW YORK STATE LICENSED LAND SURVEYOR OR ENGINEER IN ACCORDANCE WITH SECTION 7209 (2), ARTICLE 130, NEW YORK STATE EDUCATION LAW.

PIPING DETAILS

Summit Club Residential
568 Bedford Road (Route 22)
Town of North Castle, New York

WSP USA Inc.
6 Research Drive, Suite 260
Shelton, Connecticut 06484
(203) 929-8555

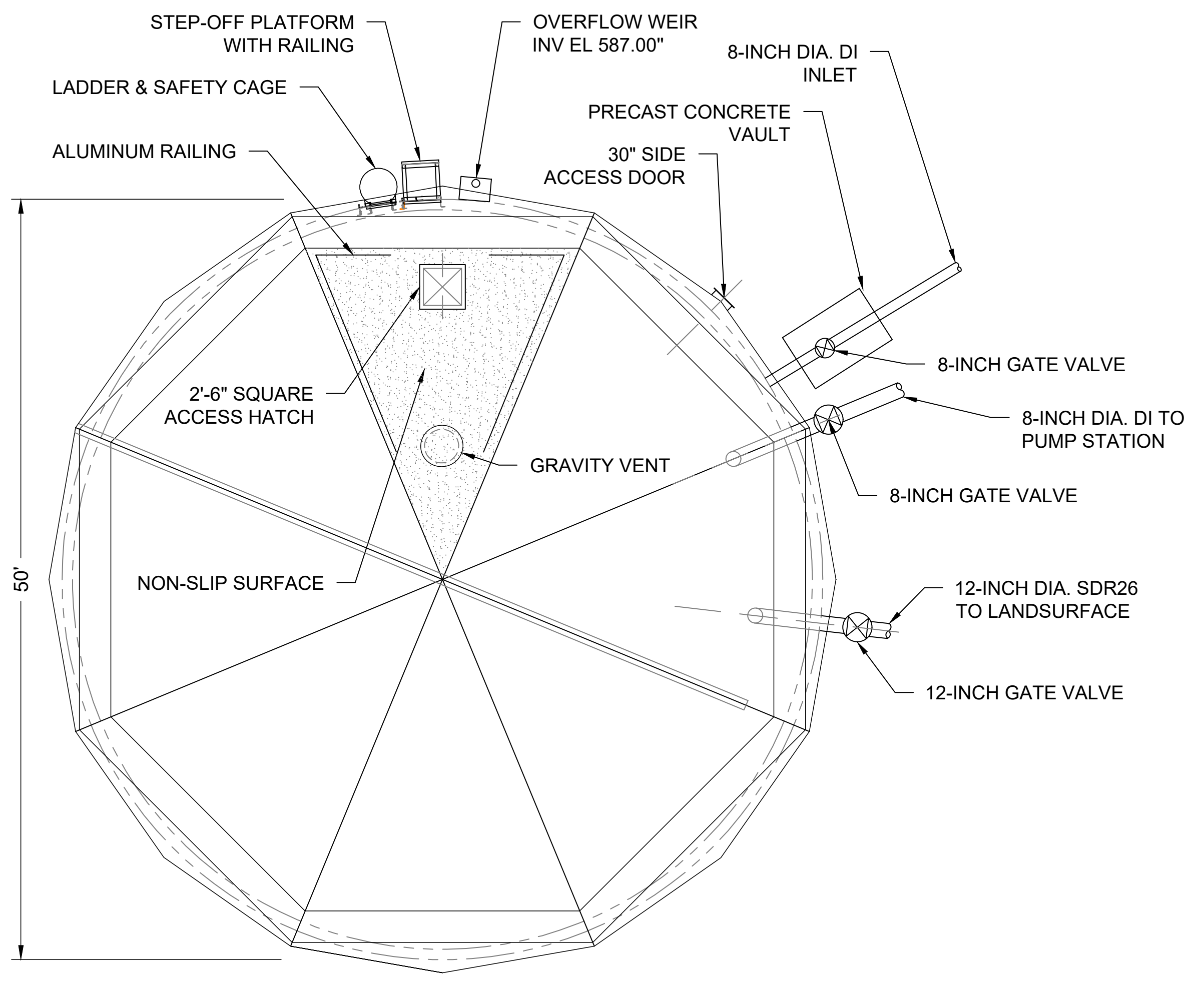

A
11
PLAN VIEW - TANK ROOF
SCALE: 1" = 10'-0"

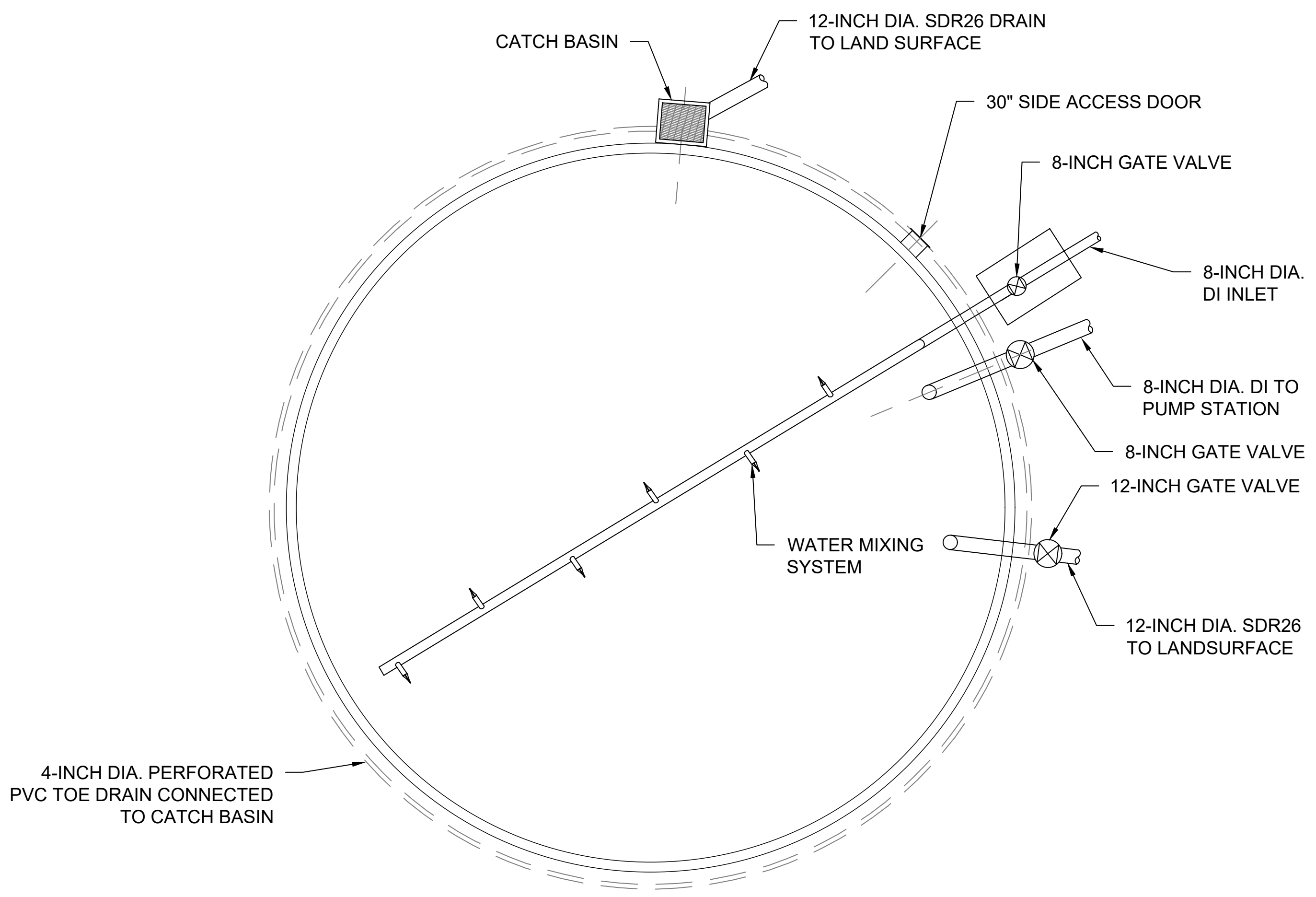

B
11
PLAN VIEW - TANK FLOOR
SCALE: 1" = 10'-0"

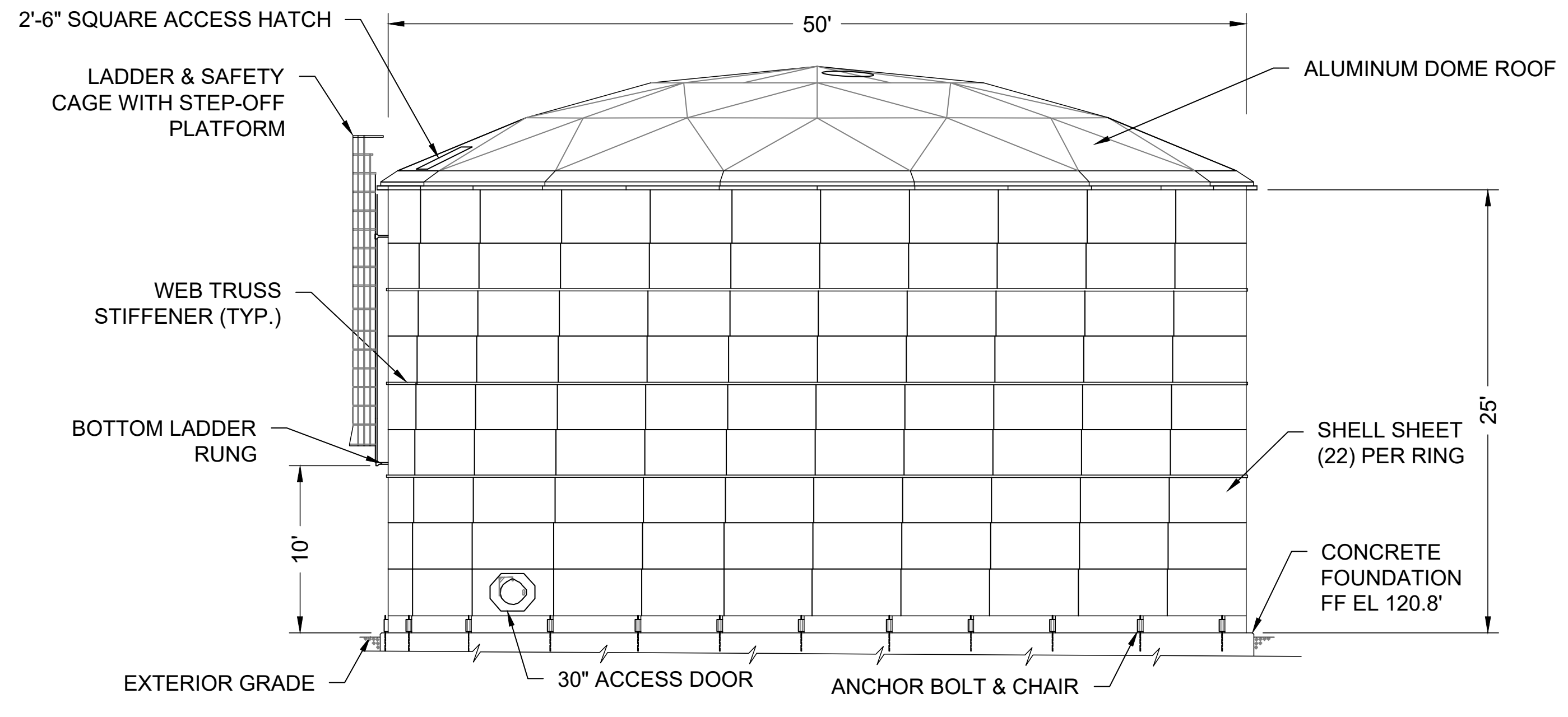

C
11
PROFILE VIEW - TANK
SCALE: 1" = 10'-0"

STORAGE TANK NOTES:

1. TANK SHALL BE GLASS LINED BOLTED STEEL WITH A WORKING CAPACITY OF NO LESS THAN 105,000 GALLONS.
2. THE TANK SHALL HAVE A FINISHED FLOOR ELEVATION OF 563.00'; A HIGH WATER LEVEL AT ELEVATION 587.50'; AND AN OVERFLOW WEIR AT ELEVATION 588.00'.
3. THE CONTRACTOR SHALL PROVIDE PROJECT SPECIFIC TANK DESIGN AND CALCULATIONS DEVELOPED BY THE TANK MANUFACTURER AND SEALED BY A PROFESSIONAL ENGINEER LICENSED IN THE STATE OF NEW YORK. GRAVITY VENT SHALL BE PROVIDED WITH BIRD/INSECT SCREENING AND SHALL MEET THE REQUIREMENTS OF AWWA D103-97 AND AWWA D103-09.
4. THE TANK SHALL BE EQUIPPED WITH A CATHODIC PROTECTION SYSTEM PER TANK MANUFACTURER RECOMMENDATIONS.
5. ROOF ACCESS SHALL INCLUDE 2'-6" SQUARE HATCH OPENING, LADDER WITH SAFETY CAGE, STEP-OFF PLATFORM, SAFETY CABLE, AND ROOF-MOUNTED ALUMINUM PIPE SAFETY RAIL. ALL STEEL COMPONENTS SHALL BE HOT DIP GALVANIZED.
6. THE INFLUENT WATER MIXING SYSTEM SHALL BE A TIDEFLEX MIXING SYSTEM OR APPROVED EQUAL. THE CONTRACTOR SHALL SUBMIT A MIXING AND WATER AGE ANALYSIS PROVIDED BY THE SYSTEM MANUFACTURER FOR REVIEW AND APPROVAL BY THE ENGINEER.

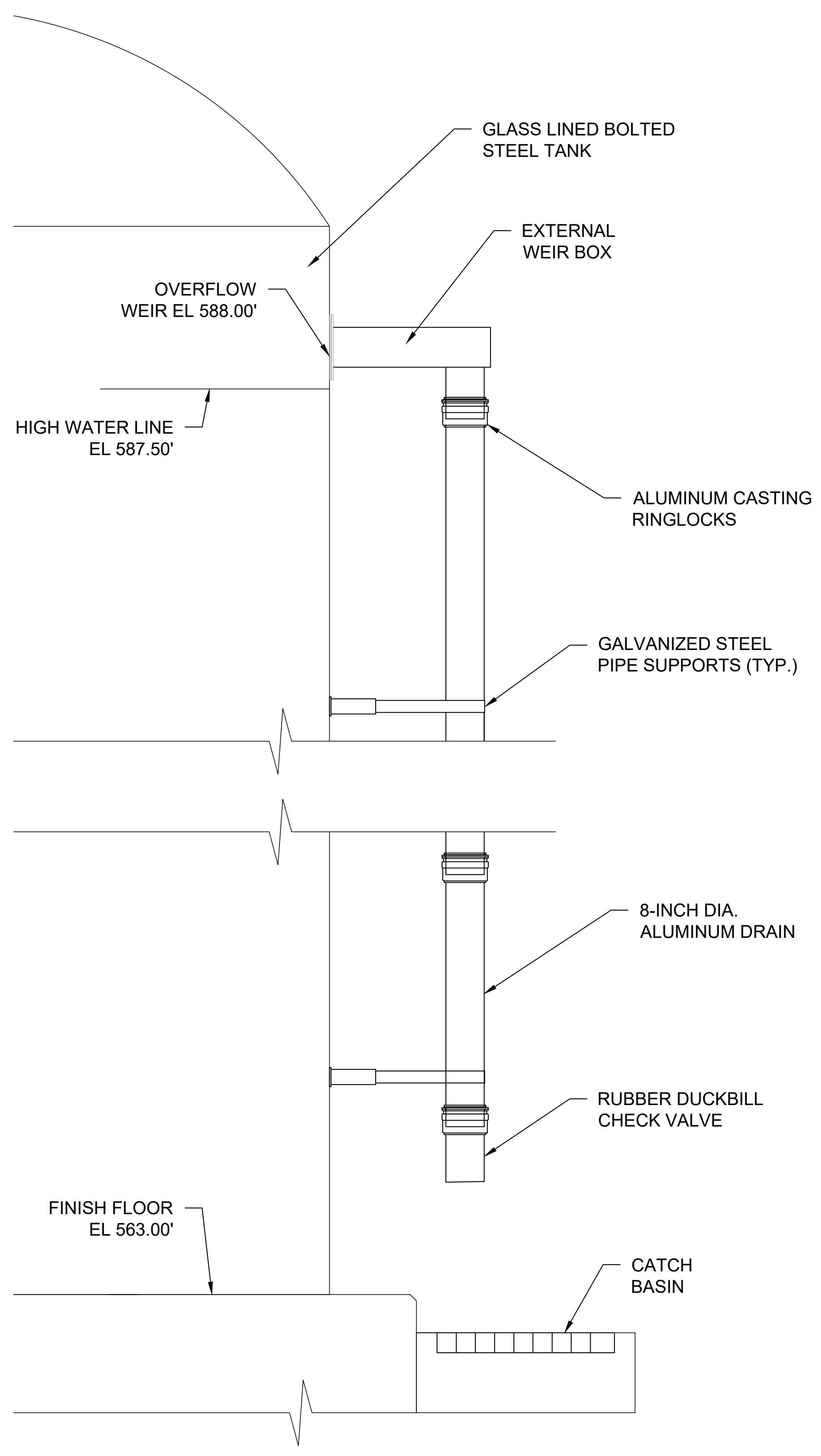

D
11
TANK OVERFLOW WEIR DETAIL
NOT TO SCALE

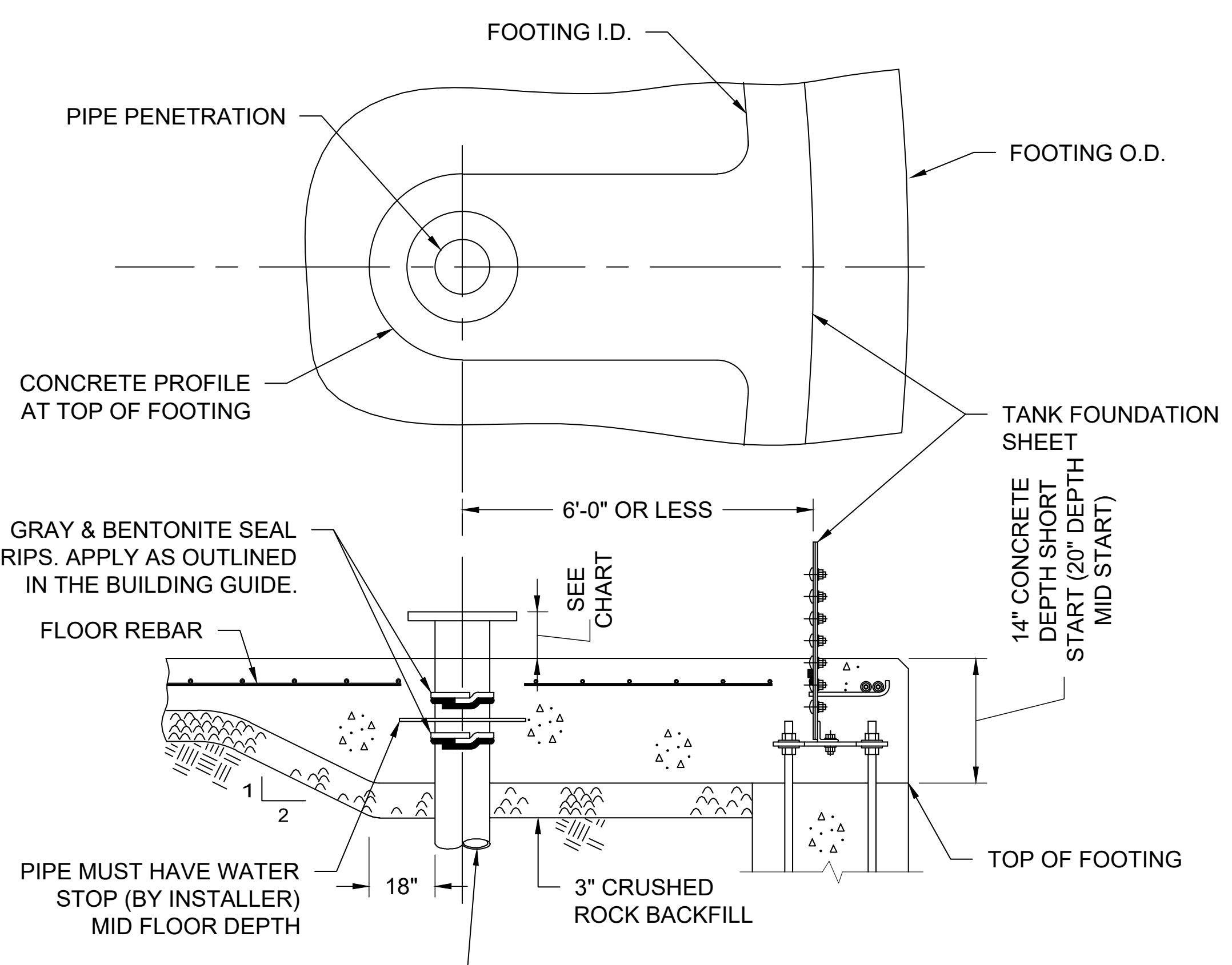

NOTE:
THIS IS A TYPICAL PIPE PENETRATION DETAIL THROUGH THE FOUNDATION FLOOR WHEN THE PIPE IS LOCATED 6'-0" OR LESS FROM THE TANK INSIDE WALL.

SOURCE:
CST STORAGE DRAWING NO. 261342 TYP.

E
11
FLOOR PENETRATION
NOT TO SCALE

PIPE PENETRATION REQUIREMENT
PER SWA/NET OR CONSULTING ENGINEER

VIEW "A" IS DEPICTED	TYPE	QUANTITY EACH
A	MECHANICAL FLANGE 6" ABOVE FLOOR	?
B	PLAIN END 6" ABOVE FLOOR	?
C	PLAIN END FLUSH WITH FLOOR	?

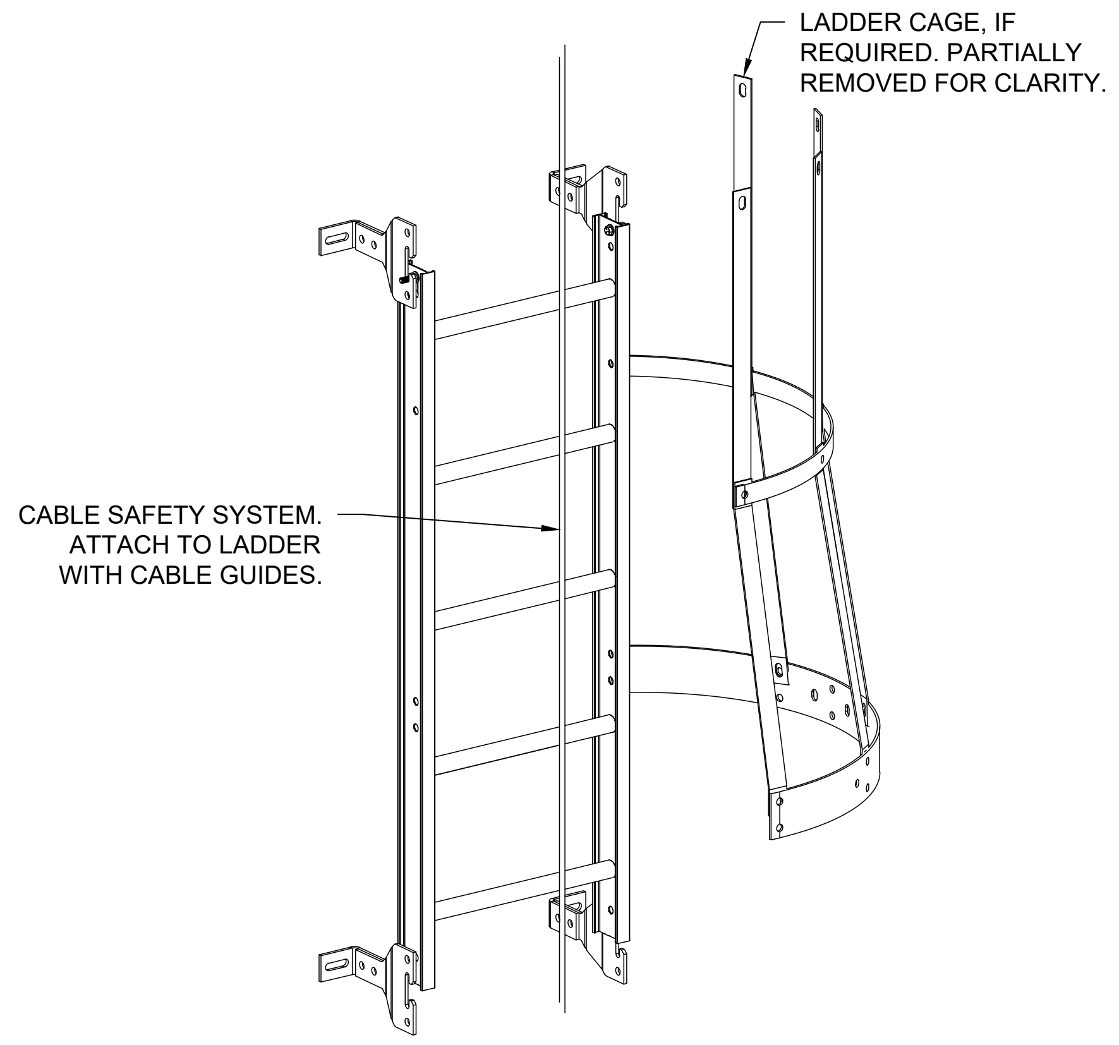

GENERAL NOTES:
1. ALL STEEL COMPONENTS ARE HOT DIP GALVANIZED.
2. LADDER BRACKET ASSEMBLIES ARE SHOWN FOR REFERENCE ONLY. POSITION OF THE BRACKETS TO BE DETERMINED DURING INSTALLATION.

SOURCE:
STATEWIDE AQUA STORE INC. DWG # 291117-MOD2.

F
11
LADDER SECTION WITH CABLE SAFETY SYSTEM
NOT TO SCALE

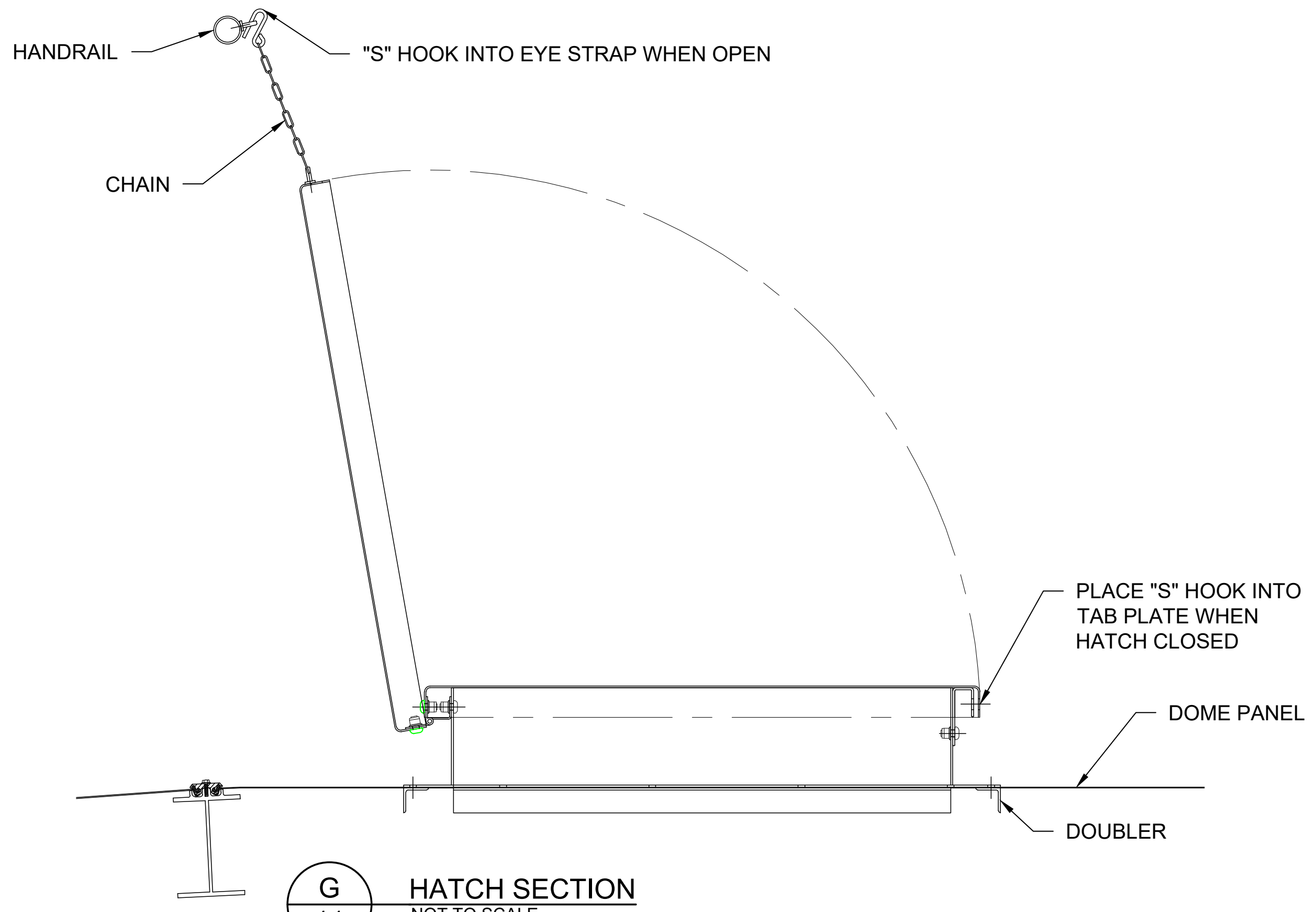

G
11
HATCH SECTION
NOT TO SCALE

D

O:\DWG\Brynwood\Summit Club\Water Supply\P6_TankDetails.dwg, Layout1, 9/29/2022 9:24:40 AM, DWG To PDF.pc3

REVISIONS

REV	DESCRIPTION
1	Revised: Chkd: Appr.:
2	Revised: Chkd: Appr.:
3	Revised: Chkd: Appr.:

SEAL

DATE

DRAWN BY RAC
CHECKED MS
APPROVED SR
DRAWING DATE 08/17/22

PROPERTY OF WSP USA
IMPORTANT: THIS DRAWING PRINT IS LOANED FOR MUTUAL ASSISTANCE AND AS SUCH IS SUBJECT TO RECALL AT ANY TIME. INFORMATION CONTAINED HEREON IS NOT TO BE DISCLOSED OR REPRODUCED IN ANY FORM FOR THE BENEFIT OF PARTIES OTHER THAN NECESSARY SUBCONTRACTORS AND SUPPLIERS WITHOUT THE WRITTEN CONSENT OF WSP USA

NOTICE: THIS DRAWING HAS BEEN PREPARED UNDER THE DIRECTION OF A LICENSED PROFESSIONAL ENGINEER, IT IS A VIOLATION OF ARTICLE 130 OF THE NEW YORK STATE EDUCATION LAW FOR ANY PERSON TO ALTER THIS DOCUMENT IN ANY WAY WITHOUT THE EXPRESS WRITTEN VERIFICATION OR ADOPTION BY A NEW YORK STATE LICENSED LAND SURVEYOR OR ENGINEER IN ACCORDANCE WITH SECTION 7209 (2), ARTICLE 130, NEW YORK STATE EDUCATION LAW.

205,000-GALLON ABOVE GRADE POTABLE WATER
ATMOSPHERIC STORAGE TANK DETAILS

Summit Club Residential
568 Bedford Road (Route 22)
Town of North Castle, New York

WSP USA Inc.
6 Research Drive, Suite 260
Shelton, Connecticut 06484
(203) 929-8555

8 of 11

Sheet Number
6

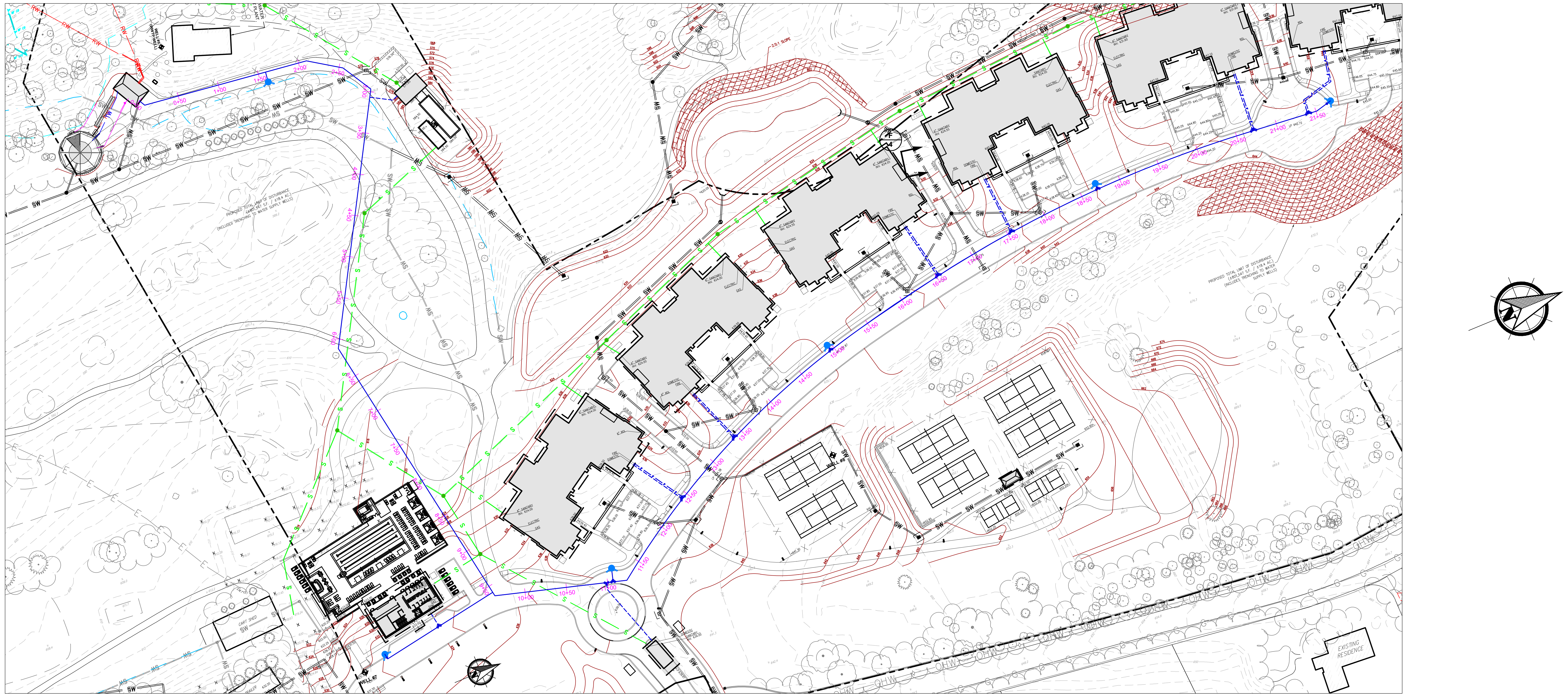

PLAN VIEW
SCALE: 1" = 80'

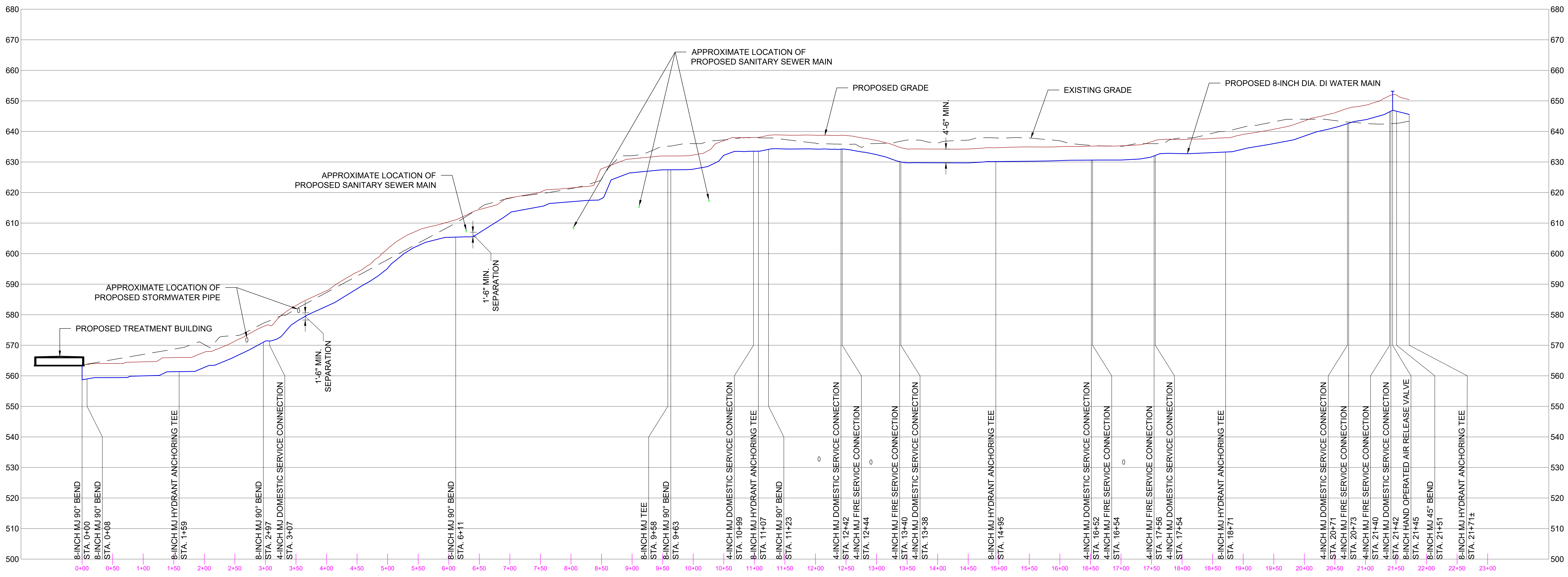

PROFILE VIEW
VERTICAL SCALE: 1" = 20'
HORIZONTAL SCALE: 1" = 100'

LEGEND

— · — · —	PROPERTY BOUNDARY
— · W 632 · —	EXISTING FLAGGED WETLAND BOUNDARY
— · — · —	EXISTING WETLAND BUFFER
—— 560 ——	EXISTING CONTOUR
—— 674 ——	PROPOSED CONTOUR
◈	EXISTING WELL
—— E —— E ——	EXISTING ELECTRICAL LINE
—— G —— G ——	EXISTING GAS LINE
—— SW —— SW ——	EXISTING STORMWATER PIPE
—— S —— S ——	EXISTING SANITARY SEWER MAIN
—— SW —— SW ——	PROPOSED STORMWATER PIPE
—— S —— S ——	PROPOSED SANITARY SEWER MAIN
————	PROPOSED 8-INCH DIA. DUCTILE IRON WATER MAIN
- - - - -	PROPOSED 4-INCH DIA. DUCTILE IRON DOMESTIC SERVICE CONNECTION
—·—·—·—	PROPOSED 4-INCH DIA. DUCTILE IRON FIRE SERVICE CONNECTION
—— RW —— RW ——	PROPOSED 4-INCH DIA. HDPE RAW WATER PIPE
●	PROPOSED FIRE HYDRANT
9+50	STATION NUMBER

0 20
VERTICAL SCALE IN FEET

0 100
HORIZONTAL SCALE IN FEET

D

SOURCE:
JMC "LAY-GRAD-UTIL_2022-05-11.dwg" EMAILED AUTOCAD FILE.

O:\DWG\Brynwood\Summit Club\Water Supply\P7-8_PlanProfile.dwg, Layout1, 9/29/2022 9:23:46 AM, DWG To PDF.pc3

REVISIONS

REV	DESCRIPTION		
1	Revised:	Chkd:	Appr.:
2	Revised:	Chkd:	Appr.:
3	Revised:	Chkd:	Appr.:

SEAL

DATE

DRAWN BY	RAC
CHECKED	MS
APPROVED	SR
DRAWING DATE	08/17/22

PROPERTY OF WSP USA
IMPORTANT: THIS DRAWING PRINT IS LOANED FOR MUTUAL ASSISTANCE AND AS SUCH IS SUBJECT TO RECALL AT ANY TIME. INFORMATION CONTAINED HEREON IS NOT TO BE DISCLOSED OR REPRODUCED IN ANY FORM FOR THE BENEFIT OF PARTIES OTHER THAN NECESSARY SUBCONTRACTORS AND SUPPLIERS WITHOUT THE WRITTEN CONSENT OF WSP USA

NOTICE: THIS DRAWING HAS BEEN PREPARED UNDER THE DIRECTION OF A LICENSED PROFESSIONAL ENGINEER, IT IS A VIOLATION OF ARTICLE 130 OF THE NEW YORK STATE EDUCATION LAW FOR ANY PERSON TO ALTER THIS DOCUMENT IN ANY WAY WITHOUT THE EXPRESS WRITTEN VERIFICATION OR ADOPTION BY A NEW YORK STATE LICENSED LAND SURVEYOR OR ENGINEER IN ACCORDANCE WITH SECTION 7209 (2), ARTICLE 130, NEW YORK STATE EDUCATION LAW.

DISTRIBUTION SYSTEM PLAN AND PROFILE

Summit Club Residential
568 Bedford Road (Route 22)
Town of North Castle, New York

WSP USA Inc.
6 Research Drive, Suite 260
Shelton, Connecticut 06484
(203) 929-8555

9 of 11

Sheet Number
7

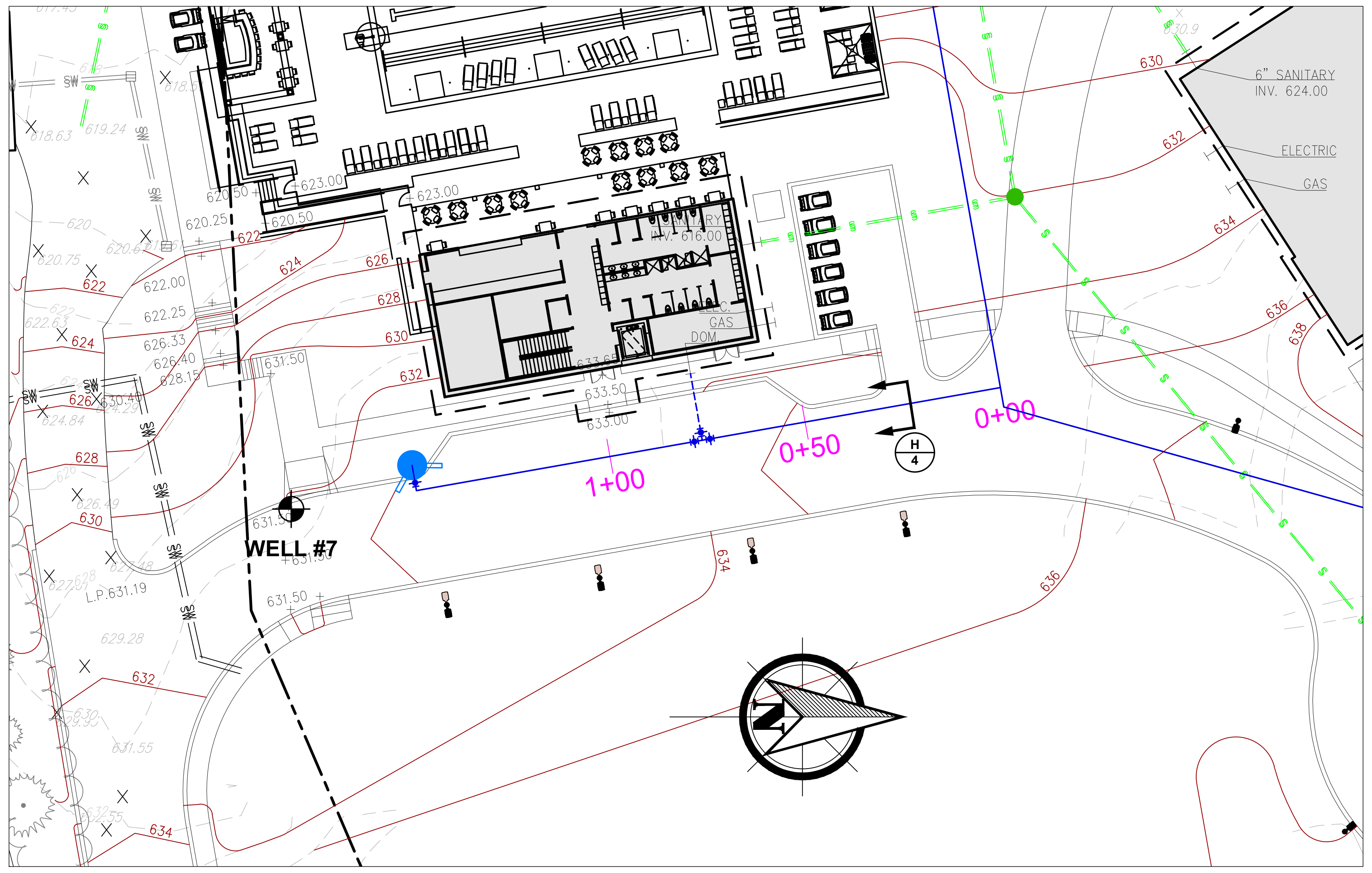

PLAN VIEW
SCALE: 1" = 30'

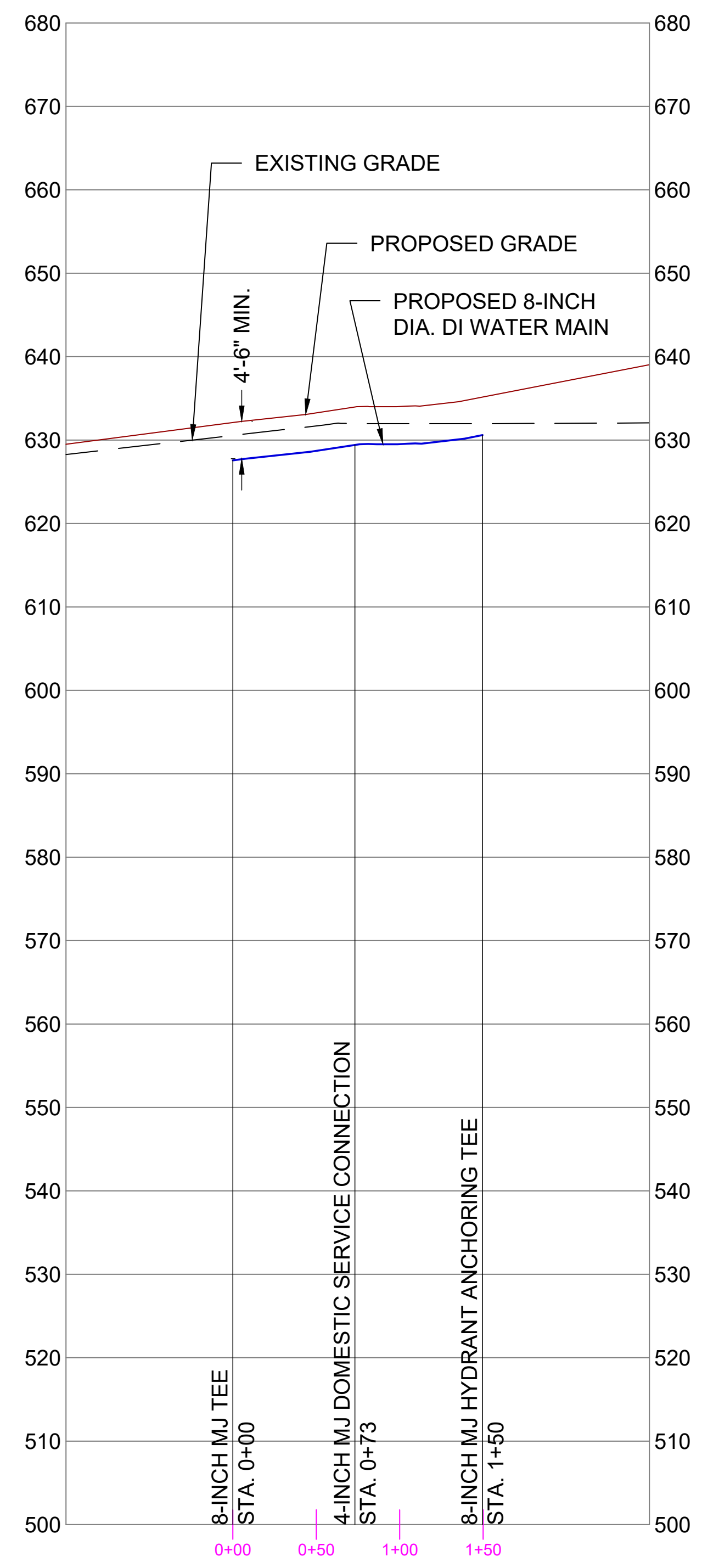

PROFILE VIEW
VERTICAL SCALE: 1" = 20'
HORIZONTAL SCALE: 1" = 100'

LEGEND

	PROPERTY BOUNDARY
WF G12	EXISTING FLAGGED WETLAND BOUNDARY
	EXISTING WETLAND BUFFER
630	EXISTING CONTOUR
636	PROPOSED CONTOUR
⊕	EXISTING WELL
E E	EXISTING ELECTRICAL LINE
G G	EXISTING GAS LINE
SW SW	EXISTING STORMWATER PIPE
S S	EXISTING SANITARY SEWER MAIN
SW SW	PROPOSED STORMWATER PIPE
§ §	PROPOSED SANITARY SEWER MAIN
	PROPOSED 8-INCH DIA. DUCTILE IRON WATER MAIN
	PROPOSED 4-INCH DIA. DUCTILE IRON DOMESTIC SERVICE CONNECTION
	PROPOSED 4-INCH DIA. DUCTILE IRON FIRE SERVICE CONNECTION
RW RW	PROPOSED 4-INCH DIA. HDPE RAW WATER PIPE
	PROPOSED FIRE HYDRANT
0+00	STATION NUMBER

0 20
VERTICAL SCALE IN FEET

0 100
HORIZONTAL SCALE IN FEET

D

SOURCE:
JMC "LAY-GRAD-UTIL_2022-05-11.dwg" EMAILED AUTOCAD FILE.

O:\DWG\Brynwood\Summit Club\Water Supply\P7-8_PlanProfile.dwg, Layout2, 9/29/2022 9:19:19 AM, DWG To PDF.pc3

REVISIONS

REV	DESCRIPTION
1	Revised: Chkd: Appr.:
2	Revised: Chkd: Appr.:
3	Revised: Chkd: Appr.:

SEAL

DATE

DRAWN BY	RAC
CHECKED	MS
APPROVED	SR
DRAWING DATE	08/17/22

PROPERTY OF WSP USA
IMPORTANT: THIS DRAWING PRINT IS LOANED FOR MUTUAL ASSISTANCE AND AS SUCH IS SUBJECT TO RECALL AT ANY TIME. INFORMATION CONTAINED HEREON IS NOT TO BE DISCLOSED OR REPRODUCED IN ANY FORM FOR THE BENEFIT OF PARTIES OTHER THAN NECESSARY SUBCONTRACTORS AND SUPPLIERS WITHOUT THE WRITTEN CONSENT OF WSP USA

NOTICE: THIS DRAWING HAS BEEN PREPARED UNDER THE DIRECTION OF A LICENSED PROFESSIONAL ENGINEER, IT IS A VIOLATION OF ARTICLE 130 OF THE NEW YORK STATE EDUCATION LAW FOR ANY PERSON TO ALTER THIS DOCUMENT IN ANY WAY WITHOUT THE EXPRESS WRITTEN VERIFICATION OR ADOPTION BY A NEW YORK STATE LICENSED LAND SURVEYOR OR ENGINEER IN ACCORDANCE WITH SECTION 7209 (2), ARTICLE 130, NEW YORK STATE EDUCATION LAW.

DISTRIBUTION SYSTEM PLAN AND PROFILE

Summit Club Residential
568 Bedford Road (Route 22)
Town of North Castle, New York

WSP USA Inc.
6 Research Drive, Suite 260
Shelton, Connecticut 06484
(203) 929-8555

10 of 11

Sheet Number
8

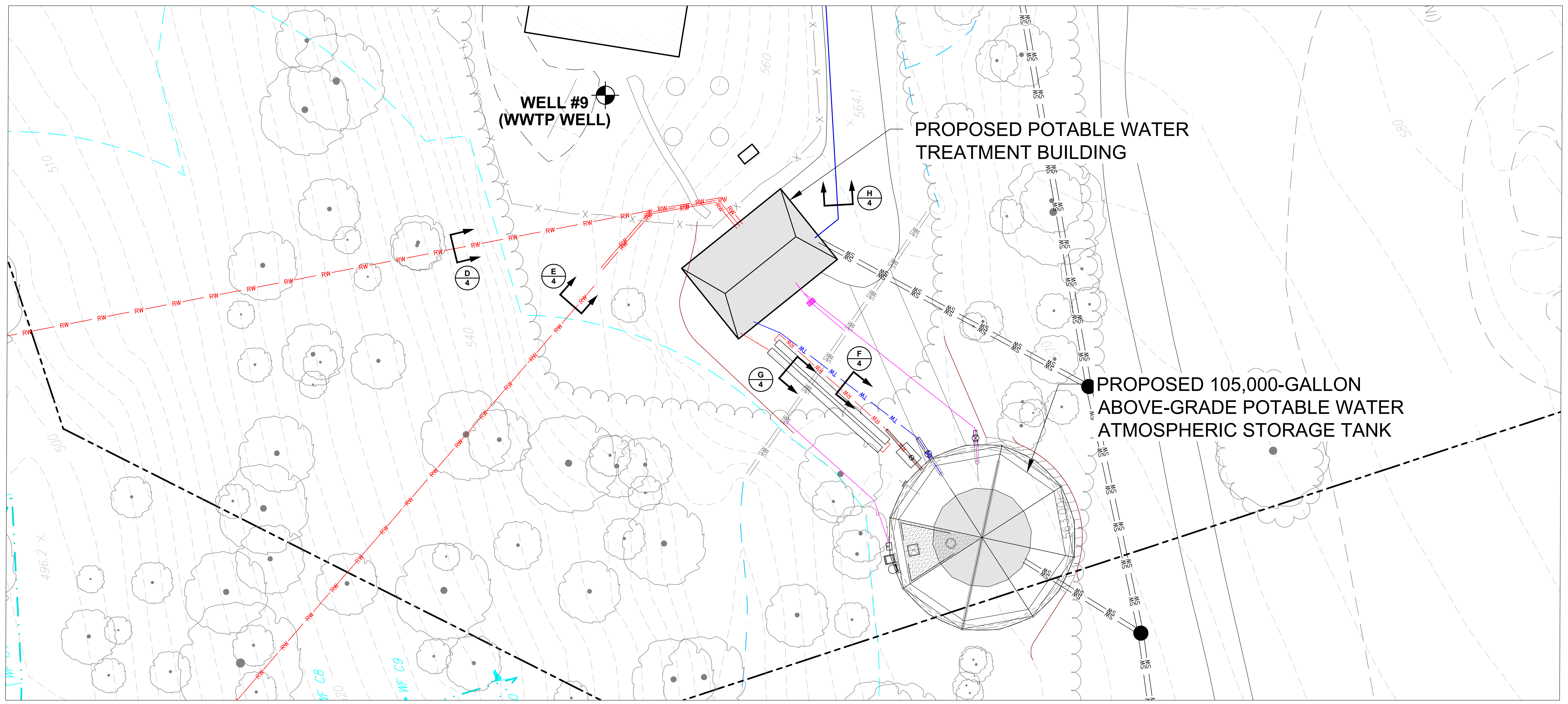

PLAN VIEW
SCALE: 1" = 20'

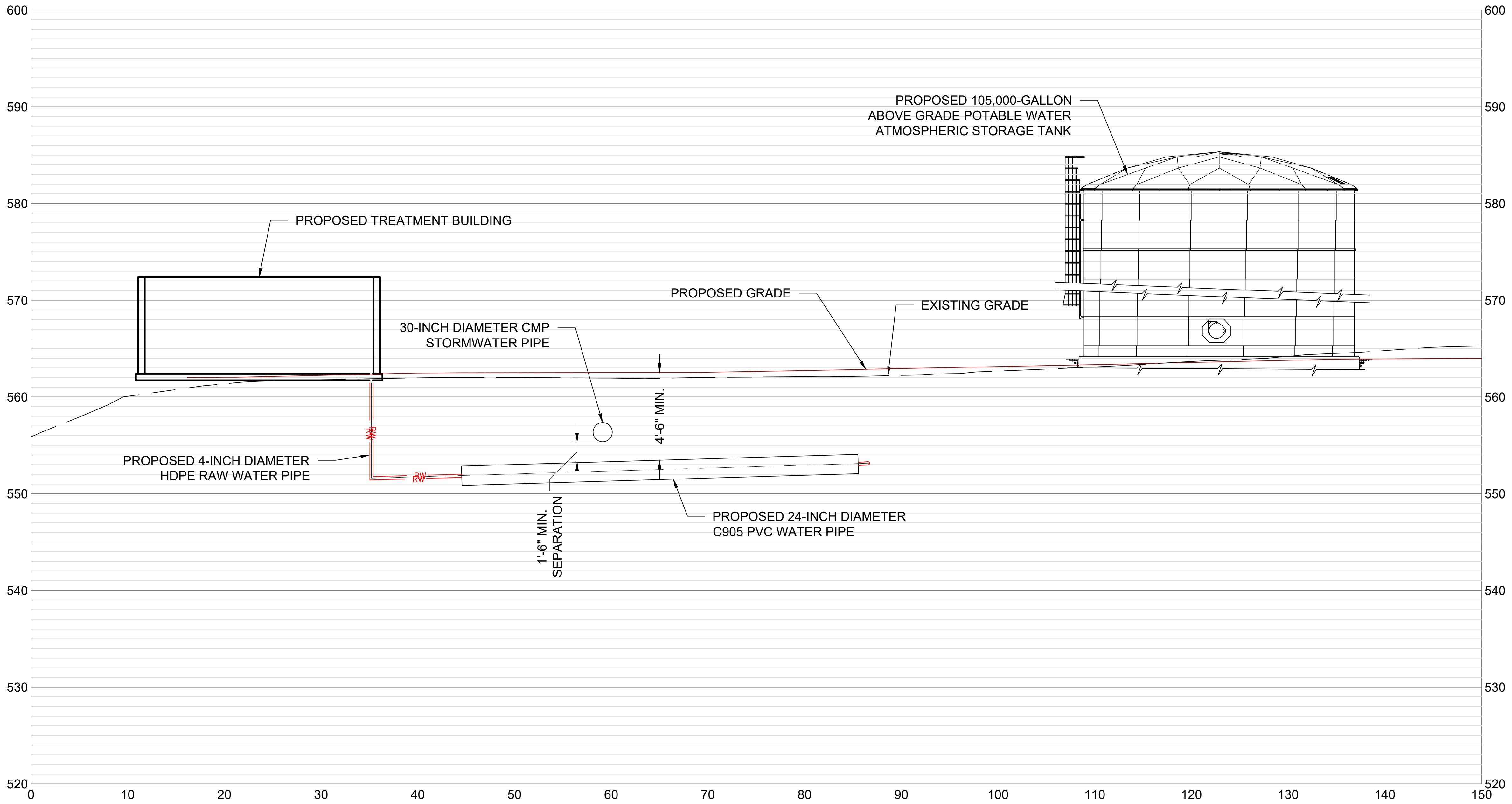

PROFILE VIEW
VERTICAL SCALE: 1" = 10'
HORIZONTAL SCALE: 1" = 10'

LEGEND

— - — - —	PROPERTY BOUNDARY
WF C13	EXISTING FLAGGED WETLAND BOUNDARY
— — —	EXISTING WETLAND BUFFER
630	EXISTING CONTOUR
636	PROPOSED CONTOUR
◈	EXISTING WELL
— E — E —	EXISTING ELECTRICAL LINE
— G — G —	EXISTING GAS LINE
— SW — SW —	EXISTING STORMWATER PIPE
— S — S —	EXISTING SANITARY SEWER MAIN
— SW — SW —	PROPOSED STORMWATER PIPE
— S — S —	PROPOSED SANITARY SEWER MAIN
———	PROPOSED 8-INCH DIA. DUCTILE IRON WATER MAIN
- - - - -	PROPOSED 4-INCH DIA. DUCTILE IRON DOMESTIC SERVICE CONNECTION
—·—·—·—	PROPOSED 4-INCH DIA. DUCTILE IRON FIRE SERVICE CONNECTION
— RW — RW —	PROPOSED 4-INCH DIA. HDPE RAW WATER PIPE
	PROPOSED FIRE HYDRANT
0+00	STATION NUMBER

0 10
VERTICAL SCALE IN FEET
0 10
HORIZONTAL SCALE IN FEET

REVISIONS

REV	DESCRIPTION
1	Revised: Chkd: Appr.:
2	Revised: Chkd: Appr.:
3	Revised: Chkd: Appr.:

SEAL

DATE

DRAWN BY	RAC
CHECKED	MS
APPROVED	SR
DRAWING DATE	08/17/22

PROPERTY OF WSP USA
IMPORTANT: THIS DRAWING PRINT IS LOANED FOR MUTUAL ASSISTANCE AND AS SUCH IS SUBJECT TO RECALL AT ANY TIME. INFORMATION CONTAINED HEREON IS NOT TO BE DISCLOSED OR REPRODUCED IN ANY FORM FOR THE BENEFIT OF PARTIES OTHER THAN NECESSARY SUBCONTRACTORS AND SUPPLIERS WITHOUT THE WRITTEN CONSENT OF WSP USA

NOTICE: THIS DRAWING HAS BEEN PREPARED UNDER THE DIRECTION OF A LICENSED PROFESSIONAL ENGINEER, IT IS A VIOLATION OF ARTICLE 130 OF THE NEW YORK STATE EDUCATION LAW FOR ANY PERSON TO ALTER THIS DOCUMENT IN ANY WAY WITHOUT THE EXPRESS WRITTEN VERIFICATION OR ADOPTION BY A NEW YORK STATE LICENSED LAND SURVEYOR OR ENGINEER IN ACCORDANCE WITH SECTION 7209 (2), ARTICLE 130, NEW YORK STATE EDUCATION LAW.

OVERSIZED WATER MAIN PLAN AND PROFILE

Summit Club Residential
568 Bedford Road (Route 22)
Town of North Castle, New York

WSP USA Inc.
6 Research Drive, Suite 260
Shelton, Connecticut 06484
(203) 929-8555

11 of 11

Sheet Number
9

D

SOURCE:
JMC "LAY-GRAD-UTIL_2022-05-11.dwg" EMAILED AUTOCAD FILE.

O:\DWG\Brynwood\Summit Club\Water Supply\P7-8_PlanProfile.dwg, Layout3, 9/29/2022 9:18:06 AM, DWG To PDF.pc3