CUDDY +FEDER LLP

445 Hamilton Avenue, 14th Floor
White Plains, New York 10601
T 914 761 1300
F 914 761 5372
cuddyfeder.com

Christopher B. Fisher, Esq.
cfisher@cuddyfeder.com

December 21, 2023

Chairman Christopher Carthy
and Members of the Planning Board
Town of North Castle
15 Bedford Road
Armonk, NY 10504

Re: Subdivision, Site Plan, Wetland Permit, and Tree Removal Permit
Redevelopment of the Former MBIA Headquarters
113 King Street, Armonk, NY
Supplemental Submission
Tax Id: 118.02-1-1; 113.04-1-13; 113.04-1-14; and 113.04-1-20

Dear Chairman Carthy and Members of the Planning Board:

On behalf of the property owner Airport Campus and contract vendee Toll Brothers (the "Co-Applicants"), we are making this supplemental submission in furtherance of the pending Subdivision, Site Plan, Wetland Permit, and Tree Removal Permit Applications associated with the redevelopment of the former MBIA Headquarters. Enclosed is a package of additional information in furtherance of the Board's comments at the November meeting, updates on reviews by other Town agencies and detailed responses to the latest Planning Department and Engineering review memoranda.

We highlight that the enclosed and updated drawings as prepared by JMC incorporate fence and landscape details for townhouse patios as requested by the Board and include some modifications to the subdivision/site plan drawings to incorporate street geometries and driveway details in furtherance of comments from Mr. Kellard. In this regard, there is a list of private road waivers included in the supplemental submission that will need to be considered as part of the subdivision approval process and we understand these waivers are mutually supported by the Co-Applicants and Town's engineers.

The supplemental submission also provides various updates with progress on other agency reviews including the ARB and Conservation Board. Additionally, the Co-Applicants anticipate filing a Petition with the Town Board by January 4, 2024, for the extension of municipal water to the project site. We look forward to appearing at the January 8, 2024, public hearing scheduled

on this Application and if in the interim there are any questions regarding the enclosed, please do not hesitate to contact me or Anthony Guccione at JMC.

Kind regards,

Christopher Fisher

cc: Adam Kaufman, Town Planner
Roland Baroni, Town Attorney
John Kellard, Town Engineer
Airport Campus LLC
Toll Brothers, Inc.
JMC
Maximillian Mahalek, Esq.

SUPPLEMENTAL SUBMISSION AND RESPONSE TO COMMENTS

To: **Town of North Castle Planning Board**
From: **Airport Campus and Toll Brothers**
Date: **December 21, 2023**
Re: **Subdivision, Site Plan, Wetland Permit, and Tree Removal Permit**
Redevelopment of the Former MBIA Headquarters Site

Enclosed for filing with the Planning Board are responses to the Town of North Castle Planning Department and KSCJ Consulting comment memoranda both dated 11/27/2023 along with information requested by the Planning Board at the 11/27/23 Meeting. Enclosed are drawings that have been updated along with substantive responses and enclosures related to the open items as prepared by the entire project team.

JMC Drawings, last revised December 21, 2023 and comprising the following sheets:

C-000: Cover Sheet;
C-010: Existing Conditions Plan;
C-020: Demolition Plan;
C-100: Overall Layout Plan;
C-101: Layout Plan;
C-102: Layout Plan;
C-151: Tree Protection Plan;
C-152: Tree Protection Plan;
C-153: Tree Protection Table (Part A);
C-154: Tree Protection Table (Part B);
C-155: Tree Protection Table (Part C);
C-201: Grading Plan;
C-202: Grading Plan;
C-210: Road Profiles;
C-301: Utilities Plan;
C-302: Utilities Plan;
C-320: Sanitary Sewer Profiles;
C-330: Water Main Profiles;
C-401: Erosion & Sediment Control Plan;
C-402: Erosion & Sediment Control Plan;
C-700: Vehicle Access Plan (Fire Truck);
C-701: Vehicle Access Plan (Delivery Truck);
C-702: Vehicle Access Plan (Garbage Truck);
C-900: Construction Details;
C-901: Construction Details;
C-902: Construction Details;
C-903: Construction Details;
C-904: Construction Details;
L-101: Landscape Plan;
L-102: Landscape Plan;
L-103: Typical Unit Landscape Plan;
IPP-1: Integrated Plot Plan; and.

PSP-1: Preliminary Subdivision Plat.

Lessard Design, Inc. dated November 20, 2023, or as noted below and comprising the following sheets:

A.001: Cover Sheet;
A.002: Tabulations; last revised December 20, 2023
A.100: Site Plan;
A.101: Basement Plan;
A1.02: 1st Floor Plan; last revised December 20, 2023
A.103: 2nd Floor Plan; last revised December 20, 2023
A.104: 3rd Floor Plan; last revised December 20, 2023
A.105: Penthouse Plan;
A.106: Garage Building – 1st Floor;

A.107: Garage Building – 2nd Floor;
A.201: North & South Elevation;
A.202: East & West Elevation;

A.203: Garage Elevations;
A.204: 3D Perspective View 01;
A.205: 3D Perspective View 02;
A.206: 3D Perspective View 03; and
A.207: 3D Perspective View 04.

December 7, 2023 Correspondence from the Conservation Board
November 14, 2023 Letter from the Byram Hills School District
December 18, 2023 Turf Management Plan by Marco Goncalves
December 20, 2023 Integrated Pest Management prepared by Bartlett Tree Experts
December 19, 2023 Report by B.Laing Associates titled *Qualitative Noise Evaluation and Standards for Residential Site Development*
Section 3-54 from *A Policy on Geometric Design of Highway and Streets* by the American Association of State Highway and Transportation Officials"

Town Planning Department Procedural Comments

Comments No. 1, 2, 5, 6, 8, 9, 10 and 11

Procedural comments and referrals.

Response No. 1, 2,5, 6, 8, 9, 10 and 11

The Applicants acknowledge these comments and requirements and that various referrals have been made.

Comment No. 3

Pursuant to Section 12-18.A of the Town Code, all site development plans submitted to the Planning Board are required to be referred to the Architectural Review Board (ARB) for review and comment.

Response No. 3

The Applicants submitted to the Architectural Review Board (ARB) and appeared at their December 6, 2023 meeting. The ARB had favorable comments overall and no additional items for consideration related to the repurposed senior apartment building and R-MF-SCH zone improvements. The ARB has some comments related to the Toll Brothers townhouse exteriors which are being considered. It is anticipated that additional information will be submitted by Toll Brothers for the ARB's consideration in February.

Comment No. 4

Pursuant to Section 340-5.B of the Town Code, the Conservation Board is required to review the proposed wetland application and, within 45 days of receipt thereof, file a written report and its recommendation concerning the application with the Planning Board. Such report is required to evaluate the proposed regulated activity in terms of the findings, intent and standards of Chapter 340.

Response No. 4

The Conservation Board approved the project at its November 21, 2023 meeting as documented in its December 7, 2023 correspondence, noting native landscape species should be utilized where possible and an IPM incorporated.

Comment No. 7

The Applicant shall submit the Traffic Impact Study to the New York State Department of Transportation (NYSDOT) for review and comment.

Response No. 7

The Applicants filed a Stage 1 submission with the NYSDOT.

Town Planning Department General Comments

Comment No. 1

Potable water update.

Response No. 1

The Applicants met with Town Water & Sewer Director Sal Misiti and Town Attorney Roland Baroni on December 1, 2023 to review the draft Map, Plan & Report and Petition to Extend Water District No. 8. Comments were received and are being incorporated. The Applicants expect to file the Petition with the Town Board by January 4, 2024.

Comment No. 2

Byram Hills School District bus stop update.

Response No. 2

The Applicants had discussions with the Byram Hills School District Transportation Supervisor reqarding their requirements prior to filing the application with the Planning Board. A November 14, 2023 memorandum from the Byram Hills School District requiring a bus stop at the intersection of Cooney Hill Road and the private street entering into the Toll Brothers community (formerly known as Weber Place) is attached. The Applicants understand that the School District will not make stops on private roads and requires this location over the signalized intersection along King Street (SR 120).

Comment No. 3

Condition for Building Department and RPRC review of individual site plans post Planning Board approval and during the building permit application process.

Response No. 3

In furtherance of the discussion at the November 27, 2023 Board meeting, Toll Brothers will coordinate with the Planning Department on clarifications related to an anticipated condition of approval.

Comment No. 4

As the site plans for each lot are developed, the site plans will need to depict visual privacy for the proposed rear yards (fencing, enclosed patios, etc.) pursuant to Section 355-24(G)(1) of the Town Code. The plans should be revised.

<u>Response No. 4</u>

The site plan drawings prepared by JMC have been revised to incorporate fence details and landscaping as requested by the Planning Board and in furtherance of Section 355-24(G)(1) of the Town Code.

<u>Comment No. 5</u>

The site plan depicts 2,011 square feet of Town-regulated steep slope disturbance.

<u>Response No. 5</u>

Slope disturbances have been minimized to the greatest extent practicable as part of the overall development of the project site.

<u>Comment No. 6</u>

Tree removal and mitigation approval by the Planning Board.

<u>Response No. 6</u>

The Conservation Board approved the project and provided its referral report in furtherance of Section 239-y.3 of the New York General Municipal Law. See response to Procedural Comment No. 4 and enclosure. The site plans now depict 1,078 trees to be planted on the site.

<u>Comment No. 7</u>

Wetland buffer disturbance and mitigation approval by the Planning Board.

<u>Response No. 7</u>

The Conservation Board approved the project and found the 2:1 mitigation for wetland buffer impacts acceptable. See response to Procedural Comment No. 4 and enclosure.

<u>Comment No.8</u>

The 1820's farmhouse.

<u>Response No. 8</u>

The Applicants are not aware of any Town or a community plan proposed for off-site relocation and are not proposing any on-site repurposing of the structure in response to public comments received at the November 27, 2023 meeting.

Comment No. 9

The Applicant has stated that blasting and chipping is proposed. The Applicant should indicate whether rock crushing is proposed.

Response No. 9

The Applicants are currently drafting the Construction Management Plan which will incorporate a section on blasting, chipping and any potential for rock crushing.

Comment No.10

Provide Turf Management Plan.

Response No. 10

Enclosed is a Turf Management Plan dated December 18, 2023 prepared by Marco Goncalves, a NYS DEC certified pesticide applicator and turf specialist.

Comment No. 11

The proposed irrigation system and review by WCDOH.

Response No. 11

JMC has followed up with WCDOH and confirmed the well(s) can be converted to a non-potable irrigation supply as part of redevelopment of the Site. An application for an irrigation well will need to be submitted to WCDOH for review and approval. The Applicants are not aware of any objection to same by WCDOH and the matter may be reviewed by WCDOH in conjunction with the review process for extension of potable water to the site.

Comment No. 12

The Applicant previously stated that site development would occur in two phases. The site plan should be revised to clearly depict the proposed phasing plan. The Applicant has stated that this information is provided on Plan C-402, however, staff was unable to discern the proposed phases. Perhaps this plan should also be revised to include a narrative describing what is proposed to be constructed in each phase (type of units, number of units, infrastructure, etc.).

Response No. 12

Additional notes have been added to Drawing C-402 regarding phasing. The sequence of construction has been revised to indicate what is proposed to be constructed in each phase, including the number of townhouse buildings and number of units.

Comment No. 13

The Findings Statement requires the Applicant to employ a full time construction manager for the Townhouse and Senior development projects. In addition, the Town Board finds that given current Town staffing levels combined with the size of both the Townhouse and Senior developments, the Applicant shall be required to reimburse the Town for costs associated with a third party part-time special engineering and/or building inspector.

Response No. 13

The Applicants anticipate developing a program in consultation with the Town Building Department and implementing same as part of the Site's redevelopment post any Planning Board approval of the subdivision and site plan. We would anticipate this being a condition of Planning Board site plan approval.

Comment No. 14

Pursuant to the Findings Statement, the Applicant shall prepare and submit a Construction Management Plan (CMP), to the satisfaction of the Town Engineer, addressing air quality, blasting, chipping, rock processing and construction noise impacts.

Response No. 14

The CMP is being drafted and will be provided to the Town Engineer and we would anticipate this being a condition of Planning Board site plan approval.

Comment No. 15

Provide closure report for 137 King Street oil tank removal.

Response No. 15

JMC has submitted a FOIL Request to the Building Department for copies of the four closure reports.

Comment No. 16

The subdivision plat shall be revised to include the dimension of all property lines (meets and bounds) and proposed section, block and lot numbers for each lot. In addition, the preliminary plat should be revised to depict how each lot complies with the minimum lot area (already provided), Lot Width and Lot Depth.

Response No. 16

Drawing PSP-1 "Preliminary Subdivision Plat" has been updated and together with Drawing IPP-1 "Integrated Plot Plan", includes the requested information, with the exception of metes and bounds for all proposed property lines, which will be added to drawing PSP-1 as part of standard subdivision conditions of approval by the Planning

Board.

Comment No. 17

Recreation Fees for the Townhomes – Planning Board Determination

Response No. 17

The Applicants and Planning Board had a detailed discussion on recreation fees at the November 27, 2023 meeting. The Planning Board will make a determination as to the on-site recreational amenities in the R-MF-A project, unmet demand from that portion of the project generally associated with usage of recreational fields the Town owns and maintains, and how much of the $351,000.00 fee cap under the Town Code should be assessed to Toll Brothers.

Comment No. 18

The site plan indicates signage is proposed for the project in the location of existing signage. The design of the new signage should be included on the plans.

Response No. 18

Drawing C-904 "Construction Details" include a detail of the signs proposed at the King Street entrance. In addition, +/- 2'x2' property identification signs are proposed on the reconstructed pillars at the Cooney Hill Road entrance. Final signage details will be developed post Planning Board approval and once the community name is established by the Applicants.

Comment No. 19

Pursuant to the adopted Findings Statement, to ensure that Site residents are aware of their proximity to the Airport, the Applicant shall place a notice in any rental agreement, offering plan, or contract for any residential unit on the Site notifying prospective residents of the Site's proximity to the Westchester County Airport.

Response No. 19

The Applicants will comply with this requirement and subsequent to any Planning Board approval of the subdivision and site plan applications anticipates incorporating same in relation to creation of the Homeowners Association for the Toll Brothers townhome development and meeting other Town requirements for the Senior Housing building set forth in the Town Board Findings.

Comment No. 20

Pursuant to the adopted Findings Statement, to ensure the townhouses are not modified subsequent to construction to add additional bedrooms, the Applicant has agreed to place a deed restriction in favor of the Town on each townhouse lot limiting the townhouses to three

bedrooms.

Response No. 20

See Response to Comment No. 19 above and the Applicants anticipate filing such a restriction as part of recording the final subdivision plat with the County Clerk.

Comment No. 21

Pursuant to the adopted Findings Statement, the project shall include additional noise attenuation above that required by the NYS Building Code in an effort to mitigate airport noise impacts to a level at or below 45 dBA. The Applicant provided information as to how they meet this standard. This information will need to be confirmed by the Building Department.

Response No. 21

The Planning Board requested additional information as part of a discussion with the Applicants at the November 27, 2023 meeting. Enclosed is a Report by B.Laing Associates dated December 19, 2023 titled *Qualitative Noise Evaluation and Standards for Residential Site Development* which confirms the townhome project's interior noise levels will be less than 45dBA using actual County noise measurements and FAA criteria.

Comment No. 22

The Applicant has committed to utilizing the existing integrated pest management plan (IPM) for the proposed project. The Applicant should submit this plan for the record.

Response No. 22

Enclosed is an Integrated Pest Management (IPM) dated December 20, 2023 as prepared by Bartlett Tree Experts.

Comments No. 23 to 26

Section 355-34.I(5)(b) of the Town Code AFFH Requirements.

Response No. 23 to 26

The Applicants acknowledge these requirements for the AFFH units.

Comment No. 27

Pursuant to Section 355-34.I(6)(a) of the Town Code the Applicant has provided information regarding the size of all units. Proposed AFFH Unit 212 is 1,126 square feet where 80% of the average market rate 1 bedroom unit is 1,157 square feet. Unit 212 shall be increased in size so that it complies with the minimum requirements of the Town Code.

Response No. 27

Lessard drawings are enclosed and have been updated for AFFH unit sizes in compliance with Section 355-34.I(6)(a) of the Town Code. Drawings A.002 and A.102 thru A.104 have been revised.

KSCJ Comments & Responses

The Applicants are in receipt of a comment letter from KSCJ Consulting, dated 11/27/2023.

As noted in the letter, the Applicant's site engineers at JMC met with Mr. Kellard prior to receiving the letter and again following issuance of the letter. As a result, the site plan and subdivision drawings have been modified to address Mr. Kellard's comments relative to horizontal and vertical roadway geometry, water distribution and sewer collection systems, drainage collection, site grading and erosion and sediment controls during construction.

It was agreed that the Stormwater Pollution Prevention Plan, which is being updated to reflect the changes made to the plans, will be submitted to KSCJ Consulting upon completion. These site plan changes do not result in any substantive modification to the layout of the project, nor do they change the unit count.

The driveway lengths have been increased to provide a minimum dimension of 22 feet from the curb line to the garage. Most driveways are longer than 22 feet.

While the project complies with the Subdivision Regulations for private roads, we understand the Town's regulations require use of public roadway standards when more than 4 lots are proposed in a subdivision subject to site specific waivers where appropriate. Here the Applicants are proposing three waivers from Section 275-25 of the Subdivision Regulations and the public roadway standards as follows:

1. Minimum centerline radius: 200' required/ 125' provided at one location and 175' provided at five locations
2. Minimum pavement width: 28' required/ 24' provided with 26' at hydrants
3. Road grades within 60' of an intersection: 1.5% max permitted/ proposed 2%-3% within 35' of an intersection

We have attached Section 3-54 from a document entitled "A Policy on Geometric Design of Highway and Streets" by the American Association of State Highway and Transportation Officials" which supports the reduced centerline radii. Also, speed limit signs have been added indicating a 20 MPH speed limit.

It is our understanding that with the enclosed changes made to the plans, Mr. Kellard is in support of the above noted waivers being issued by the Planning Board. We will continue to coordinate with KSCJ Consulting as part of the process and Planning Board review.

CO-Applicants:

AIRPORT CAMPUS I-V LLC
46 WESTCHESTER AVENUE
POUND RIDGE, NY 10576
(914) 764-1000

TOLL BROTHERS - CONTRACT VENDEE
42 OLD RIDGEBURY ROAD
DANBURY, CT 06810
(203) 616-4920

Civil Engineer, Surveyor, & Landscape Architect:
JMC
120 BEDFORD ROAD
ARMONK, NY 10504
(914) 273-5225

Attorneys:

Veneziano & Associates
84 BUSINESS PARK DRIVE, SUITE 200
ARMONK, NY 10504
(914) 273-1300

Cuddy & Feder
445 HAMILTON AVENUE, 14TH FLOOR
WHITE PLAINS, NY 10601
(914) 761-1300

Environmental, Planning, and Engineering Consultants:

AKRF, INC.
34 SOUTH BROADWAY, SUITE 401
WHITE PLAINS, NY 10601
(914) 922-2370

Wetland Consultant:

Ecological Solutions
1248 SOUTHFORD ROAD
SOUTHBURY, CT 06488
(203) 910-4716

Geotechnical Engenieer:

Carlin Simpson & Associates
61 MAIN STREET
SAYREVILLE, NJ 08872
(732) 432-5757

Architect:
Multifamily

Lessard Design
8521 LEESBURG PIKE, SUITE 700
VIENNA, VA 22182
(571) 830-1800

Architect:
Townhomes

Toll Brothers
42 OLD RIDGEBURY ROAD
DANBURY, CT 06810
(203) 616-4920

Traffic Engineers:

Colliers Engineer & Design
400 COLUMBUS AVENUE, SUITE 180E
VALHALLA, NY 10595
(914) 347-7500

SITE PLAN AND SUBDIVISION APPROVAL DRAWING SET

AIRPORT CAMPUS

TAX MAP SECTION 113.04 | BLOCK 1 | LOTS 13, 14 & 20
TAX MAP SECTION 118.02 | BLOCK 1 | LOT 1
WESTCHESTER COUNTY
113 KING STREET (NY ROUTE 120)
NORTH CASTLE, NY 10504

JMC Drawing List:

C-000	COVER SHEET
C-010	EXISTING CONDITIONS PLAN
C-020	DEMOLITION PLAN
C-100	OVERALL LAYOUT PLAN
C-101	LAYOUT PLAN
C-102	LAYOUT PLAN
C-151	TREE PROTECTION PLAN
C-152	TREE PROTECTION PLAN
C-153	TREE PROTECTION TABLE (PART A)
C-154	TREE PROTECTION TABLE (PART B)
C-155	TREE PROTECTION TABLE (PART C)
C-201	GRADING PLAN
C-202	GRADING PLAN
C-210	ROAD PROFILES
C-301	UTILITIES PLAN
C-302	UTILITIES PLAN
C-320	SANITARY SEWER PROFILES
C-330	WATER MAIN PROFILES
C-401	EROSION AND SEDIMENT CONTROL PLAN
C-402	EROSION AND SEDIMENT CONTROL PLAN
C-700	VEHICLE ACCESS PLAN (FIRE TRUCK)
C-701	VEHICLE ACCESS PLAN (DELIVERY TRUCK)
C-702	VEHICLE ACCESS PLAN (GARBAGE TRUCK)
C-900	CONSTRUCTION DETAILS
C-901	CONSTRUCTION DETAILS
C-902	CONSTRUCTION DETAILS
C-903	CONSTRUCTION DETAILS
C-904	CONSTRUCTION DETAILS
L-101	LANDSCAPE PLAN
L-102	LANDSCAPE PLAN
L-103	TYPICAL UNIT LANDSCAPE PLAN
IPP-1	INTEGRATED PLOT PLAN
PSP-1	PRELIMINARY SUBDIVISION PLAT

WLS Lighting Drawing List:

WLS-17145	SHEET 1
WLS-17145	SHEET 2
WLS-17145	SHEET 3

AREA MAP
SCALE: 1" = 120'

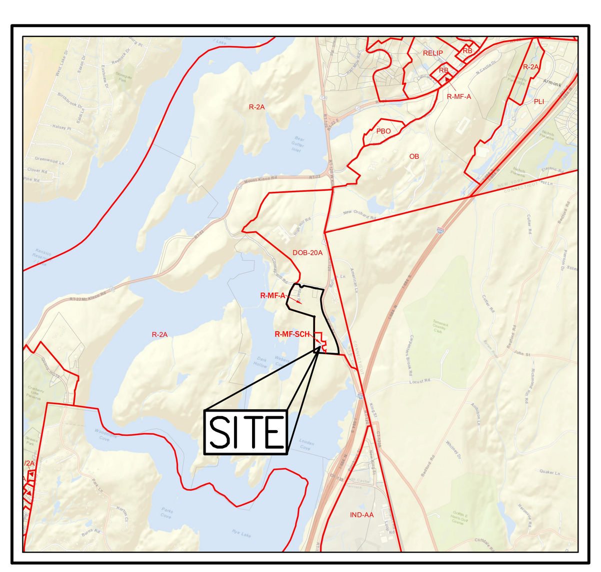

ZONING MAP
SCALE: 1" = 3,500'

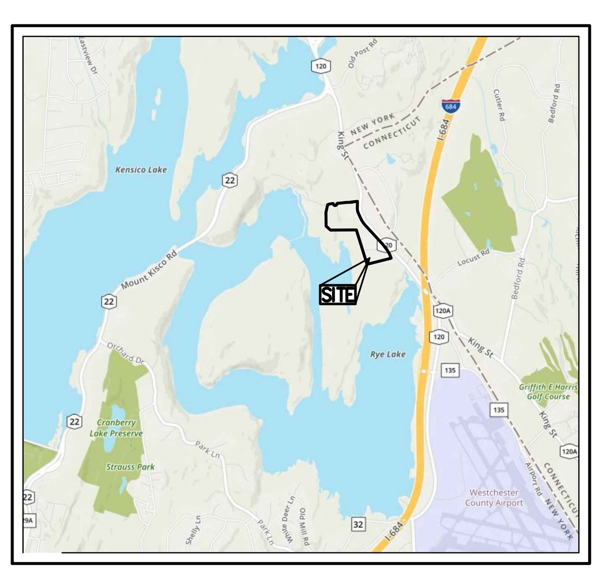

SITE LOCATION MAP
SCALE: 1" = 3,500'

ZONING COMPLIANCE TABLE

SECTION 113.04, BLOCK 1, LOTS 13, 14 & 20
SECTION 118.02, BLOCK 1, LOT 1
PROPOSED USE: AIRPORT CAMPUS RESIDENTIAL DEVELOPMENT
FIRE DISTRICT: ARMONK FIRE DEPARTMENT (NORTH CASTLE FIRE DISTRICT #2)
SCHOOL DISTRICT: BYRAM HILLS CENTRAL SCHOOL DISTRICT
SEWER DISTRICT: SD3

R-MF-SCH (MULTIFAMILY SENIOR CITIZEN HOUSING DISTRICT)	R-MF-SCH REQUIREMENT	PROVIDED
MINIMUM LOT AREA	4.0 ACRES(1)	4.49 ACRES(2)
NET LOT AREA	–	3.62 ACRES
MINIMUM PERIMETER FRONT YARD SETBACKS	185 FEET(1)	185 FT
MINIMUM PERIMETER REAR YARD SETBACKS	14 FEET(1)	14 FT
MINIMUM PERIMETER SIDE YARD SETBACKS	46 FEET(1)	46 FT
MINIMUM LOT FRONTAGE	110 FEET(1)	117 FT
MINIMUM LOT WIDTH	500 FEET(1)	655 FT
MINIMUM LOT DEPTH	265 FEET(1)	265 FT
MAXIMUM BUILDING COVERAGE	25 PERCENT(1)	19.0 PERCENT
MAXIMUM BUILDING HEIGHT	2.5 STORIES / 30 FEET	3 STORIES + PENTHOUSE / ±51.7 FEET (EXISTING)
MAXIMUM FLOOR AREA RATIO	0.80(1)	0.70
PARKING	95(3)	106

R-MF-A (MULTIFAMILY DISTRICT)	R-MF-A PERIMETER REQUIREMENT	PROVIDED
MINIMUM LOT AREA	5 ACRES	34.30 ACRES
NET LOT AREA	–	33.81 ACRES
MINIMUM FRONT YARD SETBACKS	10 FEET	64 FEET
MINIMUM REAR YARD SETBACKS	25 FEET	25 FEET
MINIMUM SIDE YARD SETBACKS	10 FEET	32 FEET
MAXIMUM BUILDING COVERAGE	20 PERCENT	17.8 PERCENT
MAXIMUM BUILDING HEIGHT	3 STORIES / 30 FEET	2 STORIES / 29 FEET
DENSITY	105.2 DENSITY UNITS (1 DU/14,000 SF)(4)	83.3 DENSITY UNITS
PARKING	256(5)	286(6)

R-MF-A (MULTIFAMILY DISTRICT)	R-MF-A ATTACHED REQUIREMENT	PROVIDED
MINIMUM LOT AREA	2,500 SQUARE FEET	> 2,500 SQUARE FEET
MINIMUM FRONT YARD SETBACKS	10 FEET	> 10 FEET
MINIMUM REAR YARD SETBACKS	10 FEET	> 10 FEET
MINIMUM SIDE YARD SETBACKS	0 FEET	0 FEET
MAXIMUM BUILDING COVERAGE	50 PERCENT	< 50 PERCENT
MAXIMUM BUILDING HEIGHT	3 STORIES / 30 FEET	2 STORIES / 29 FEET

TABLE OF LAND USE NOTES

(1) AS DETERMINED BY THE TOWN BOARD RESOLUTION, DATED AUGUST 9, 2023.
(2) LOT AREA INCLUDES 0.24 ACRE WATER TANK LOT.
(3) APARTMENT PARKING REQUIREMENT: 2 SPACES PER DWELLING UNIT, PLUS ½ PER EACH BEDROOM IN EXCESS OF 2 BEDROOMES, PLUS 10% FOR VISITOR PARKING.
(4) AS REQUIRED BY §355-25
(5) TOWNHOME PARKING REQUIREMENT: 2 SPACES REQUIRED FOR EACH MARKET RATE TOWNHOME UNIT AND 1 SPACE FOR EACH UNIT PLUS ½ FOR EACH BEDROOM FOR AFFH UNIT.
(6) PARKING PROVIDED FOR EACH MARKET RATE RESIDENTIAL TOWNHOME UNIT INCLUDES 2 DRIVEWAY SPACES AND FOR EACH AFFH RESIDENTIAL TOWNHOME UNIT INCLUDES 2 SPACES AND ½ SPACE ALONG THE ROADWAYS (2 ½ SPACES PER UNIT TOTAL). 20 SPACES ARE PROVIDED NEAR THE PROPOSED CLUBHOUSE AND 16 ADDITIONAL SPACES ARE PROVIDED ALONG THE ROADWAYS (6 SPACES FOR AFFH UNITS AND 10 GUEST SPACES). IN ADDITION, 238 GARAGE SPACES ARE PROVIDED, WHICH ARE NOT INCLUDED IN THE PROVIDED PARKING COUNTS.

R-MF-SCH NET LOT AREA AND FLOOR AREA RATIO CALCULATIONS

- **TOTAL PROPOSED LOT AREA = 195,606 SF (4.49 ACRES)**
- **WETLANDS & WATERBODIES** = 50,466 SF (1.16 ACRES) X 0.75 = **37,850 SF (0.87 ACRES)**
- **STEEP SLOPES** (25% SLOPE OR GREATER) = 0 SF (0.00 ACRES) X 0.50 = **0 SF (0.00 ACRES)**
- **NET LOT AREA** = 195,606 SF (4.49 ACRES) – 37,850 SF (0.87 ACRES) = **157,756 SF (3.62 ACRES)**
- **MULTIFAMILY FLOOR AREA** (INCLUDES BASEMENT AND EXCLUDES 2-STORY GARAGE) = **110,418 SF**
- **FLOOR AREA RATIO** = 110,418 SF / 157,756 SF = **0.70 FAR**

R-MF-A NET LOT AREA AND UNIT DENSITY CALCULATIONS

- THE MAXIMUM GROSS DENSITY SHALL NOT EXCEED ONE DENSITY UNIT PER 14,000 SF OF NET LOT AREA [ZONING 355-25.B.(1)]
- TOWNHOMES – A DENSITY UNIT IS 1 ½ DWELLING UNITS CONTAINING 3 BEDROOMS EACH IN PERMITTED DWELLINGS OTHER THAN ONE-FAMILY DETACHED UNITS [ZONING 355-4]
- **TOTAL PROPOSED LOT AREA = 1,493,964 SF (34.30 ACRES)**
- **WETLANDS & WATERBODIES** = 10,682 SF (0.25 ACRES) X 0.75 = **8,012 SF (0.18 ACRES)**
- **STEEP SLOPES (25% SLOPE OR GREATER)** = 17,638 SF (0.40 ACRES) X 0.75 = **13,229 SF (0.30 ACRES)**
- **NET LOT AREA** = 1,493,964 SF (34.30 ACRES) – 8,012 SF (0.18 ACRES) – 13,229 SF (0.30 ACRES) = **1,472,723 SF (33.81 ACRES)**
- **DENSITY UNITS PERMITTED** = 1,472,723 SF / 14,000 SF = **105.2 DENSITY UNITS**
- **DENSITY UNITS PROPOSED** = 125 UNITS / 1.5 = **88.3 DENSITY UNITS**
- **105.2 DENSITY UNITS > 88.3 DENSITY UNITS, THEREFORE COMPLIES**

RESIDENTIAL UNIT BREAKDOWN TABLE

	UNIT COUNT	BEDROOMS
TOWNHOMES		
SAUNDERS/ATKINSON	33	3 PER UNIT
WILKERSON	40	3 PER UNIT
WALTERS	40	3 PER UNIT
WELWYN (AFFH)	12	3 PER UNIT
TOWNHOMES TOTAL	**125**	**375**
MULTIFAMILY (SENIOR)		
TYPE A (AFFH)	1	1 PER UNIT
TYPE B	12	1 PER UNIT
TYPE C	27	2 PER UNIT
TYPE C (AFFH)	3	2 PER UNIT
MULTIFAMILY TOTAL	**43**	**73**
SITE TOTAL	**168**	**448**

GENERAL CONSTRUCTION NOTES APPLY TO ALL WORK HEREIN:

1. PRIOR TO CONSTRUCTION, THE CONTRACTOR SHALL CALL 811 "DIG SAFELY" (1-800-962-7962) TO HAVE UNDERGROUND UTILITIES LOCATED INCLUDING ARRANGING FOR A PRIVATE MARKOUT ON-SITE WHERE APPLICABLE. EXPLORATORY EXCAVATIONS SHALL COMPLY WITH CODE 753 REQUIREMENTS. NO WORK SHALL COMMENCE UNTIL ALL THE OPERATORS HAVE NOTIFIED THE CONTRACTOR THAT THEIR UTILITIES HAVE BEEN LOCATED. THE CONTRACTOR SHALL BE RESPONSIBLE FOR THE PRESERVATION OF ALL PUBLIC AND PRIVATE UNDERGROUND AND SURFACE UTILITIES AND STRUCTURES AT OR ADJACENT TO THE SITE OF CONSTRUCTION, INSOFAR AS THEY MAY BE ENDANGERED BY THE CONTRACTOR'S OPERATIONS. THIS SHALL HOLD TRUE WHETHER OR NOT THEY ARE SHOWN ON THE CONTRACT DRAWINGS. IF THEY ARE SHOWN ON THE DRAWINGS, THEIR LOCATIONS ARE NOT GUARANTEED EVEN THOUGH THE INFORMATION WAS OBTAINED FROM THE BEST AVAILABLE SOURCES, AND IN ANY EVENT, OTHER UTILITIES ON THESE PLANS MAY BE ENCOUNTERED IN THE FIELD. THE CONTRACTOR SHALL, AT HIS OWN EXPENSE, IMMEDIATELY REPAIR OR REPLACE ANY STRUCTURES OR UTILITIES THAT HE DAMAGES, AND SHALL CONSTANTLY PROCEED WITH CAUTION TO PREVENT UNDUE INTERRUPTION OF UTILITY SERVICE.

2. CONTRACTOR SHALL HAND DIG TEST PITS TO VERIFY THE LOCATION OF ALL EXISTING UNDERGROUND UTILITIES PRIOR TO THE START OF CONSTRUCTION. CONTRACTOR SHALL VERIFY EXISTING UTILITIES DEPTHS AND ADVISE OF ANY CONFLICTS WITH PROPOSED UTILITIES. IF CONFLICTS ARE PRESENT. THE OWNER'S FIELD REPRESENTATIVE, JMC, PLLC AND THE APPLICABLE MUNICIPALITY OR AGENCY SHALL BE NOTIFIED IN WRITING. THE EXISTING/PROPOSED UTILITIES RELOCATION SHALL BE DESIGNED BY JMC, PLLC.

3. CONTRACTOR IS RESPONSIBLE FOR OBTAINING ANY AND ALL LOCAL PERMITS REQUIRED.

4. ALL WORK SHALL BE DONE IN STRICT COMPLIANCE WITH ALL APPLICABLE NATIONAL, STATE, AND LOCAL CODES, STANDARDS, ORDINANCES, RULES, AND REGULATIONS. ALL CONSTRUCTION WORK SHALL BE PERFORMED IN ACCORDANCE WITH ALL SAFETY CODES. APPLICABLE SAFETY CODES MEAN THE LATEST EDITION INCLUDING ANY AND ALL AMENDMENTS, REVISIONS, AND ADDITIONS THERETO, TO THE FEDERAL DEPARTMENT OF LABOR, OCCUPATIONAL SAFETY AND HEALTH ADMINISTRATION'S OCCUPATIONAL SAFETY AND HEALTH STANDARDS (OSHA); AND APPLICABLE SAFETY, HEALTH REGULATIONS AND BUILDING CODES FOR CONSTRUCTION IN THE STATE OF NEW YORK. THE CONTRACTOR SHALL BE RESPONSIBLE FOR GUARDING AND PROTECTING ALL OPEN EXCAVATIONS IN ACCORDANCE WITH THE PROVISION OF SECTION 107-05 (SAFETY AND HEALTH REQUIREMENTS) OF THE NYSDOT STANDARD SPECIFICATIONS. IF THE CONTRACTOR PERFORMS ANY HAZARDOUS CONSTRUCTION PRACTICES, ALL OPERATIONS IN THE AFFECTED AREA SHALL BE DISCONTINUED AND IMMEDIATE ACTION SHALL BE TAKEN TO CORRECT THE SITUATION TO THE SATISFACTION OF THE APPROVAL AUTHORITY HAVING JURISDICTION.

5. CONTRACTOR SHALL MAINTAIN ACCESS TO ALL PROPERTIES AFFECTED BY THE SCOPE OF WORK SHOWN HEREON AT ALL TIMES TO THE SATISFACTION OF THE OWNERS REPRESENTATIVE. RAMPING CONSTRUCTION TO PROVIDE ACCESS MAY BE CONSTRUCTED WITH SUBBASE MATERIAL EXCEPT THAT TEMPORARY ASPHALT CONCRETE SHALL BE PLACED AS DIRECTED BY THE ENGINEER. THE CONTRACTOR SHALL BE RESPONSIBLE FOR PROVIDING SAFE PEDESTRIAN ACCESS AT ALL TIMES.

6. CONTRACTOR SHALL MAINTAIN THE INTEGRITY OF EXISTING PAVEMENT TO REMAIN.

APPROVED BY TOWN OF NORTH CASTLE PLANNING BOARD RESOLUTION, DATED ________

________________________ DATE: ________
CHRISTOPHER CARTHY, CHAIRMAN,
TOWN OF NORTH CASTLE PLANNING BOARD

ENGINEERING PLANS REVIEWED FOR CONFORMANCE TO RESOLUTION

________________________ DATE: ________
JOSEPH M. CERMELE, PE
KSCJ CONSULTING
CONSULTING TOWN ENGINEERS

SUBSURFACE UTILITY LOCATIONS ARE BASED ON A COMPILATION OF FIELD EVIDENCE, AVAILABLE RECORD PLANS AND/OR UTILITY MARK-OUTS. THE LOCATION OR COMPLETENESS OF UNDERGROUND INFORMATION CANNOT BE GUARANTEED. VERIFY THE ACTUAL LOCATION OF ALL UTILITIES PRIOR TO EXCAVATION OR CONSTRUCTION.

811 Know what's below. Call before you dig.

No.	Revision	Date	By
1.	REVISED FEIS	01/20/2023	BMS
2.	PLANNING BOARD SUBMISSION	10/06/2023	BMS
3.	TOWN CONSERVATION BOARD SUBMISSION	10/31/2023	BMS
4.	PLANNING BOARD RESUBMISSION	11/10/2023	BMS
5.	PLANNING BOARD RESUBMISSION	12/21/2023	BMS

Previous Editions Obsolete

JMC Planning, Engineering, Landscape Architecture & Land Surveying, PLLC
JMC Site Development Consultants, LLC
John Meyer Consulting, Inc.
120 BEDFORD ROAD • ARMONK, NY 10504
voice 914.273.5225 • fax 914.273.2102
www.jmcpllc.com

ANY ALTERATION OF PLANS, SPECIFICATIONS, PLATS AND REPORTS BEARING THE SEAL OF A LICENSED PROFESSIONAL ENGINEER OR LICENSED LAND SURVEYOR IS A VIOLATION OF SECTION 7209 OF THE NEW YORK STATE EDUCATION LAW, EXCEPT AS PROVIDED FOR BY SECTION 7209, SUBSECTION 2.

STATE OF NEW YORK – DAVID P. LOMBARDI – 071001 – LICENSED PROFESSIONAL ENGINEER

Drawn: BMS	Approved: AG
Scale: AS NOTED	
Date: 09/21/2022	
Project No: 15072	
15072-COVER	COVER / COVER.scr
Drawing No: C–000	

COPYRIGHT © 2023 by JMC All Rights Reserved. No part of this document may be reproduced, stored in a retrieval system, or transmitted in any form or by means, electronic, mechanical, photocopying, recording or otherwise, without the prior written permission of JMC PLANNING, ENGINEERING, LANDSCAPE ARCHITECTURE & LAND SURVEYING, PLLC | JMC SITE DEVELOPMENT CONSULTANTS, LLC | JOHN MEYER CONSULTING, INC. (JMC). Any modifications or alterations to this document without the written permission of JMC shall render them invalid and unusable.

NOT FOR CONSTRUCTION

LEGEND

- EXISTING PROPERTY LINE
- ADJACENT PROPERTY LINE
- EXISTING EASEMENT LINE
- WF-03 WF-04 WF-05 — EXISTING WETLAND LINE AND DELINEATION
- EXISTING BUILDING OVERHANG
- EXISTING BUILDING LINE
- EXISTING PAVEMENT EDGE
- EXISTING CURB LINE
- EXISTING CONTOUR
- EXISTING INDEX CONTOUR
- EXISTING STONE WALL
- EXISTING RETAINING WALL
- EXISTING GUIDE RAIL
- EXISTING FENCE
- EXISTING TREE AND DESIGNATION
- EXISTING TREE LINE
- EXISTING DIRECTIONAL ARROWS
- EXISTING PAINT
- EXISTING PARKING WITH NUMBER OF SPACES
- EXISTING HANDICAP PARKING WITH NUMBER OF SPACES
- EXISTING PEDESTRIAN CROSSING
- 36" RCP — EXISTING STORM DRAIN LINE AND SIZE
- 8" SAN — EXISTING SANITARY LINE AND SIZE
- EXISTING WATER LINE
- EXISTING GAS LINE
- EXISTING OVERHEAD WIRES
- EXISTING DRAIN INLET
- EXISTING MANHOLE
- EXISTING FIRE HYDRANT
- EXISTING GAS VALVE
- EXISTING WATER VALVE
- EXISTING UTILITY POLE
- EXISTING LIGHT POLE
- EXISTING SIGN
- DP-2 — BORING LOCATION AND DESIGNATION

NOTES:

1. EXISTING CONDITIONS DEPICTED ON THIS PLAN HAVE BEEN TAKEN FROM SURVEY TITLED, "PARCEL COMPILATION SURVEY DEPICTING LAND OF MBIA INSURANCE CORP.," PREPARED BY JOHN MEYER CONSULTING, DATED 09/30/2005 AND SUPPLEMENTED WITH SURVEY TITLED, "TOPOGRAPHIC SURVEY," PREPARED BY JMC PLANNING, ENGINEERING, LANDSCAPE ARCHITECTURE & LAND SURVEYING, PLLC, DATED 02/10/2022.
2. GEOTECHNICAL BORING/TEST PIT LOCATIONS DEPICTED ON THIS PLAN WERE TAKEN FROM THE GEOTECHNICAL REPORT ENTITLED, "LETTER REPORT ON SUBSURFACE SOIL AND GROUNDWATER INVESTIGATION", DATED 12/20/2021, PREPARED BY CARLIN SIMPSON & ASSOCIATES, LLC.
3. THE WETLANDS DEPICTED ON THIS PLAN WERE DELINEATED BY ECOLOGICAL SOLUTIONS, LLC ON 07/10/2018 AND CONFIRMED BY THE TOWN WETLAND CONSULTANT ON 10/01/2020.

APPROVED BY TOWN OF NORTH CASTLE PLANNING BOARD RESOLUTION, DATED _____

_____ DATE: _____
CHRISTOPHER CARTHY, CHAIRMAN,
TOWN OF NORTH CASTLE PLANNING BOARD

ENGINEERING PLANS REVIEWED FOR CONFORMANCE TO RESOLUTION

_____ DATE: _____
JOSEPH M. CERMELE, PE
KSCJ CONSULTING
CONSULTING TOWN ENGINEERS

GRAPHIC SCALE
60 0 30 60 120 240
(IN FEET)
1 inch = 60 ft.

No.	Revision	Date	By
1.	REVISED FEIS	01/20/2023	BMS
2.	PLANNING BOARD SUBMISSION	10/06/2023	BMS
3.	TOWN CONSERVATION BOARD SUBMISSION	10/31/2023	BMS
4.	PLANNING BOARD RESUBMISSION	11/10/2023	BMS
5.	TOWN CONSERVATION BOARD	11/17/2023	BMS
6.	PLANNING BOARD RESUBMISSION	12/21/2023	BMS

Revised Editions Obsolete

APPLICANT/OWNER:

AIRPORT CAMPUS I-V LLC
40 WESTCHESTER AVENUE
POUND RIDGE, NY 10576

JMC Planning, Engineering, Landscape Architecture & Land Surveying, PLLC
JMC Site Development Consultants, LLC
John Meyer Consulting, Inc.
120 BEDFORD ROAD • ARMONK, NY 10504
voice 914.273.5225 • fax 914.273.2102
www.jmcpllc.com

EXISTING CONDITIONS PLAN

AIRPORT CAMPUS
113 KING STREET (NY ROUTE 120)
NORTH CASTLE, NY 10504

ANY ALTERATION OF PLANS, SPECIFICATIONS, PLATS AND REPORTS BEARING THE SEAL OF A LICENSED PROFESSIONAL ENGINEER OR LICENSED LAND SURVEYOR IS A VIOLATION OF SECTION 7209 OF THE NEW YORK STATE EDUCATION LAW, EXCEPT AS PROVIDED FOR BY SECTION 7209, SUBSECTION 2.

STATE OF NEW YORK — DAVID P. LOUGHRAN — 071001 — LICENSED PROFESSIONAL ENGINEER

Drawn:	BMS	Approved:	AG
Scale:	1" = 60'		
Date:	09/21/2022		
Project No:	15072		
DWG-IMAGE	EXIST	EXIST.dwg	

Drawing No:
C-010

COPYRIGHT © 2023 by JMC All Rights Reserved. No part of this document may be reproduced, stored in a retrieval system, or transmitted in any form or by means, electronic, mechanical, photocopying, recording or otherwise, without the prior written permission of JMC PLANNING, ENGINEERING, LANDSCAPE ARCHITECTURE & LAND SURVEYING, PLLC (JMC PLLC). Any modifications or alterations to this document without the written permission of JMC PLLC shall render them invalid and unusable.

NOT FOR CONSTRUCTION

LEGEND

- EXISTING PROPERTY LINE
- ADJACENT PROPERTY LINE
- EXISTING EASEMENT LINE
- EXISTING WETLAND LINE AND DELINEATION (WLF-63, WLF-64, WLF-65)
- EXISTING BUILDING OVERHANG
- EXISTING BUILDING LINE
- EXISTING PAVEMENT EDGE
- EXISTING CURB LINE
- EXISTING CONTOUR (172)
- EXISTING INDEX CONTOUR (170)
- EXISTING STONE WALL
- EXISTING RETAINING WALL
- EXISTING GUIDE RAIL
- EXISTING FENCE
- EXISTING TREE AND DESIGNATION (T10 M)
- EXISTING TREE TO BE REMOVED (T10 M)
- EXISTING TREE LINE
- EXISTING DIRECTIONAL ARROWS
- EXISTING PAINT
- EXISTING PARKING WITH NUMBER OF SPACES (5)
- EXISTING HANDICAP PARKING WITH NUMBER OF SPACES (2H)
- EXISTING PEDESTRIAN CROSSING
- EXISTING STORM DRAIN LINE AND SIZE (36" RCP)
- EXISTING SANITARY LINE AND SIZE (8" SAN)
- EXISTING WATER LINE
- EXISTING GAS LINE
- EXISTING OVERHEAD WIRES
- EXISTING DRAIN INLET
- EXISTING MANHOLE
- EXISTING FIRE HYDRANT
- EXISTING GAS VALVE (GV)
- EXISTING WATER VALVE (WV)
- EXISTING UTILITY POLE
- EXISTING LIGHT POLE
- EXISTING SIGN
- EXISTING FEATURE TO BE REMOVED
- PROPOSED SAWCUT LINE
- PAVEMENT REMOVAL
- SIDEWALK REMOVAL
- BUILDING DEMOLITION

NOTES:

1. EXISTING CONDITIONS DEPICTED ON THIS PLAN HAVE BEEN TAKEN FROM SURVEY TITLED, "PARCEL COMPILATION SURVEY DEPICTING LAND OF MBIA INSURANCE CORP.," PREPARED BY JOHN MEYER CONSULTING, DATED 09/30/2005.
2. GEOTECHNICAL BORING/TEST PIT LOCATIONS DEPICTED ON THIS PLAN WERE TAKEN FROM THE GEOTECHNICAL REPORT ENTITLED, "SUBSURFACE SOIL AND FOUNDATION INVESTIGATION", DATED 12/30/2019, PREPARED BY CARLIN-SIMPSON & ASSOCIATES, LLC.
3. THE CONTRACTOR SHALL VERIFY THE LOCATION OF EXISTING UTILITIES TO BE DEMOLISHED AND EXISTING UTILITIES TO BE PROTECTED. IF ANY DISCREPANCIES ARE FOUND, THE CONTRACTOR SHALL NOTIFY THE GENERAL CONTRACTOR AND JMC PRIOR TO THE START OF CONSTRUCTION.
4. PRIOR TO THE START OF ANY DEMOLITION THE CONTRACTOR SHALL OBTAIN ALL NECESSARY PERMITS AND/OR APPROVALS FROM THE TOWN OF NORTH CASTLE AND ALL OTHER AUTHORITIES HAVING JURISDICTION. CONTRACTOR SHALL PAY ALL OUTSTANDING FEES, CHARGES, AND DEPOSITS TO ACQUIRE SAID PERMITS. NO DEMOLITION SHALL COMMENCE UNTIL A PERMIT HAS BEEN OBTAINED FROM THE TOWN OF NORTH CASTLE.
5. THE CONTRACTOR SHALL COORDINATE THE DISCONNECTION OF ALL UTILITIES WITH THE UTILITY COMPANY HAVING JURISDICTION PRIOR TO THE START OF DEMOLITION. CONFIRMATION OF DISCONNECTED UTILITIES SHALL BE PROVIDED TO THE TOWN OF NORTH CASTLE BUILDING DEPARTMENT IN ACCORDANCE WITH THEIR REQUIREMENTS. LETTERS FROM THE APPROPRIATE UTILITIES STATING THAT GAS AND ELECTRIC HAVE BEEN CUT OFF SHALL BE PROVIDED TO THE TOWN OF NORTH CASTLE.
6. THE CONTRACTOR SHALL OBTAIN, AND PROVIDE A COPY TO THE TOWN OF NORTH CASTLE, A SEWER PLUG PERMIT INDICATING THAT A LICENSED PLUMBER HAS PLUGGED ALL EXISTING SEWER LINES TO THE EXISTING BUILDING. THE CONTRACTOR SHALL OBTAIN, AND PROVIDE A COPY TO THE TOWN OF NORTH CASTLE, A WATER USE PERMIT INDICATING THAT A LICENSED PLUMBER HAS CUT AND SEALED ALL EXISTING WATER SERVICE TO THE EXISTING BUILDING.
7. ANY UNSUITABLE MATERIAL FOUND ON-SITE DURING DEMOLITION/CONSTRUCTION, AS DETERMINED BY THE PROJECT'S GEOTECHNICAL ENGINEER, SHALL BE PROPERLY DISPOSED OF OFF-SITE IN A MANNER APPROVED BY ALL AUTHORITIES HAVING JURISDICTION AND REPLACED WITH SUITABLE MATERIAL AS REQUIRED.
8. ANY UNSUITABLE MATERIAL FOUND ON-SITE DURING CONSTRUCTION SHALL BE DISPOSED OF OFF-SITE IN A MANNER APPROVED BY ALL AUTHORITIES HAVING JURISDICTION AND REPLACED WITH SUITABLE MATERIAL AS REQUIRED. ALL REMOVAL AND REPLACEMENT OF UNSUITABLE MATERIAL SHALL BE COMPLETED UNDER THE DIRECT SUPERVISION OF A GEOTECHNICAL ENGINEER.
9. ALL DEMOLITION AND/OR CONSTRUCTION WITHIN THE RIGHT-OF-WAY, INCLUDING STREETS AND SIDEWALKS, SHALL BE PERFORMED IN ACCORDANCE WITH THE TOWN OF NORTH CASTLE AND NYSDOT REQUIREMENTS.
10. ALL CONSTRUCTION/DEMOLITION DEBRIS NOT PROPOSED TO BE RECYCLED SHALL BE REMOVED AND LEGALLY DISPOSED OF OFF-SITE IN ACCORDANCE WITH THE REGULATIONS OF ALL LOCAL, STATE AND FEDERAL AGENCIES HAVING JURISDICTION.
11. EXISTING CONCRETE MAY BE STORED ON SITE, AND RECYCLED FOR USE AS COMPACTED FILL. ALL MATERIAL TO BE USED AS FILL SHALL BE APPROVED BY THE PROJECT GEOTECHNICAL ENGINEER.
12. PRIOR TO THE START OF SITE DEMOLITION, EROSION AND SEDIMENT CONTROL DEVICES SHALL BE INSTALLED IN ACCORDANCE WITH THE TOWN OF NORTH CASTLE, AS REQUIRED AND/OR DIRECTED BY THE TOWN OF NORTH CASTLE OR JMC.
13. EXISTING DRAINAGE PATTERNS ON SITE SHALL BE MAINTAINED TO THE MAXIMUM EXTENT PRACTICABLE.
14. ALL EXISTING UTILITY CASTINGS WHICH ARE TO REMAIN SHALL BE REMOVED AND RESET TO THE NEW PROPOSED GRADES IN ACCORDANCE WITH THE DIRECTIONS OF THE OWNER'S FIELD REPRESENTATIVE. EXISTING CASTINGS WHICH ARE DAMAGED OR UNFIT FOR INSTALLATION IN THE NEW CONSTRUCTION, AS DETERMINED BY THE OWNER'S FIELD REPRESENTATIVE, SHALL BE REPLACED.
15. ALL EXISTING SIDEWALKS, CURBS, PAVEMENT, ETC. TO REMAIN, WHICH ARE DISTURBED OR DAMAGED DUE TO THE NEW CONSTRUCTION, ARE TO BE REPLACED WITH MATERIALS CONSISTENT WITH EXISTING CONDITIONS.
16. THESE PLANS ARE TO BE PROVIDED TO BOTH THE DEMOLITION CONTRACTOR AND THE SITE CONTRACTOR FOR THEIR USE, INFORMATION AND COORDINATION. ANY QUESTIONS OF CONTRACTOR RESPONSIBILITY AND/OR SEPARATION OF WORK SHALL BE DIRECTED TO THE GENERAL CONTRACTOR IN WRITING PRIOR TO ISSUANCE OF BID.
17. THE OWNER SHALL RETAIN A LICENSED AND QUALIFIED PROFESSIONAL, CERTIFIED BY THE TOWN OF NORTH CASTLE, TO INSPECT FOR THE PRESENCE OF ASBESTOS AND/OR OTHER HAZARDOUS MATERIALS WITHIN DEMOLITION AREAS PRIOR TO THE COMMENCEMENT OF DEMOLITION. IF REMEDIATION IS REQUIRED, THE OWNER SHALL DO SO IN ACCORDANCE WITH THE TOWN OF NORTH CASTLE ASBESTOS RULES AND REGULATIONS AND/OR ANY AUTHORITIES HAVING JURISDICTION. THE CONTRACTOR SHALL PROVIDE ALL REQUIRED DOCUMENTATION TO THE TOWN OF NORTH CASTLE PRIOR TO OBTAINING A DEMOLITION PERMIT.
18. THE CONTRACTOR SHALL EXTERMINATE RODENTS AS REQUIRED BY THE TOWN OF NORTH CASTLE DEPARTMENT OF HEALTH AND MENTAL HYGIENE. A LETTER FROM THE HEALTH DEPARTMENT CERTIFYING THAT A LICENSED EXTERMINATOR HAS TREATED THE EXITING BUILDING SHALL BE PROVIDED TO THE TOWN OF NORTH CASTLE DEPARTMENT OF BUILDINGS.
19. PRIOR TO COMMENCEMENT OF DEMOLITION, THE CONTRACTOR MUST PROVIDE 24-HOUR NOTIFICATION TO THE TOWN OF NORTH CASTLE.
20. THE CONTRACTOR SHALL PROVIDE VERIFICATION TO THE TOWN OF NORTH CASTLE THAT FIVE (5) DAYS' PRIOR NOTIFICATION WAS GIVEN TO ALL ADJOINING OWNERS AND THAT NOTIFICATION WAS GIVEN TO THE APPROPRIATE COMMUNITY BOARD PRIOR TO THE COMMENCEMENT OF DEMOLITION.

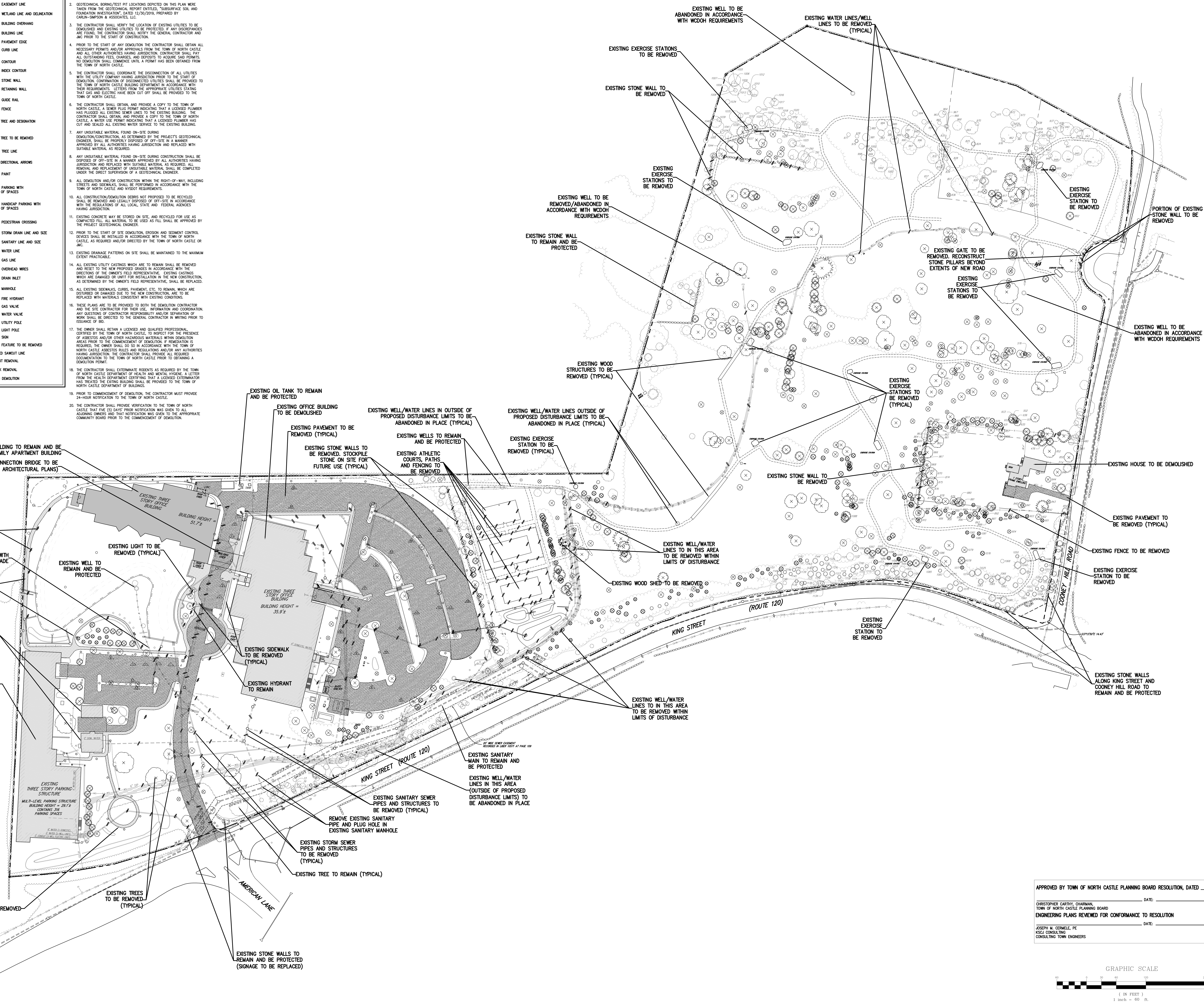

NOT FOR CONSTRUCTION

COPYRIGHT © 2023 by JMC. All Rights Reserved. No part of this document may be reproduced, stored in a retrieval system, or transmitted in any form or by any means, electronic, mechanical, photocopying, recording or otherwise, without the prior written permission of JMC PLANNING, ENGINEERING, LANDSCAPE ARCHITECTURE & LAND SURVEYING, PLLC | JMC SITE DEVELOPMENT CONSULTANTS, LLC | JOHN MEYER CONSULTING, INC. (JMC). Any modifications or alterations to this document without the written permission of JMC shall render them invalid and unusable.

No.	Revision	Date	By
1.	PLANNING BOARD SUBMISSION	10/06/2023	BMS
2.	PLANNING BOARD RESUBMISSION	11/10/2023	BMS
3.	PLANNING BOARD RESUBMISSION	12/21/2023	BMS

Previous Editions Obsolete

APPLICANT/OWNER:
AIRPORT CAMPUS I-V LLC
46 WESTCHESTER AVENUE
POUND RIDGE, NY 10576

JMC Planning, Engineering, Landscape Architecture & Land Surveying, PLLC
JMC Site Development Consultants, LLC
John Meyer Consulting, Inc.
120 BEDFORD ROAD • ARMONK, NY 10504
voice 914.273.5225 • fax 914.273.2102
www.jmcpllc.com

JMC

DEMOLITION PLAN

AIRPORT CAMPUS
113 KING STREET (NY ROUTE 120)
NORTH CASTLE, NY 10504

ANY ALTERATION OF PLANS, SPECIFICATIONS, PLATS AND REPORTS BEARING THE SEAL OF A LICENSED PROFESSIONAL ENGINEER OR LICENSED LAND SURVEYOR IS A VIOLATION OF ARTICLE 145 OF THE NEW YORK STATE EDUCATION LAW, EXCEPT AS PROVIDED FOR BY SECTION 7209, SUBSECTION 2.

APPROVED BY TOWN OF NORTH CASTLE PLANNING BOARD RESOLUTION, DATED ______

______ DATE: ______
CHRISTOPHER CARTHY, CHAIRMAN,
TOWN OF NORTH CASTLE PLANNING BOARD

ENGINEERING PLANS REVIEWED FOR CONFORMANCE TO RESOLUTION

______ DATE: ______
JOSEPH M. CERMELE, PE
KSCJ CONSULTING
CONSULTING TOWN ENGINEERS

STATE OF NEW YORK • DAVID P. LOMBARDI • 071001 • LICENSED PROFESSIONAL ENGINEER

Drawn: BMS		Approved: AG	
Scale:	1" = 60'		
Date:	10/06/2023		
Project No:	15072		
15072-DEMOLITION	DEMO	DEMO.scr	
Drawing No:	C-020		

GRAPHIC SCALE
60 0 30 60 120 240
(IN FEET)
1 inch = 60 ft.

LEGEND

- EXISTING PROPERTY LINE
- ADJACENT PROPERTY LINE
- EXISTING SETBACK LINE
- EXISTING EASEMENT LINE
- EXISTING ROADWAY CENTER LINE
- WLF-63 WLF-64 WLF-65 EXISTING WETLAND LINE AND DELINEATION
- EXISTING BUILDING OVERHANG
- EXISTING BUILDING LINE
- EXISTING PAVEMENT EDGE
- EXISTING CURB LINE
- EXISTING STONE WALL
- EXISTING RETAINING WALL
- EXISTING FENCE
- EXISTING TREE
- EXISTING TREE LINE
- EXISTING PAINT
- EXISTING PARKING WITH NUMBER OF SPACES
- EXISTING ACCESSIBLE PARKING WITH NUMBER OF SPACES
- EXISTING PEDESTRIAN CROSSING
- EXISTING UTILITY POLE
- EXISTING LIGHT POLE
- EXISTING SIGN
- PROPOSED SUBDIVISION LINE
- EXISTING BUILDING TO REMAIN
- PROPOSED BUILDING
- PROPOSED BUILDING SETBACK
- PROPOSED CONCRETE CURB
- PROPOSED DROP CURB & RAMP
- PROPOSED SAWCUT LINE
- PROPOSED ACCESSIBLE PARKING SPACES WITH NUMBER OF SPACES INDICATED (REFER TO STRIPING DETAILS) — 2H
- PROPOSED PARKING SPACES WITH NUMBER OF SPACES INDICATED (REFER TO STRIPING DETAILS) — 5
- PROPOSED CONCRETE SIDEWALK
- PROPOSED MONOLITHIC CONCRETE SIDEWALK & CURB
- PROPOSED PAVEMENT
- PROPOSED TOWNHOME PATIO
- PROPOSED TOWNHOME DECK
- PROPOSED MULCH HIKING/NATURE TRAIL
- PROPOSED CONCRETE
- PROPOSED IRREVOCABLE CONSERVATION EASEMENT
- PROPOSED RETAINING WALL (DESIGN BY OTHERS)
- PROPOSED FENCE
- PROPOSED 12" WIDE WHITE STOP LINE
- TRAFFIC SIGN LOCATION & DESIGNATION
- PROPOSED LIGHT POLE LOCATIONS
- PROPOSED HYDRANT

NOTES:

1. EXISTING CONDITIONS DEPICTED ON THIS PLAN HAVE BEEN TAKEN FROM SURVEY TITLED, "PARCEL COMPILATION SURVEY DEPICTING LAND OF MBA INSURANCE CORP.," PREPARED BY JOHN MEYER CONSULTING, DATED 09/30/2005 AND SUPPLEMENTED WITH SURVEY TITLED, "TOPOGRAPHIC SURVEY," PREPARED BY JMC PLANNING, ENGINEERING, LANDSCAPE ARCHITECTURE & LAND SURVEYING, PLLC, DATED 02/10/2022.
2. PROPOSED BUILDING FOOTPRINTS, PATIOS AND DECKS ARE SHOWN FOR ZONING AND ILLUSTRATIVE PURPOSES ONLY.

TOWNHOME UNIT SUMMARY

UNIT No.	MARKET/AFFH	UNIT TYPE	No. OF BEDROOMS	UNIT SIZE (S.F.)
1	MARKET	WALTERS / WILKERSON	3	2,728 - 2,967
2	MARKET	WALTERS / WILKERSON	3	2,728 - 2,967
3	MARKET	WALTERS / WILKERSON	3	2,728 - 2,967
4	MARKET	WALTERS / WILKERSON	3	2,728 - 2,967
5	MARKET	WALTERS / WILKERSON	3	2,728 - 2,967
6	MARKET	SAUNDERS / ATKINSON	3	2,681 - 2,796
7	MARKET	SAUNDERS / ATKINSON	3	2,681 - 2,796
8	MARKET	WALTERS / WILKERSON	3	2,728 - 2,967
9	MARKET	WALTERS / WILKERSON	3	2,728 - 2,967
10	MARKET	SAUNDERS / ATKINSON	3	2,681 - 2,796
11	MARKET	WALTERS / WILKERSON	3	2,728 - 2,967
12	MARKET	WALTERS / WILKERSON	3	2,728 - 2,967
13	MARKET	SAUNDERS / ATKINSON	3	2,681 - 2,796
14	MARKET	SAUNDERS / ATKINSON	3	2,681 - 2,796
15	MARKET	WALTERS / WILKERSON	3	2,728 - 2,967
16	MARKET	WALTERS / WILKERSON	3	2,728 - 2,967
17	MARKET	SAUNDERS / ATKINSON	3	2,681 - 2,796
18	MARKET	SAUNDERS / ATKINSON	3	2,681 - 2,796
19	MARKET	WALTERS / WILKERSON	3	2,728 - 2,967
20	MARKET	WALTERS / WILKERSON	3	2,728 - 2,967
21	MARKET	SAUNDERS / ATKINSON	3	2,681 - 2,796
22	MARKET	WALTERS / WILKERSON	3	2,728 - 2,967
23	MARKET	WALTERS / WILKERSON	3	2,728 - 2,967
24	MARKET	SAUNDERS / ATKINSON	3	2,681 - 2,796
25	MARKET	WALTERS / WILKERSON	3	2,728 - 2,967
26	MARKET	WALTERS / WILKERSON	3	2,728 - 2,967
27	MARKET	SAUNDERS / ATKINSON	3	2,681 - 2,796
28	MARKET	WALTERS / WILKERSON	3	2,728 - 2,967
29	MARKET	WALTERS / WILKERSON	3	2,728 - 2,967
30	MARKET	SAUNDERS / ATKINSON	3	2,681 - 2,796
31	MARKET	SAUNDERS / ATKINSON	3	2,681 - 2,796
32	MARKET	WALTERS / WILKERSON	3	2,728 - 2,967
33	MARKET	WALTERS / WILKERSON	3	2,728 - 2,967
34	MARKET	SAUNDERS / ATKINSON	3	2,681 - 2,796
35	MARKET	WALTERS / WILKERSON	3	2,728 - 2,967
36	AFFH	WELWYN	3	2,284
37	AFFH	WELWYN	3	2,284
38	AFFH	WELWYN	3	2,284
39	AFFH	WELWYN	3	2,284
40	MARKET	WALTERS / WILKERSON	3	2,728 - 2,967
41	MARKET	SAUNDERS / ATKINSON	3	2,681 - 2,796
42	MARKET	SAUNDERS / ATKINSON	3	2,681 - 2,796
43	MARKET	WALTERS / WILKERSON	3	2,728 - 2,967
44	MARKET	WALTERS / WILKERSON	3	2,728 - 2,967
45	MARKET	SAUNDERS / ATKINSON	3	2,681 - 2,796
46	MARKET	SAUNDERS / ATKINSON	3	2,681 - 2,796
47	MARKET	WALTERS / WILKERSON	3	2,728 - 2,967
48	MARKET	WALTERS / WILKERSON	3	2,728 - 2,967
49	MARKET	SAUNDERS / ATKINSON	3	2,681 - 2,796
50	MARKET	SAUNDERS / ATKINSON	3	2,681 - 2,796
51	MARKET	WALTERS / WILKERSON	3	2,728 - 2,967
52	MARKET	WALTERS / WILKERSON	3	2,728 - 2,967
53	MARKET	SAUNDERS / ATKINSON	3	2,681 - 2,796
54	MARKET	WALTERS / WILKERSON	3	2,728 - 2,967
55	MARKET	WALTERS / WILKERSON	3	2,728 - 2,967
56	MARKET	SAUNDERS / ATKINSON	3	2,681 - 2,796
57	MARKET	SAUNDERS / ATKINSON	3	2,681 - 2,796
58	MARKET	WALTERS / WILKERSON	3	2,728 - 2,967
59	MARKET	WALTERS / WILKERSON	3	2,728 - 2,967
60	MARKET	WALTERS / WILKERSON	3	2,728 - 2,967
61	MARKET	WALTERS / WILKERSON	3	2,728 - 2,967
62	MARKET	WALTERS / WILKERSON	3	2,728 - 2,967
63	MARKET	WALTERS / WILKERSON	3	2,728 - 2,967

TOWNHOME UNIT SUMMARY (CONTINUED)

UNIT No.	MARKET/AFFH	UNIT TYPE	No. OF BEDROOMS	UNIT SIZE (S.F.)
64	AFFH	WELWYN	3	2,284
65	AFFH	WELWYN	3	2,284
66	MARKET	WALTERS / WILKERSON	3	2,728 - 2,967
67	MARKET	WALTERS / WILKERSON	3	2,728 - 2,967
68	MARKET	WALTERS / WILKERSON	3	2,728 - 2,967
69	MARKET	WALTERS / WILKERSON	3	2,728 - 2,967
70	MARKET	WALTERS / WILKERSON	3	2,728 - 2,967
71	MARKET	WALTERS / WILKERSON	3	2,728 - 2,967
72	AFFH	WELWYN	3	2,284
73	AFFH	WELWYN	3	2,284
74	MARKET	WALTERS / WILKERSON	3	2,728 - 2,967
75	MARKET	WALTERS / WILKERSON	3	2,728 - 2,967
76	MARKET	SAUNDERS / ATKINSON	3	2,681 - 2,796
77	MARKET	WALTERS / WILKERSON	3	2,728 - 2,967
78	MARKET	WALTERS / WILKERSON	3	2,728 - 2,967
79	MARKET	SAUNDERS / ATKINSON	3	2,681 - 2,796
80	MARKET	WALTERS / WILKERSON	3	2,728 - 2,967
81	MARKET	WALTERS / WILKERSON	3	2,728 - 2,967
82	MARKET	SAUNDERS / ATKINSON	3	2,681 - 2,796
83	MARKET	WALTERS / WILKERSON	3	2,728 - 2,967
84	MARKET	WALTERS / WILKERSON	3	2,728 - 2,967
85	MARKET	SAUNDERS / ATKINSON	3	2,681 - 2,796
86	MARKET	WALTERS / WILKERSON	3	2,728 - 2,967
87	MARKET	WALTERS / WILKERSON	3	2,728 - 2,967
88	MARKET	SAUNDERS / ATKINSON	3	2,681 - 2,796
89	MARKET	WALTERS / WILKERSON	3	2,728 - 2,967
90	MARKET	WALTERS / WILKERSON	3	2,728 - 2,967
91	MARKET	SAUNDERS / ATKINSON	3	2,681 - 2,796
92	MARKET	WALTERS / WILKERSON	3	2,728 - 2,967
93	MARKET	WALTERS / WILKERSON	3	2,728 - 2,967
94	MARKET	SAUNDERS / ATKINSON	3	2,681 - 2,796
95	MARKET	SAUNDERS / ATKINSON	3	2,681 - 2,796
96	MARKET	WALTERS / WILKERSON	3	2,728 - 2,967
97	MARKET	WALTERS / WILKERSON	3	2,728 - 2,967
98	MARKET	SAUNDERS / ATKINSON	3	2,681 - 2,796
99	MARKET	WALTERS / WILKERSON	3	2,728 - 2,967
100	MARKET	WALTERS / WILKERSON	3	2,728 - 2,967
101	MARKET	SAUNDERS / ATKINSON	3	2,681 - 2,796
102	MARKET	WALTERS / WILKERSON	3	2,728 - 2,967
103	MARKET	WALTERS / WILKERSON	3	2,728 - 2,967
104	MARKET	WALTERS / WILKERSON	3	2,728 - 2,967
105	MARKET	WALTERS / WILKERSON	3	2,728 - 2,967
106	MARKET	WALTERS / WILKERSON	3	2,728 - 2,967
107	MARKET	WALTERS / WILKERSON	3	2,728 - 2,967
108	MARKET	WALTERS / WILKERSON	3	2,728 - 2,967
109	AFFH	WALTERS / WILKERSON	3	2,728 - 2,967
110	MARKET	WELWYN	3	2,284
111	MARKET	WALTERS / WILKERSON	3	2,728 - 2,967
112	AFFH	WALTERS / WILKERSON	3	2,728 - 2,967
113	MARKET	WELWYN	3	2,284
114	MARKET	WALTERS / WILKERSON	3	2,728 - 2,967
115	MARKET	WALTERS / WILKERSON	3	2,728 - 2,967
116	MARKET	SAUNDERS / ATKINSON	3	2,681 - 2,796
117	MARKET	WALTERS / WILKERSON	3	2,728 - 2,967
118	MARKET	WALTERS / WILKERSON	3	2,728 - 2,967
119	MARKET	WALTERS / WILKERSON	3	2,728 - 2,967
120	MARKET	WALTERS / WILKERSON	3	2,728 - 2,967
121	AFFH	WELWYN	3	2,284
122	MARKET	WALTERS / WILKERSON	3	2,728 - 2,967
123	MARKET	WALTERS / WILKERSON	3	2,728 - 2,967
124	AFFH	WELWYN	3	2,284
125	MARKET	WALTERS / WILKERSON	3	2,728 - 2,967

APARTMENT UNIT SUMMARY

UNIT No.	MARKET/AFFH	UNIT TYPE	No. OF BEDROOMS	UNIT SIZE (S.F.)
101	MARKET	C9	2	1,517
102	MARKET	C9	2	1,517
103	MARKET	C10	2	1,560
104	MARKET	C6	2	1,497
105	MARKET	C8	2	1,506
106	MARKET	B4	1	1,400
107	MARKET	B5	1	1,541
108	MARKET	B5	1	1,541
109	MARKET	B2	1	1,164
110	AFFH	C1	2	1,234
111	MARKET	C9M3	2	1,460
201	MARKET	C9	2	1,517
202	MARKET	C9	2	1,517
203	MARKET	C10	2	1,560
204	MARKET	C6	2	1,497
205	MARKET	C8	2	1,506
206	MARKET	C11	2	1,500
207	MARKET	B5	1	1,541
208	MARKET	B5	1	1,541
209	MARKET	B3	1	1,362
210	MARKET	B1	1	1,099
211	AFFH	C1	2	1,234
212	AFFH	A1	1	1,126
213	MARKET	C7	2	1,318
214	MARKET	C9M2	2	1,748
301	MARKET	C9	2	1,517
302	MARKET	C9	2	1,517
303	MARKET	C10	2	1,560
304	MARKET	C6	2	1,497
305	MARKET	C8	2	1,506
306	MARKET	C11	2	1,500
307	MARKET	B5	1	1,541
308	MARKET	B5	1	1,541
309	MARKET	B3	1	1,362
310	MARKET	B1	1	1,099
311	AFFH	C1	2	1,234
312	MARKET	C2	2	1,391
313	MARKET	C9M1	2	1,852
314	MARKET	C9M2	2	1,748
401	MARKET	C4	2	1,414
402	MARKET	C3	2	1,312
403	MARKET	C5	2	1,427
404	MARKET	C5	2	1,427

No.	Revision	Date	By
1.	REVISED FEIS	01/20/2023	BMS
2.	PLANNING BOARD SUBMISSION	10/06/2023	BMS
3.	TOWN CONSERVATION BOARD SUBMISSION	10/31/2023	BMS
4.	PLANNING BOARD RESUBMISSION	11/10/2023	BMS
5.	TOWN CONSERVATION BOARD	12/06/2023	BMS
6.	PLANNING BOARD RESUBMISSION	12/21/2023	BMS

Previous Editions Obsolete

APPLICANT/OWNER:

AIRPORT CAMPUS I-V LLC
40 WESTCHESTER AVENUE
POUND RIDGE, NY 10576

JMC Planning, Engineering, Landscape Architecture & Land Surveying, PLLC
JMC Site Development Consultants, LLC
John Meyer Consulting, Inc.
120 BEDFORD ROAD • ARMONK, NY 10504
voice 914.273.5225 • fax 914.273.2102
www.jmcpllc.com

OVERALL LAYOUT PLAN

AIRPORT CAMPUS
113 KING STREET (NY ROUTE 120)
NORTH CASTLE, NY 10504

ANY ALTERATION OF PLANS, SPECIFICATIONS, PLATS AND REPORTS BEARING THE SEAL OF A LICENSED PROFESSIONAL ENGINEER OR LICENSED LAND SURVEYOR IS A VIOLATION OF SECTION 7209 OF THE NEW YORK STATE EDUCATION LAW, EXCEPT AS PROVIDED FOR BY SECTION 7209, SUBSECTION 2.

APPROVED BY TOWN OF NORTH CASTLE PLANNING BOARD RESOLUTION, DATED _____

_____ DATE: _____
CHRISTOPHER CARTHY, CHAIRMAN,
TOWN OF NORTH CASTLE PLANNING BOARD

ENGINEERING PLANS REVIEWED FOR CONFORMANCE TO RESOLUTION

_____ DATE: _____
JOSEPH M. CERMELE, PE
KSCJ CONSULTING
CONSULTING TOWN ENGINEERS

STATE OF NEW YORK • DAVID P. LOMBARDI • 071001 • LICENSED PROFESSIONAL ENGINEER

GRAPHIC SCALE
60 0 30 60 120 240
(IN FEET)
1 inch = 60 ft.

Drawn:	BMS	Approved:	AG
Scale:	1" = 60'		
Date:	09/21/2023		
Project No:	15072		
15072-LAYOUT	C-100		LAY.scr
Drawing No:	C-100		

NOT FOR CONSTRUCTION

COPYRIGHT © 2023 by JMC All Rights Reserved. No part of this document may be reproduced, stored in a retrieval system, or transmitted, in any form or by means, electronic, mechanical, photocopying, recording or otherwise, without the prior written permission of JMC PLANNING, ENGINEERING, LANDSCAPE ARCHITECTURE & LAND SURVEYING, PLLC (JMC). Any modifications or alterations to this document without the written permission of JMC shall render them invalid and unusable.

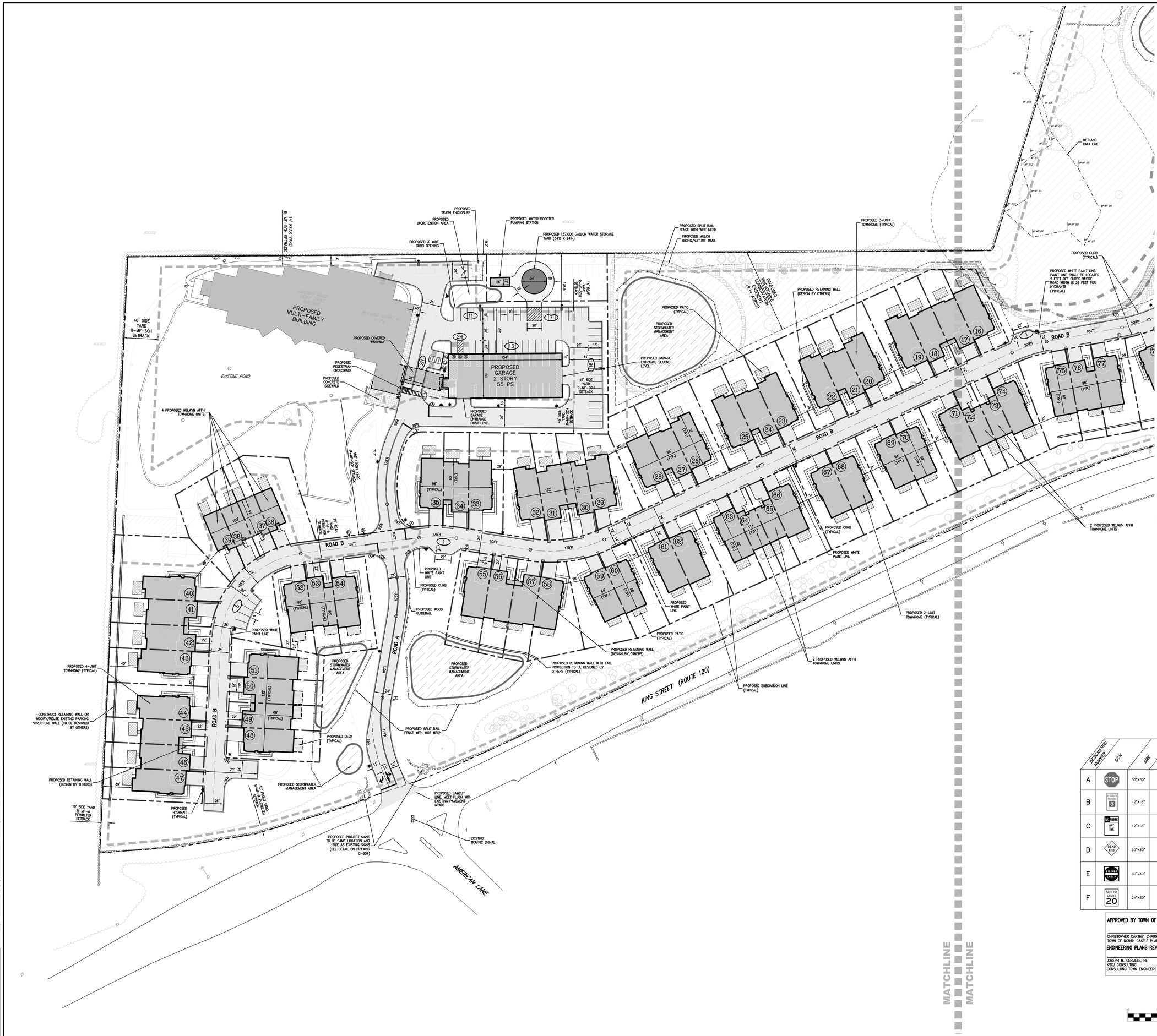

LEGEND

- EXISTING PROPERTY LINE
- ADJACENT PROPERTY LINE
- EXISTING SETBACK LINE
- EXISTING EASEMENT LINE
- EXISTING ROADWAY CENTER LINE
- EXISTING WETLAND LINE AND DELINEATION
- EXISTING BUILDING OVERHANG
- EXISTING BUILDING LINE
- EXISTING PAVEMENT EDGE
- EXISTING CURB LINE
- EXISTING STONE WALL
- EXISTING RETAINING WALL
- EXISTING FENCE
- EXISTING TREE
- EXISTING TREE LINE
- EXISTING PAINT
- EXISTING PARKING WITH NUMBER OF SPACES
- EXISTING ACCESSIBLE PARKING WITH NUMBER OF SPACES
- EXISTING PEDESTRIAN CROSSING
- EXISTING UTILITY POLE
- EXISTING LIGHT POLE
- EXISTING SIGN
- PROPOSED SUBDIVISION LINE
- EXISTING BUILDING TO REMAIN
- PROPOSED BUILDING
- PROPOSED BUILDING SETBACK
- PROPOSED CONCRETE CURB
- PROPOSED DROP CURB & RAMP
- PROPOSED SAWCUT LINE
- PROPOSED ACCESSIBLE PARKING SPACES WITH NUMBER OF SPACES INDICATED (REFER TO STRIPING DETAILS)
- PROPOSED PARKING SPACES WITH NUMBER OF SPACES INDICATED (REFER TO STRIPING DETAILS)
- PROPOSED CONCRETE SIDEWALK
- PROPOSED MONOLITHIC CONCRETE SIDEWALK & CURB
- PROPOSED PAVEMENT
- PROPOSED TOWNHOME PATIO
- PROPOSED TOWNHOME DECK
- PROPOSED MULCH HIKING/NATURE TRAIL
- PROPOSED CONCRETE
- PROPOSED IRREVOCABLE CONSERVATION EASEMENT
- PROPOSED RETAINING WALL (DESIGN BY OTHERS)
- PROPOSED FENCE
- PROPOSED 12" WIDE WHITE STOP LINE
- TRAFFIC SIGN LOCATION & DESIGNATION
- PROPOSED LIGHT POLE LOCATIONS
- PROPOSED HYDRANT

NOTES:

1. EXISTING CONDITIONS DEPICTED ON THIS PLAN HAVE BEEN TAKEN FROM SURVEY TITLED, "PARCEL COMPILATION SURVEY DEPICTING LAND OF MBIA INSURANCE CORP.," PREPARED BY JOHN MEYER CONSULTING, DATED 09/30/2005 AND SUPPLEMENTED WITH SURVEY TITLED, "TOPOGRAPHIC SURVEY," PREPARED BY JMC PLANNING, ENGINEERING, LANDSCAPE ARCHITECTURE & LAND SURVEYING, PLLC, DATED 02/10/2022.
2. PROPOSED BUILDING FOOTPRINTS, PATIOS AND DECKS ARE SHOWN FOR ZONING AND ILLUSTRATIVE PURPOSES ONLY.

SIGN TABLE

DESIGNATION NUMBER	SIGN	SIZE	DESCRIPTION	MOUNTING TYPE	MOUNTING HEIGHT	REGULATORY	REFLECTORIZED
A	STOP	30"X30"	WHITE ON RED	STEEL CHANNEL	7'-0"	R1-1	X
B	RESERVED PARKING	12"X18"	GREEN & BLUE ON WHITE	STEEL CHANNEL	7'-0"	R7-8	X
C	NO PARKING ANY TIME	12"X18"	RED ON WHITE	STEEL CHANNEL	7'-0"	NYP1-2	X
D	DEAD END	30"X30"	YELLOW ON WHITE	STEEL CHANNEL	7'-0"	W14-1	X
E	ONE WAY	30"x30"	RED ON WHITE	STEEL CHANNEL	7'-0"	R5-1	X
F	SPEED LIMIT 20	24"X30"	BLACK ON WHITE	STEEL CHANNEL	7'-0"	R2-1	X

APPROVED BY TOWN OF NORTH CASTLE PLANNING BOARD RESOLUTION, DATED _____

_____ DATE: _____
CHRISTOPHER CARTHY, CHAIRMAN,
TOWN OF NORTH CASTLE PLANNING BOARD

ENGINEERING PLANS REVIEWED FOR CONFORMANCE TO RESOLUTION

_____ DATE: _____
JOSEPH M. CERMELE, PE
KSCJ CONSULTING
CONSULTING TOWN ENGINEERS

GRAPHIC SCALE
40 0 20 40 80 160
(IN FEET)
1 inch = 40 ft.

No.	Revision	Date	By
1.	REVISED FEES	01/20/2023	BMS
2.	PLANNING BOARD SUBMISSION	10/06/2023	BMS
3.	PLANNING BOARD RESUBMISSION	11/10/2023	BMS
4.	ARB SUBMISSION	11/22/2023	BMS
5.	PLANNING BOARD RESUBMISSION	12/21/2023	BMS

Previous Editions Obsolete

APPLICANT/OWNER:

AIRPORT CAMPUS I-V LLC
POINT NORCHESTER AVENUE
POUND RIDGE, NY 10576

JMC Planning, Engineering, Landscape Architecture & Land Surveying, PLLC
JMC Site Development Consultants, LLC
John Meyer Consulting, Inc.
120 BEDFORD ROAD - ARMONK, NY 10504
voice 914.273.5225 - fax 914.273.2102
www.jmcpllc.com

LAYOUT PLAN

AIRPORT CAMPUS
113 KING STREET (NY ROUTE 120)
NORTH CASTLE, NY 10504

ANY ALTERATION OF PLANS, SPECIFICATIONS, PLATS AND REPORTS BEARING THE SEAL OF A LICENSED PROFESSIONAL ENGINEER OR LICENSED LAND SURVEYOR IS A VIOLATION OF SECTION 7209 OF THE NEW YORK STATE EDUCATION LAW, EXCEPT AS PROVIDED FOR BY SECTION 7209, SUBSECTION 2.

STATE OF NEW YORK · DAVID P. LOMBARDI · 071051 · LICENSED PROFESSIONAL ENGINEER

Drawn:	BMS	Approved:	AG
Scale:	1" = 40'		
Date:	09/21/2023		
Project No:	15072		
15072-LAYOUT	C-101	LAY.scr	
Drawing No:	C-101		

NOT FOR CONSTRUCTION

COPYRIGHT © 2023 by JMC All Rights Reserved. No part of this document may be reproduced, stored in a retrieval system, or transmitted, in any form or by means, electronic, mechanical, photocopying, recording or otherwise, without the prior written permission of JMC PLANNING, ENGINEERING, LANDSCAPE ARCHITECTURE & LAND SURVEYING, PLLC | JMC SITE DEVELOPMENT CONSULTANTS, LLC | JOHN MEYER CONSULTING, INC. (JMC). Any modifications or alterations to this document without the written permission of JMC shall render them invalid and unusable.

LEGEND

- EXISTING PROPERTY LINE
- ADJACENT PROPERTY LINE
- EXISTING SETBACK LINE
- EXISTING EASEMENT LINE
- EXISTING ROADWAY CENTER LINE
- WLF-63 WLF-64 WLF-65 EXISTING WETLAND LINE AND DELINEATION
- EXISTING BUILDING OVERHANG
- EXISTING BUILDING LINE
- EXISTING PAVEMENT EDGE
- EXISTING CURB LINE
- EXISTING STONE WALL
- EXISTING RETAINING WALL
- EXISTING FENCE
- EXISTING TREE
- EXISTING TREE LINE
- EXISTING PAINT
- EXISTING PARKING WITH NUMBER OF SPACES
- EXISTING ACCESSIBLE PARKING WITH NUMBER OF SPACES
- EXISTING PEDESTRIAN CROSSING
- EXISTING UTILITY POLE
- EXISTING LIGHT POLE
- EXISTING SIGN
- PROPOSED SUBDIVISION LINE
- EXISTING BUILDING TO REMAIN
- PROPOSED BUILDING
- PROPOSED BUILDING SETBACK
- PROPOSED CONCRETE CURB
- PROPOSED DROP CURB & RAMP
- PROPOSED SAWCUT LINE
- PROPOSED ACCESSIBLE PARKING SPACES WITH NUMBER OF SPACES INDICATED (REFER TO STRIPING DETAILS)
- PROPOSED PARKING SPACES WITH NUMBER OF SPACES INDICATED (REFER TO STRIPING DETAILS)
- PROPOSED CONCRETE SIDEWALK
- PROPOSED MONOLITHIC CONCRETE SIDEWALK & CURB
- PROPOSED PAVEMENT
- PROPOSED TOWNHOME PATIO
- PROPOSED TOWNHOME DECK
- PROPOSED MULCH HIKING/NATURE TRAIL
- PROPOSED CONCRETE
- PROPOSED IRREVOCABLE CONSERVATION EASEMENT
- PROPOSED RETAINING WALL (DESIGN BY OTHERS)
- PROPOSED FENCE
- PROPOSED 12" WIDE WHITE STOP LINE
- TRAFFIC SIGN LOCATION & DESIGNATION
- PROPOSED LIGHT POLE LOCATIONS
- PROPOSED HYDRANT

NOTES:

1. EXISTING CONDITIONS DEPICTED ON THIS PLAN HAVE BEEN TAKEN FROM SURVEY TITLED, "PARCEL COMPILATION SURVEY DEPICTING LAND OF MBIA INSURANCE CORP.," PREPARED BY JOHN MEYER CONSULTING, DATED 09/30/2005 AND SUPPLEMENTED WITH SURVEY TITLED, "TOPOGRAPHIC SURVEY," PREPARED BY JMC PLANNING, ENGINEERING, LANDSCAPE ARCHITECTURE & LAND SURVEYING, PLLC, DATED 02/10/2022.
2. PROPOSED BUILDING FOOTPRINTS, PATIOS AND DECKS ARE SHOWN FOR ZONING AND ILLUSTRATIVE PURPOSES ONLY.

SIGN TABLE

DESIGNATION NUMBER	SIGN	SIZE	DESCRIPTION	MOUNTING TYPE	MOUNTING HEIGHT	REGULATORY	RETROREFLECTIVE
A	STOP	30"X30"	WHITE ON RED	STEEL CHANNEL	7'-0"	R1-1	X
B	RESERVED PARKING 3	12"X18"	GREEN & BLUE ON WHITE	STEEL CHANNEL	7'-0"	R7-8	X
C	NO PARKING ANY TIME	12"X18"	RED ON WHITE	STEEL CHANNEL	7'-0"	NYP1-2	X
D	DEAD END	30"X30"	YELLOW ON WHITE	STEEL CHANNEL	7'-0"	W14-1	X
E	ONE WAY	30"x30"	RED ON WHITE	STEEL CHANNEL	7'-0"	R5-1	X
F	SPEED LIMIT 20	24"X30"	BLACK ON WHITE	STEEL CHANNEL	7'-0"	R2-1	X

APPROVED BY TOWN OF NORTH CASTLE PLANNING BOARD RESOLUTION, DATED _____

_____ DATE: _____
CHRISTOPHER CARTHY, CHAIRMAN,
TOWN OF NORTH CASTLE PLANNING BOARD

ENGINEERING PLANS REVIEWED FOR CONFORMANCE TO RESOLUTION

_____ DATE: _____
JOSEPH M. CERMELE, PE
KSCJ CONSULTING
CONSULTING TOWN ENGINEERS

GRAPHIC SCALE
40 0 20 40 80 160
(IN FEET)
1 inch = 40 ft.

No.	Revision	Date	By
1.	REVISED TEIS	01/20/2023	BMS
2.	PLANNING BOARD SUBMISSION	10/06/2023	BMS
3.	PLANNING BOARD RESUBMISSION	11/10/2023	BMS
4.	ARB SUBMISSION	11/22/2023	BMS
5.	PLANNING BOARD RESUBMISSION	12/21/2023	BMS

Previous Editions Obsolete

APPLICANT/OWNER:

AIRPORT CAMPUS I-V LLC
40 WESTCHESTER AVENUE
POUND RIDGE, NY 10576

JMC Planning, Engineering, Landscape Architecture & Land Surveying, PLLC
JMC Site Development Consultants, LLC
John Meyer Consulting, Inc.
120 BEDFORD ROAD • ARMONK, NY 10504
voice 914.273.5225 • fax 914.273.2102
www.jmcpllc.com

LAYOUT PLAN

AIRPORT CAMPUS
113 KING STREET (NY ROUTE 120)
NORTH CASTLE, NY 10504

ANY ALTERATION OF PLANS, SPECIFICATIONS, PLATS AND REPORTS BEARING THE SEAL OF A LICENSED PROFESSIONAL ENGINEER OR LICENSED LAND SURVEYOR IS A VIOLATION OF SECTION 7209 OF THE NEW YORK STATE EDUCATION LAW, EXCEPT AS PROVIDED FOR BY SECTION 7209, SUBSECTION 2.

STATE OF NEW YORK • MARK P. LOMBARDI • 087807 • LICENSED PROFESSIONAL ENGINEER

Drawn:	BMS	Approved:	AG
Scale:	1" = 40'		
Date:	09/21/2023		
Project No:	15072		
15072-LAYOUT	C-102	LAY.scr	
Drawing No:	C-102		

NOT FOR CONSTRUCTION

COPYRIGHT © 2023 by JMC All Rights Reserved. No part of this document may be reproduced, stored in a retrieval system, or transmitted, in any form or by means, electronic, mechanical, photocopying, recording or otherwise, without the prior written permission of JMC PLANNING, ENGINEERING, LANDSCAPE ARCHITECTURE & LAND SURVEYING, PLLC (JMC). Any modifications or alterations to this document without the written permission of JMC shall render them invalid and unusable.

LEGEND

- EXISTING PROPERTY LINE
- ADJACENT PROPERTY LINE
- EXISTING SETBACK LINE
- EXISTING WETLAND LINE AND DELINEATION (WF-63, WF-64, WF-65)
- EXISTING BUILDING OVERHANG
- EXISTING BUILDING LINE
- EXISTING PAVEMENT EDGE
- EXISTING CURB LINE
- EXISTING STONE WALL
- EXISTING RETAINING WALL
- EXISTING GUIDE RAIL
- EXISTING FENCE
- EXISTING DIRECTIONAL ARROWS
- EXISTING PAINT
- EXISTING PARKING WITH NUMBER OF SPACES
- EXISTING ACCESSIBLE PARKING WITH NUMBER OF SPACES
- EXISTING PEDESTRIAN CROSSING
- EXISTING UTILITY POLE
- EXISTING LIGHT POLE
- EXISTING SIGN
- PROPOSED BUILDING LINE
- PROPOSED CONCRETE CURB
- PROPOSED SAWCUT LINE
- PROPOSED ACCESSIBLE PARKING SPACES WITH NUMBER OF SPACES INDICATED (REFER TO STRIPING DETAILS) (2H)
- PROPOSED PARKING SPACES WITH NUMBER OF SPACES INDICATED (REFER TO STRIPING DETAILS) (5)
- PROPOSED CONCRETE SIDEWALK
- PROPOSED DROP CURB AND RAMP
- PROPOSED HEAVY DUTY PAVEMENT
- PROPOSED CONCRETE APRON
- PROPOSED RETAINING WALL (DESIGN BY OTHERS)
- PROPOSED GUIDE RAIL
- PROPOSED DOUBLE ARM LIGHTING STANDARD (DESIGN BY OTHERS)
- PROPOSED SINGLE ARM LIGHTING STANDARD (DESIGN BY OTHERS)
- PROPOSED 12" WIDE WHITE STOP LINE
- ONLY — PROPOSED WORD MARKING ON PAVEMENT
- TRAFFIC SIGN LOCATION & DESIGNATION
- PEDESTRIAN CROSSING
- EXISTING TREES TO BE REMOVED
- EXISTING TREES TO REMAIN (579, 478)

NOTES:

1. EXISTING CONDITIONS DEPICTED ON THIS PLAN HAVE BEEN TAKEN FROM SURVEY TITLED, "PARCEL COMPILATION SURVEY DEPICTING LAND OF MBIA INSURANCE CORP.," PREPARED BY JOHN MEYER CONSULTING, DATED 09/30/2000 AND SUPPLEMENTED WITH SURVEY TITLED, "TOPOGRAPHIC SURVEY," PREPARED BY JMC PLANNING, ENGINEERING, LANDSCAPE ARCHITECTURE & LAND SURVEYING, PLLC, DATED 02/10/2022.
2. EXISTING TREES DEPICTED HEREON ARE BASED ON A FIELD SURVEY PERFORMED BY JMC PLANNING, ENGINEERING, LANDSCAPE ARCHITECTURE & LAND SURVEYING, PLLC, IN MARCH, 2019, SUPPLEMENTED WITH ADDITIONAL TREE SURVEY, DATED 10/31/2022.

APPROVED BY TOWN OF NORTH CASTLE PLANNING BOARD RESOLUTION, DATED _____

_____ DATE: _____
CHRISTOPHER CARTHY, CHAIRMAN,
TOWN OF NORTH CASTLE PLANNING BOARD

ENGINEERING PLANS REVIEWED FOR CONFORMANCE TO RESOLUTION

_____ DATE: _____
JOSEPH M. CERMELE, PE
KSCJ CONSULTING
CONSULTING TOWN ENGINEERS

GRAPHIC SCALE
40 0 20 40 80 160
(IN FEET)
1 inch = 40 ft.

No.	Revision	Date	By
1.	REVISED FEIS	01/20/2023	BMS
2.	PLANNING BOARD SUBMISSION	10/06/2023	BMS
3.	TOWN CONSERVATION BOARD SUBMISSION	10/31/2023	BMS
4.	PLANNING BOARD RESUBMISSION	11/10/2023	BMS
5.	PLANNING BOARD RESUBMISSION	12/21/2023	BMS

Previous Editions Obsolete

APPLICANT/OWNER:
AIRPORT CAMPUS I-V LLC
46 WESTCHESTER AVENUE
POUND RIDGE, NY 10576

JMC Planning, Engineering, Landscape Architecture & Land Surveying, PLLC
JMC Site Development Consultants, LLC
John Meyer Consulting, Inc.
120 BEDFORD ROAD • ARMONK, NY 10504
voice 914.273.5225 • fax 914.273.2102
www.jmcpllc.com

TREE PROTECTION PLAN

AIRPORT CAMPUS
113 KING STREET (NY ROUTE 120)
NORTH CASTLE, NY 10504

ANY ALTERATION OF PLANS, SPECIFICATIONS, PLATS AND REPORTS BEARING THE SEAL OF A LICENSED PROFESSIONAL ENGINEER OR LICENSED LAND SURVEYOR IS A VIOLATION OF ARTICLE 145 OF THE NEW YORK STATE EDUCATION LAW, EXCEPT AS PROVIDED FOR BY SECTION 7209, SUBSECTION 2.

STATE OF NEW YORK · DAVID P. LOMBARDI · 071001 · LICENSED PROFESSIONAL ENGINEER

Drawn:	BMS	Approved:	AG
Scale:	1" = 40'		
Date:	09/21/2022		
Project No:	15072		
15072-TREE	C-151	TREE.scr	
Drawing No:	C-151		

NOT FOR CONSTRUCTION

COPYRIGHT © 2023 by JMC All Rights Reserved. No part of this document may be reproduced, stored in a retrieval system, or transmitted, in any form or by means, electronic, mechanical, photocopying, recording or otherwise, without the prior written permission of JMC PLANNING, ENGINEERING, LANDSCAPE ARCHITECTURE & LAND SURVEYING, PLLC (JMC). Any modifications or alterations to this document without the written permission of JMC shall render them invalid and unusable.

LEGEND

- EXISTING PROPERTY LINE
- ADJACENT PROPERTY LINE
- EXISTING SETBACK LINE
- WLF-63 WLF-64 WLF-65 EXISTING WETLAND LINE AND DELINEATION
- EXISTING BUILDING OVERHANG
- EXISTING BUILDING LINE
- EXISTING PAVEMENT EDGE
- EXISTING CURB LINE
- EXISTING STONE WALL
- EXISTING RETAINING WALL
- EXISTING GUIDE RAIL
- EXISTING FENCE
- EXISTING DIRECTIONAL ARROWS
- EXISTING PAINT
- 5 EXISTING PARKING WITH NUMBER OF SPACES
- 2H EXISTING ACCESSIBLE PARKING WITH NUMBER OF SPACES
- EXISTING PEDESTRIAN CROSSING
- EXISTING UTILITY POLE
- EXISTING LIGHT POLE
- EXISTING SIGN
- PROPOSED BUILDING LINE
- PROPOSED CONCRETE CURB
- PROPOSED SAWCUT LINE
- 2H PROPOSED ACCESSIBLE PARKING SPACES WITH NUMBER OF SPACES INDICATED (REFER TO STRIPING DETAILS)
- 5 PROPOSED PARKING SPACES WITH NUMBER OF SPACES INDICATED (REFER TO STRIPING DETAILS)
- PROPOSED CONCRETE SIDEWALK
- PROPOSED DROP CURB AND RAMP
- PROPOSED HEAVY DUTY PAVEMENT
- PROPOSED CONCRETE APRON
- PROPOSED RETAINING WALL (DESIGN BY OTHERS)
- PROPOSED GUIDE RAIL
- PROPOSED DOUBLE ARM LIGHTING STANDARD (DESIGN BY OTHERS)
- PROPOSED SINGLE ARM LIGHTING STANDARD (DESIGN BY OTHERS)
- PROPOSED 12" WIDE WHITE STOP LINE
- ONLY PROPOSED WORD MARKING ON PAVEMENT
- A TRAFFIC SIGN LOCATION & DESIGNATION
- PEDESTRIAN CROSSING
- EXISTING TREES TO BE REMOVED
- 519 478 EXISTING TREES TO REMAIN

NOTES:

1. EXISTING CONDITIONS DEPICTED ON THIS PLAN HAVE BEEN TAKEN FROM SURVEY TITLED, "PARCEL COMPILATION SURVEY DEPICTING LAND OF MBA INSURANCE CORP.," PREPARED BY JOHN MEYER CONSULTING, DATED 09/30/2005 AND SUPPLEMENTED WITH SURVEY TITLED, "TOPOGRAPHIC SURVEY," PREPARED BY JMC PLANNING, ENGINEERING, LANDSCAPE ARCHITECTURE & LAND SURVEYING, PLLC, DATED 02/10/2022.
2. EXISTING TREES DEPICTED HEREON ARE BASED ON A FIELD SURVEY PERFORMED BY JMC PLANNING, ENGINEERING, LANDSCAPE ARCHITECTURE & LAND SURVEYING, PLLC, IN MARCH, 2019, SUPPLEMENTED WITH ADDITIONAL TREE SURVEY, DATED 10/31/2022.

APPROVED BY TOWN OF NORTH CASTLE PLANNING BOARD RESOLUTION, DATED _____

_____ DATE: _____
CHRISTOPHER CARTHY, CHAIRMAN,
TOWN OF NORTH CASTLE PLANNING BOARD

ENGINEERING PLANS REVIEWED FOR CONFORMANCE TO RESOLUTION

_____ DATE: _____
JOSEPH M. CERMELE, PE
KSCJ CONSULTING
CONSULTING TOWN ENGINEERS

GRAPHIC SCALE
40 0 20 40 80 160
(IN FEET)
1 inch = 40 ft.

No.	Revision	Date	By
1.	REVISED FEIS	01/20/2023	BMS
2.	PLANNING BOARD SUBMISSION	10/06/2023	BMS
3.	TOWN CONSERVATION BOARD SUBMISSION	10/31/2023	BMS
4.	PLANNING BOARD RESUBMISSION	11/10/2023	BMS
5.	PLANNING BOARD RESUBMISSION	12/21/2023	BMS

Previous Editions Obsolete

APPLICANT/OWNER:
AIRPORT CAMPUS I-V LLC
46 WESTCHESTER AVENUE
POUND RIDGE, NY 10576

JMC Planning, Engineering, Landscape Architecture & Land Surveying, PLLC
JMC Site Development Consultants, LLC
John Meyer Consulting, Inc.
120 BEDFORD ROAD • ARMONK, NY 10504
voice 914.273.5225 • fax 914.273.2102
www.jmcpllc.com

TREE PROTECTION PLAN

AIRPORT CAMPUS
113 KING STREET (NY ROUTE 120)
NORTH CASTLE, NY 10504

ANY ALTERATION OF PLANS, SPECIFICATIONS, PLATS AND REPORTS BEARING THE SEAL OF A LICENSED PROFESSIONAL ENGINEER OR LICENSED LAND SURVEYOR IS A VIOLATION OF ARTICLE 145 OF THE NEW YORK STATE EDUCATION LAW, EXCEPT AS PROVIDED FOR BY SECTION 7209, SUBSECTION 2.

STATE OF NEW YORK • DAVID P. LOMBARDI • 071001 • LICENSED PROFESSIONAL ENGINEER

Drawn:	BMS	Approved:	AG
Scale:	1" = 40'		
Date:	09/21/2022		
Project No:	15072		
15072-TREE	C-152	TREE.scr	
Drawing No:	C-152		

NOT FOR CONSTRUCTION

COPYRIGHT © 2023 by JMC All Rights Reserved. No part of this document may be reproduced, stored in a retrieval system, or transmitted in any form or by means, electronic, mechanical, photocopying, recording or otherwise, without the prior written permission of JMC PLANNING, ENGINEERING, LANDSCAPE ARCHITECTURE & LAND SURVEYING, PLLC (JMC). This document is transferred to the recipient for a specific purpose and is not to be reused for any other purpose, or modified for use by persons other than the recipient, without written authorization by JMC.

TREE TABLE - PART A

1,091 EXISTING TREES DESIGNATED HAVING A DIAMETER AT DBH OF 8" OR GREATER WITHIN THE SURVEYED AREA

TREE NO.	COMMON NAME	DIAM.	COND.	REMAIN OR REMOVE
1	CHERRY	12"	POOR	REMOVE
2	SPRUCE	14"	FAIR	REMOVE
3	SPRUCE	14"	FAIR	REMOVE
4	SPRUCE	14"	FAIR	REMOVE
5	MAPLE	24"	GOOD	REMOVE
6	SPRUCE	14"	FAIR	REMOVE
7	CHERRY	12"	FAIR	REMOVE
8	MAPLE	16"	GOOD	REMOVE
9	MAPLE	38"	GOOD	REMAIN
10	SPRUCE	14"	FAIR	REMOVE
11	MAPLE	10"	GOOD	REMAIN
12	SPRUCE	14"	FAIR	REMOVE
13	ASH	8"	GOOD	REMAIN
14	MAPLE	8"	GOOD	REMOVE
15	MAPLE	8"	GOOD	REMAIN
16	ASH	14"	GOOD	REMAIN
17	SPRUCE	14"	FAIR	REMOVE
18	ASH	10"	GOOD	REMAIN
19	ASH	14"	GOOD	REMAIN
20	ASH	10"	GOOD	REMAIN
21	ASH	10"	GOOD	REMAIN
22	MAPLE	8"	GOOD	REMAIN
23	MAPLE	8"	GOOD	REMAIN
24	MAPLE	8"	GOOD	REMOVE
25	MAPLE	8"	GOOD	REMAIN
26	MAPLE	26"	GOOD	REMAIN
27	MAPLE	8"	GOOD	REMAIN
28	MAPLE	10"	GOOD	REMAIN
29	MAPLE	10" 6"	GOOD	REMAIN
30	ASH	12"	GOOD	REMAIN
31	MAPLE	12"	GOOD	REMAIN
32	SPRUCE	14"	FAIR	REMOVE
33	ASH	8"	GOOD	REMAIN
34	ASH	8"	GOOD	REMAIN
35	MAPLE	8"	GOOD	REMAIN
36	ASH	8"	FAIR	REMAIN
37	CHERRY	12"	GOOD	REMAIN
38	CHERRY	8"	POOR	REMAIN
39	MAPLE	8"	POOR	REMAIN
40	ASH	12" TW	FAIR	REMAIN
41	MAPLE	10"	GOOD	REMAIN
42	CHERRY	8"	POOR	REMAIN
43	MAPLE	34"	GOOD	REMAIN
44	ASH	8"	GOOD	REMAIN
45	MAPLE	8"	GOOD	REMAIN
46	MAPLE	44"	FAIR	REMOVE
47	MAPLE	36"	GOOD	REMOVE
48	MAPLE	20"	FAIR	REMOVE
49	MAPLE	8"	GOOD	REMAIN
50	MAPLE	34"	GOOD	REMAIN
51	MAPLE	8"	GOOD	REMAIN
52	MAPLE	16"	GOOD	REMAIN
53	MAPLE	8"	GOOD	REMAIN
54	OAK	30"	GOOD	REMAIN
55	MAPLE	4"	GOOD	REMOVE
56	MAPLE	12"	GOOD	REMAIN
57	MAPLE	48"	GOOD	REMOVE
58	MAPLE	26"	FAIR	REMAIN
59	MAPLE	44"	POOR	REMOVE
60	MAPLE	8"	GOOD	REMAIN
61	OAK	28"	GOOD	REMAIN
62	MAPLE	28"	GOOD	REMAIN
63	CHERRY	8"	FAIR	REMAIN
64	MAPLE	12"	GOOD	REMAIN
65	CHERRY	10"	FAIR	REMAIN
66	MAPLE	8"	GOOD	REMAIN
67	MAPLE	22"	FAIR	REMOVE
68	CHERRY	10"	GOOD	REMAIN
69	MAPLE	12"	GOOD	REMOVE
70	MAPLE	8"	GOOD	REMAIN
71	MAPLE	20" 12"	FAIR	REMAIN
72	MAPLE	12"	GOOD	REMAIN
73	MAPLE	10"	GOOD	REMAIN
74	ASH	24"	FAIR	REMAIN
75	MAPLE	8"	GOOD	REMAIN
76	MAPLE	12"	GOOD	REMOVE
77	MAPLE	12"	GOOD	REMAIN
78	MAPLE	10"	GOOD	REMAIN
79	MAPLE	8" 6"	GOOD	REMAIN
80	SPRUCE	12"	FAIR	REMOVE
81	MAPLE	12"	GOOD	REMAIN
82	SPRUCE	12"	FAIR	REMOVE
83	MAPLE	12"	GOOD	REMAIN
84	MAPLE	12"	GOOD	REMOVE
85	SPRUCE	14"	GOOD	REMOVE
86	ASH	22"	POOR	REMAIN
87	MAPLE	12"	GOOD	REMAIN
88	DECIDUOUS	12"	FAIR	REMOVE
89	SPRUCE	10"	FAIR	REMOVE
90	MAPLE	8"	FAIR	REMAIN
91	MAPLE	8"	FAIR	REMAIN
92	BIRCHERRY	14" TR	GOOD	REMOVE
93	SPRUCE	8"	FAIR	REMOVE
94	MAPLE	12"	POOR	REMOVE
95	PINE	10"	GOOD	REMOVE
96	PINE	8"	GOOD	REMOVE
97	MAPLE	16"	GOOD	REMOVE

TREE NO.	COMMON NAME	DIAM.	COND.	REMAIN OR REMOVE
98	SPRUCE	8"	FAIR	REMOVE
99	SPRUCE	8"	POOR	REMOVE
100	MAPLE	10"	GOOD	REMAIN
101	HICKORY	8"	GOOD	REMAIN
102	MAPPLELE	10"	GOOD	REMAIN
103	MAPLE	44"	GOOD	REMOVE
104	MAPLE	10"	GOOD	REMAIN
105	MAPLE	10"	GOOD	REMAIN
106	MAPLE	8"	GOOD	REMAIN
107	BIRCHERRY	16" TR	GOOD	REMOVE
108	ASH	8"	FAIR	REMAIN
110	MAGNOLIA	14"	GOOD	REMOVE
111	MAPLE	10"	GOOD	REMAIN
112	MAPLE	10"	GOOD	REMAIN
113	PINE	12"	GOOD	REMAIN
114	MAPLE	8"	GOOD	REMAIN
115	MAPLE	16"	GOOD	REMAIN
116	MAPLE	8"	GOOD	REMAIN
117	PINE	14" 8"	GOOD	REMOVE
118	SPRUCE	14"	POOR	REMOVE
119	PINE	14"	FAIR	REMOVE
120	MAPLE	10"	GOOD	REMAIN
121	BIRCHERRY	12" MU	GOOD	REMOVE
122	MAPLE	10"	GOOD	REMAIN
123	MAPLE	8"	FAIR	REMAIN
124	MAPLE	12" 8"	FAIR	REMAIN
125	OAK	20"	FAIR	REMOVE
126	SPRUCE	18" TW	POOR	REMOVE
127	MAPLE	8"	GOOD	REMAIN
129	MAPLE	12"	GOOD	REMAIN
130	MAPLE	8"	GOOD	REMAIN
132	MAPLE	8"	GOOD	REMAIN
134	MAPLE	10"	GOOD	REMAIN
135	PINE	14"	GOOD	REMOVE
136	MAPLE	8"	GOOD	REMAIN
137	PINE	10"	POOR	REMOVE
138	MAPLE	10"	GOOD	REMAIN
139	SPRUCE	14"	FAIR	REMOVE
140	SPRUCE	14"	FAIR	REMOVE
141	OAK	10"	GOOD	REMOVE
142	OAK	10"	FAIR	REMOVE
143	MAPLE	12"	GOOD	REMAIN
144	HICKORY	10"	GOOD	REMAIN
145	OAK	18"	GOOD	REMOVE
146	OAK	10"	GOOD	REMOVE
147	ASH	16"	FAIR	REMOVE
148	MAPLE	12"	GOOD	REMAIN
149	BIRCHERRY	8"	GOOD	REMOVE
150	OAK	12"	GOOD	REMOVE
151	PEAR	16"	FAIR	REMOVE
152	OAK	12"	GOOD	REMOVE
154	MAPLE	10"	GOOD	REMAIN
155	OAK	8"	GOOD	REMOVE
156	ASH	10"	GOOD	REMAIN
157	PINE	10"	GOOD	REMAIN
158	OAK	8"	GOOD	REMOVE
159	SPRUCE	14"	GOOD	REMOVE
160	LOCUST	6"	GOOD	REMOVE
161	PINE	8"	POOR	REMOVE
162	PINE	8"	FAIR	REMOVE
163	SPRUCE	10"	GOOD	REMAIN
164	PINE	8"	FAIR	REMOVE
166	SPRUCE	8"	FAIR	REMAIN
167	OAK	14"	GOOD	REMOVE
168	MAPLE	10"	GOOD	REMAIN
169	PEAR	21"	FAIR	REMOVE
170	SPRUCE	8"	GOOD	REMOVE
171	OAK	14"	FAIR	REMOVE
172	OAK	20"	GOOD	REMOVE
173	OAK	14"	GOOD	REMOVE
174	MAPLE	12"	GOOD	REMOVE
175	MAPLE	14"	GOOD	REMOVE
176	SPRUCE	8"	GOOD	REMOVE
177	SPRUCE	8"	FAIR	REMOVE
178	MAPLE	10"	GOOD	REMOVE
179	SPRUCE	8"	FAIR	REMOVE
180	MAPLE	8"	GOOD	REMAIN
181	SPRUCE	14"	GOOD	REMOVE
182	SPRUCE	14"	FAIR	REMOVE
183	SPRUCE	12"	GOOD	REMOVE
184	SPRUCE	14"	FAIR	REMOVE
185	SPRUCE	8"	FAIR	REMOVE
186	SPRUCE	8"	FAIR	REMOVE
187	SPRUCE	8"	FAIR	REMOVE
188	SPRUCE	8"	FAIR	REMOVE
189	MAPLE	10"	GOOD	REMOVE
190	MAPLE	10"	GOOD	REMAIN
191	SPRUCE	8"	GOOD	REMOVE
192	MAPLE	12"	GOOD	REMOVE
193	SPRUCE	8"	GOOD	REMOVE
194	SPRUCE	8"	FAIR	REMOVE
195	SPRUCE	8"	FAIR	REMOVE
196	PEAR	8"	GOOD	REMOVE
197	SPRUCE	8"	FAIR	REMOVE
198	SPRUCE	8"	GOOD	REMOVE
199	SPRUCE	12"	FAIR	REMOVE

TREE NO.	COMMON NAME	DIAM.	COND.	REMAIN OR REMOVE
200	MAPLE	8"	GOOD	REMOVE
201	ASH	10"	GOOD	REMOVE
202	ASH	8"	GOOD	REMOVE
203	OAK	14"	FAIR	REMOVE
204	MAPLE	14"	GOOD	REMOVE
205	SPRUCE	8"	GOOD	REMOVE
206	PINE	14"	GOOD	REMOVE
207	MAPLE	8"	GOOD	REMOVE
208	PINE	12"	FAIR	REMOVE
209	MAPLE	10"	GOOD	REMAIN
210	PINE	14"	FAIR	REMOVE
211	PINE	10"	FAIR	REMOVE
212	SPRUCE	8"	GOOD	REMOVE
213	SPRUCE	8"	FAIR	REMAIN
214	CHERRY	9"	FAIR	REMAIN
215	OAK	14"	FAIR	REMOVE
216	MAPLE	16"	FAIR	REMOVE
217	MAPLE	10"	FAIR	REMOVE
218	SPRUCE	12"	GOOD	REMOVE
219	MAPLE	8"	GOOD	REMAIN
220	PEAR	10"	GOOD	REMOVE
221	SPRUCE	8"	GOOD	REMOVE
222	SPRUCE	8"	FAIR	REMOVE
223	MAPLE	9" TW	GOOD	REMOVE
224	MAPLE	8"	GOOD	REMAIN
225	SPRUCE	8"	FAIR	REMOVE
226	MAPLE	10"	GOOD	REMAIN
227	PINE	8"	FAIR	REMAIN
228	LOCUST	12"	GOOD	REMOVE
229	PINE	10"	GOOD	REMOVE
230	PINE	10"	FAIR	REMOVE
231	PINE	10"	FAIR	REMOVE
232	MAPLE	10"	GOOD	REMAIN
233	MAPLE	10"	GOOD	REMOVE
234	PINE	10"	POOR	REMOVE
235	PINE	10"	FAIR	REMOVE
236	MAPLE	12" TR	FAIR	REMAIN
237	SPRUCE	12"	GOOD	REMAIN
238	SPRUCE	12"	GOOD	REMAIN
239	SPRUCE	8"	FAIR	REMAIN
240	SPRUCE	8"	GOOD	REMOVE
242	LOCUST	14"	GOOD	REMOVE
243	SPRUCE	8"	FAIR	REMAIN
244	MAPLE	8"	FAIR	REMOVE
245	SPRUCE	12"	GOOD	REMAIN
246	MAPLE	8"	FAIR	REMAIN
247	SPRUCE	8"	FAIR	REMAIN
248	SPRUCE	8"	GOOD	REMOVE
249	MAPLE	12"	FAIR	REMAIN
250	MAPLE	12" 8" 6"	FAIR	REMAIN
251	MAPLE	10"	FAIR	REMAIN
252	SPRUCE	8"	GOOD	REMOVE
253	MAPLE	8"	GOOD	REMAIN
254	OAK	36"	GOOD	REMAIN
255	SPRUCE	8"	GOOD	REMOVE
256	MAPLE	14"	FAIR	REMOVE
257	MAPLE	12" 8" 6"	FAIR	REMAIN
258	LOCUST	12"	GOOD	REMOVE
259	ASH	18"	GOOD	REMOVE
260	MAPLE	8"	GOOD	REMOVE
261	SPRUCE	8"	FAIR	REMOVE
263	OAK	12"	GOOD	REMOVE
264	SPRUCE	8"	GOOD	REMOVE
265	PINE	12"	FAIR	REMOVE
266	ASH	10"	GOOD	REMOVE
268	SPRUCE	8"	FAIR	REMOVE
269	SPRUCE	8"	GOOD	REMOVE
270	SPRUCE	8"	FAIR	REMOVE
271	SPRUCE	12"	POOR	REMAIN
272	DOGWOOD	10"	POOR	REMOVE
273	PINE	20"	FAIR	REMOVE
274	OAK	10"	GOOD	REMOVE
275	SPRUCE	14"	POOR	REMAIN
276	SPRUCE	8"	FAIR	REMOVE
277	SM	24"	GOOD	REMAIN
278	SPRUCE	16"	GOOD	REMAIN
279	PINE	16"	FAIR	REMOVE
280	CEDAR	12"	GOOD	REMAIN
281	MAPLE	16"	GOOD	REMOVE
282	PINE	10"	FAIR	REMOVE
283	SPRUCE	14"	POOR	REMAIN
284	OAK	14"	GOOD	REMAIN
285	SPRUCE	8"	GOOD	REMOVE
286	BIRCHERRY	12"	GOOD	REMAIN
287	BIRCHERRY	8"	POOR	REMAIN
288	SPRUCE	10"	POOR	REMAIN
289	MAPLE	12"	GOOD	REMAIN
290	PINE	12"	FAIR	REMOVE
291	PINE	8"	FAIR	REMOVE
293	SPRUCE	12" TW	GOOD	REMAIN
294	PINE	12"	FAIR	REMOVE
295	PINE	10"	FAIR	REMOVE
296	CEDAR	24" TW	FAIR	REMOVE
297	ASH	16"	GOOD	REMOVE
298	MAPLE	10"	GOOD	REMOVE
299	PINE	10"	FAIR	REMOVE

TREE NO.	COMMON NAME	DIAM.	COND.	REMAIN OR REMOVE
300	BIRCHERRY	10"	POOR	REMOVE
301	PINE	28"	FAIR	REMOVE
302	SPRUCE	12"	GOOD	REMOVE
303	MAPLE	8"	GOOD	REMOVE
304	SPRUCE	12"	POOR	REMAIN
305	SPRUCE	8"	GOOD	REMOVE
306	PINE	10"	POOR	REMOVE
307	SPRUCE	14"	POOR	REMOVE
308	SPRUCE	8"	GOOD	REMOVE
309	SPRUCE	12"	GOOD	REMOVE
310	PINE	18"	FAIR	REMOVE
311	ASH	10"	FAIR	REMOVE
312	CEDAR	10"	GOOD	REMOVE
313	MAPLE	22"	GOOD	REMOVE
314	SPRUCE	14"	GOOD	REMOVE
315	PINE	26"	GOOD	REMOVE
316	CEDAR	10"	FAIR	REMOVE
317	MAPLE	30"	POOR	REMOVE
318	PINE	24"	FAIR	REMAIN
319	PINE	14"	FAIR	REMOVE
320	CEDAR	12"	FAIR	REMOVE
321	SPRUCE	12"	GOOD	REMOVE
322	OAK	12"	GOOD	REMOVE
323	DECIDUOUS	10"	POOR	REMOVE
324	CEDAR	10"	FAIR	REMOVE
325	MAPLE	18"	GOOD	REMOVE
326	PINE	14"	FAIR	REMAIN
327	PINE	28"	GOOD	REMOVE
328	CEDAR	10"	FAIR	REMOVE
329	ASH	12"	FAIR	REMOVE
330	CEDAR	10"	FAIR	REMOVE
331	MAPLE	20"	GOOD	REMOVE
332	CEDAR	10"	FAIR	REMOVE
333	PINE	14"	FAIR	REMAIN
334	DECIDUOUS	12"	GOOD	REMOVE
335	CHERRY	10"	GOOD	REMOVE
336	MAPLE	14"	FAIR	REMOVE
337	MAPLE	10"	GOOD	REMOVE
338	SPRUCE	10"	GOOD	REMOVE
339	MAPLE	14"	GOOD	REMOVE
340	CEDAR	8" TW	FAIR	REMOVE
341	PEAR	22"	GOOD	REMOVE
342	CEDAR	10" TW	FAIR	REMOVE
343	PINE	36"	GOOD	REMOVE
344	APPLE	8"	GOOD	REMOVE
345	OAK	8"	FAIR	REMOVE
346	CEDAR	10"	GOOD	REMOVE
347	OAK	34"	GOOD	REMAIN
348	MAGNOLIA	8"	FAIR	REMOVE
349	MAGNOLIA	12"	FAIR	REMOVE
350	SPRUCE	10"	FAIR	REMOVE
351	CEDAR	12" TW	GOOD	REMOVE
352	CEDAR	8"	FAIR	REMOVE
353	MAPLE	24"	POOR	REMOVE
354	SPRUCE	16"	GOOD	REMOVE
355	CEDAR	8"	FAIR	REMOVE
356	APPLE	8"	FAIR	REMOVE
357	CEDAR	10"	GOOD	REMOVE
358	SPRUCE	10"	GOOD	REMOVE
359	DECIDUOUS	16"	GOOD	REMOVE
360	CEDAR	14"	FAIR	REMOVE
361	MAPLE	16"	GOOD	REMAIN
362	OAK	40"	GOOD	REMAIN
363	CEDAR	12"	FAIR	REMOVE
364	MAPLE	18"	GOOD	REMAIN
366	CEDAR	10"	FAIR	REMOVE
367	HM	18"	POOR	REMOVE
368	CEDAR	14"	FAIR	REMOVE
369	APPLE	8"	FAIR	REMOVE
370	APPLE	8"	GOOD	REMOVE
371	SPRUCE	14"	GOOD	REMOVE
372	SYCAMORE	16"	FAIR	REMOVE
373	CEDAR	12"	FAIR	REMOVE
374	HEMLOCK	8"	POOR	REMOVE
375	MAPLE	12"	GOOD	REMAIN
376	HEMLOCK	8"	POOR	REMOVE
377	MAPLE	12"	POOR	REMOVE
378	SPRUCE	14"	FAIR	REMOVE
380	MAPLE	12"	GOOD	REMAIN
381	BIRCHERRY	14"	GOOD	REMAIN
382	BIRCHERRY	14"	GOOD	REMAIN
383	PINE	28"	FAIR	REMOVE
384	SPRUCE	20"	GOOD	REMOVE
385	APPLE	10"	GOOD	REMOVE
386	OAK	30"	GOOD	REMOVE
387	HEMLOCK	8" TW	FAIR	REMOVE
388	OAK	12"	FAIR	REMOVE
389	APPLE	12" TR	POOR	REMOVE
390	SPRUCE	14"	FAIR	REMAIN
391	MAPLE	34"	GOOD	REMAIN
392	APPLE	10"	GOOD	REMOVE
393	APPLE	12"	GOOD	REMOVE
394	CHERRY	10"	POOR	REMOVE
395	ASH	16"	FAIR	REMOVE
396	CHERRY	10"	POOR	REMOVE
397	OAK	22"	FAIR	REMOVE
398	MAPLE	14"	FAIR	REMOVE
399	OAK	28"	GOOD	REMOVE

TREE SUMMARY

EXISTING TREES	1,091
EXISTING TREES TO BE REMOVED	678
EXISTING TREES TO REMAIN	413
PROPOSED TREES TO BE PLANTED	898

NOTES:

1. EXISTING CONDITIONS DEPICTED ON THIS PLAN HAVE BEEN TAKEN FROM SURVEY TITLED, "PARCEL COMPILATION SURVEY DEPICTING LAND OF MBIA INSURANCE CORP.," PREPARED BY JOHN MEYER CONSULTING, DATED 09/30/2005 AND SUPPLEMENTED WITH SURVEY TITLED, "TOPOGRAPHIC SURVEY," PREPARED BY JMC PLANNING, ENGINEERING, LANDSCAPE ARCHITECTURE & LAND SURVEYING, PLLC, DATED 02/10/2022.
2. EXISTING TREES DEPICTED HEREON ARE BASED ON A FIELD SURVEY PERFORMED BY JMC PLANNING, ENGINEERING, LANDSCAPE ARCHITECTURE & LAND SURVEYING, PLLC, IN MARCH, 2019, SUPPLEMENTED WITH ADDITIONAL TREE SURVEY, DATED 10/31/2022.

No.	Revision	Date	By
1.	REVISED FEIS	01/20/2023	BMS
2.	PLANNING BOARD SUBMISSION	10/06/2023	BMS
3.	TOWN CONSERVATION BOARD SUBMISSION	10/31/2023	BMS
4.	PLANNING BOARD RESUBMISSION	11/10/2023	BMS
5.	PLANNING BOARD RESUBMISSION	12/21/2023	BMS

Previous Editions Obsolete

APPLICANT/OWNER:
AIRPORT CAMPUS I-V LLC
46 WESTCHESTER AVENUE
POUND RIDGE, NY 10576

JMC Planning, Engineering, Landscape Architecture & Land Surveying, PLLC
JMC Site Development Consultants, LLC
John Meyer Consulting, Inc.
120 BEDFORD ROAD • ARMONK, NY 10504
voice 914.273.5225 • fax 914.273.2102
www.jmcpllc.com

TREE PROTECTION TABLE (PART A)
AIRPORT CAMPUS
113 KING STREET (NY ROUTE 120)
NORTH CASTLE, NY 10504

ANY ALTERATION OF PLANS, SPECIFICATIONS, PLATS AND REPORTS BEARING THE SEAL OF A LICENSED PROFESSIONAL ENGINEER OR LICENSED LAND SURVEYOR IS A VIOLATION OF ARTICLE 145 OF THE NEW YORK STATE EDUCATION LAW, EXCEPT AS PROVIDED FOR BY SECTION 7209, SUBSECTION 2.

STATE OF NEW YORK · DAVID P. LOMBARDI · 071001 · LICENSED PROFESSIONAL ENGINEER

APPROVED BY TOWN OF NORTH CASTLE PLANNING BOARD RESOLUTION, DATED ________
________ DATE: ________
CHRISTOPHER CARTHY, CHAIRMAN,
TOWN OF NORTH CASTLE PLANNING BOARD
ENGINEERING PLANS REVIEWED FOR CONFORMANCE TO RESOLUTION
________ DATE: ________
JOSEPH M. CERMELE, PE
KSCJ CONSULTING
CONSULTING TOWN ENGINEERS

Drawn: BMS Approved: AG
Scale: –
Date: 09/21/2022
Project No: 15072
15072-TREE | C-153 | TREE.scr
Drawing No: C–153

NOT FOR CONSTRUCTION

COPYRIGHT © 2023 by JMC All Rights Reserved. No part of this document may be reproduced, stored in a retrieval system, or transmitted in any form or by any means, electronic, mechanical, photocopying, recording or otherwise, without the prior written permission of JMC PLANNING, ENGINEERING, LANDSCAPE ARCHITECTURE & LAND SURVEYING, PLLC | JMC SITE DEVELOPMENT CONSULTANTS, LLC | JOHN MEYER CONSULTING, INC. (JMC). Any modifications or alterations to this document without the written permission of JMC shall render them invalid and unusable.

TREE TABLE - PART B

1,091 EXISTING TREES DESIGNATED HAVING A DIAMETER AT DBH OF 8" OR GREATER WITHIN THE SURVEYED AREA

TREE NO.	COMMON NAME	DIAM.	COND.	REMAIN OR REMOVE	TREE NO.	COMMON NAME	DIAM.	COND.	REMAIN OR REMOVE	TREE NO.	COMMON NAME	DIAM.	COND.	REMAIN OR REMOVE	TREE NO.	COMMON NAME	DIAM.	COND.	REMAIN OR REMOVE
400	SPRUCE	12"	POOR	REMOVE	500	CHERRY	20"	POOR	REMOVE	600	CHERRY	14"	POOR	REMOVE	700	APPLE	12"	DEAD	REMOVE
401	CHERRY	22"	POOR	REMOVE	501	DECIDUOUS	16"	FAIR	REMAIN	602	ASH	18"	POOR	REMOVE	702	ASH	14"	POOR	REMOVE
402	MAPLE	14"	GOOD	REMAIN	502	TREE OF HEAVEN	18"	FAIR	REMOVE	603	CHERRY	12"	POOR	REMOVE	703	SASSAFRAS	18"	FAIR	REMOVE
403	MAPLE	24"	FAIR	REMOVE	503	MAPLE	18"	GOOD	REMOVE	604	CHERRY	12"	DEAD	REMOVE	704	ASH	10"	FAIR	REMOVE
404	OAK	16"	FAIR	REMOVE	504	ASH	16"	FAIR	REMOVE	605	TREE OF HEAVEN	24" TW	FAIR	REMOVE	705	APPLE	28"	POOR	REMOVE
405	MAPLE	12"	GOOD	REMOVE	505	SYCAMORE	16"	GOOD	REMOVE	606	CHERRY	14"	POOR	REMOVE	707	PINE	48"	GOOD	REMOVE
406	MAPLE	22"	FAIR	REMOVE	506	MAPLE	16"	FAIR	REMAIN	607	MAPLE	16"	DEAD	REMOVE	709	MAPLE	50"	GOOD	REMOVE
407	CHERRY	10"	POOR	REMOVE	507	BIRCHERRY	8"	POOR	REMOVE	608	CHERRY	14"	POOR	REMOVE	710	MAPLE	18"	FAIR	REMOVE
408	SPRUCE	14"	FAIR	REMAIN	508	CHERRY	8"	GOOD	REMOVE	609	TREE OF HEAVEN	8" MU	FAIR	REMOVE	712	CHERRY	18"	FAIR	REMOVE
409	SPRUCE	10"	POOR	REMOVE	509	MAPLE	16"	GOOD	REMAIN	610	OAK	38"	GOOD	REMOVE	713	CHERRY	18"	FAIR	REMOVE
410	OAK	22"	GOOD	REMOVE	510	ASH	40"	POOR	REMAIN	611	ASH	12" TW	DEAD	REMOVE	715	MAPLE	48"	GOOD	REMOVE
411	OAK	24"	FAIR	REMOVE	511	CHERRY	10"	DEAD	REMOVE	612	ASH	20"	POOR	REMOVE	716	SASSAFRAS	18"	FAIR	REMOVE
412	CHERRY	18"	FAIR	REMOVE	512	APPLE	12"	DEAD	REMOVE	614	LOCUST	20"	POOR	REMOVE	717	ASH	18"	POOR	REMOVE
413	OAK	20"	GOOD	REMAIN	513	CHERRY	10"	FAIR	REMOVE	616	PINE	10"	DEAD	REMOVE	718	MAPLE	10"	FAIR	REMOVE
414	SPRUCE	10"	POOR	REMOVE	514	APPLE	16"	DEAD	REMOVE	617	WILLOW	60"	POOR	REMAIN	719	MAPLE	10" TW	FAIR	REMOVE
415	SPRUCE	12"	FAIR	REMOVE	515	LOCUST	14"	POOR	REMOVE	618	OAK	12"	FAIR	REMOVE	720	MAPLE	12" TW	FAIR	REMOVE
416	DECIDUOUS	16"	GOOD	REMAIN	516	CHERRY	16"	FAIR	REMOVE	619	CHERRY	8"	POOR	REMOVE	721	BIRCHERRY	14" TR	FAIR	REMOVE
417	DECIDUOUS	16"	GOOD	REMAIN	517	ASH	14"	POOR	REMOVE	620	CHESNUT	18" 6"	GOOD	REMOVE	722	TREE OF HEAVEN	16"	GOOD	REMAIN
419	SPRUCE	20"	FAIR	REMAIN	518	LOCUST	12"	DEAD	REMOVE	621	PINE	20"	GOOD	REMOVE	723	OAK	18"	FAIR	REMOVE
420	LINDEN	16"	GOOD	REMAIN	519	SPRUCE	24"	FAIR	REMAIN	622	PINE	10"	POOR	REMOVE	724	SASSAFRAS	18"	FAIR	REMOVE
421	SPRUCE	8"	FAIR	REMAIN	520	CHERRY	14"	DEAD	REMOVE	623	PINE	24"	FAIR	REMOVE	725	APPLE	16"	POOR	REMOVE
422	HEMLOCK	8"	FAIR	REMOVE	521	CHERRY	12"	FAIR	REMOVE	624	CHESNUT	32"	GOOD	REMOVE	726	OAK	20"	FAIR	REMOVE
423	APPLE	12"	GOOD	REMOVE	523	MAPLE	22" TW	FAIR	REMOVE	625	PINE	18"	FAIR	REMOVE	728	MAPLE	20"	FAIR	REMOVE
424	SPRUCE	10"	POOR	REMOVE	524	ASH	16"	POOR	REMOVE	626	SPRUCE	14"	POOR	REMOVE	729	CHERRY	8"	DEAD	REMOVE
425	OAK	8"	GOOD	REMOVE	525	CHERRY	10"	FAIR	REMOVE	627	CHESNUT	20"	FAIR	REMAIN	730	FIR	16"	POOR	REMOVE
426	SPRUCE	12"	FAIR	REMOVE	527	CHERRY	10"	FAIR	REMOVE	628	PINE	16"	FAIR	REMOVE	731	OAK	28"	FAIR	REMOVE
427	SPRUCE	8"	FAIR	REMAIN	528	CEDAR	10"	GOOD	REMOVE	629	OAK	26"	GOOD	REMOVE	732	MAPLE	32"	GOOD	REMOVE
428	APPLE	8"	FAIR	REMAIN	529	CEDAR	10" 8"	GOOD	REMOVE	630	APPLE	18" TR	POOR	REMOVE	733	CHERRY	16" TW	FAIR	REMOVE
429	OAK	12"	GOOD	REMOVE	530	MAPLE	28"	GOOD	REMOVE	631	OAK	22"	FAIR	REMOVE	735	SPRUCE	16"	GOOD	REMOVE
430	APPLE	8"	POOR	REMOVE	531	PINE	18"	POOR	REMOVE	632	OAK	20"	FAIR	REMOVE	736	MAGNOLIAB	16"	GOOD	REMOVE
431	SPRUCE	10"	GOOD	REMAIN	532	MAPLE	20"	FAIR	REMAIN	633	PINE	22"	POOR	REMOVE	737	SPRUCE	16"	GOOD	REMOVE
432	SPRUCE	12"	POOR	REMAIN	533	ASH	12"	FAIR	REMOVE	634	CHERRY	18"	FAIR	REMOVE	739	WALNUT	12"	GOOD	REMOVE
433	SPRUCE	12"	FAIR	REMAIN	535	PINE	16"	FAIR	REMOVE	635	MAPLE	16"	FAIR	REMOVE	740	HEMLOCK	12" 10"	GOOD	REMOVE
434	SPRUCE	14"	FAIR	REMAIN	536	CHERRY	12"	POOR	REMOVE	636	OAK	16"	GOOD	REMOVE	741	MAPLE	8" TR	POOR	REMOVE
435	OAK	22"	FAIR	REMOVE	537	CHERRY	10"	POOR	REMOVE	637	CHERRY	12"	FAIR	REMOVE	742	HEMLOCK	14"	GOOD	REMOVE
436	MAPLE	26"	GOOD	REMAIN	538	MAPLE	48"	POOR	REMOVE	638	PINE	18"	POOR	REMOVE	743	APPLE	24"	POOR	REMOVE
437	SPRUCE	12"	POOR	REMOVE	539	MAPLE	26"	FAIR	REMOVE	639	ASH	12"	POOR	REMOVE	744	PINE	22"	GOOD	REMOVE
438	BIRCHERRY	12" MU	FAIR	REMOVE	540	CHERRY	12"	POOR	REMOVE	641	ASH	24"	POOR	REMOVE	745	PINE	22"	GOOD	REMOVE
439	SPRUCE	12"	POOR	REMOVE	541	CHERRY	12"	FAIR	REMOVE	642	OAK	28"	FAIR	REMOVE	746	BIRCHERRY	22"	GOOD	REMOVE
440	BIRCHERRY	12" MU	FAIR	REMOVE	544	CHERRY	8"	FAIR	REMOVE	643	OAK	30"	FAIR	REMOVE	748	MAPLE	24" 8"	FAIR	REMOVE
441	BIRCHERRY	18" TR	FAIR	REMOVE	545	LOCUST	22"	POOR	REMOVE	644	ASH	12"	POOR	REMOVE	752	BIRCHERRY	10" 4"	GOOD	REMAIN
442	SPRUCE	10"	POOR	REMOVE	546	MAPLE	18"	FAIR	REMOVE	645	ASH	12"	POOR	REMOVE	753	SASSAFRAS	10"	GOOD	REMOVE
443	SPRUCE	10"	POOR	REMOVE	547	ASH	10" TW	POOR	REMOVE	646	PINE	16" MU	POOR	REMOVE	754	MAPLE	22" 14"	GOOD	REMAIN
444	MAPLE	14"	GOOD	REMOVE	548	PINE	12"	POOR	REMOVE	647	APPLE	20"	DEAD	REMOVE	755	SASSAFRAS	8"	GOOD	REMOVE
445	SPRUCE	8"	POOR	REMOVE	549	ASH	14"	POOR	REMOVE	648	PINE	16"	GOOD	REMOVE	756	OAK	28"	GOOD	REMAIN
446	HEMLOCK	8"	FAIR	REMOVE	550	BIRCHERRY	8"	GOOD	REMOVE	649	OAK	24"	FAIR	REMOVE	757	MAPLE	10"	GOOD	REMOVE
447	LOCUST	10"	FAIR	REMOVE	551	CHERRY	8"	DEAD	REMOVE	650	ASH	10"	POOR	REMOVE	758	DECIDUOUS	8"	POOR	REMOVE
448	CEDAR	10"	FAIR	REMOVE	552	SYCAMORE	8"	GOOD	REMAIN	651	ASH	8"	POOR	REMOVE	759	HICKORY	16"	GOOD	REMOVE
449	HEMLOCK	10"	POOR	REMOVE	553	PINE	16"	FAIR	REMOVE	652	OAK	16" TW	POOR	REMOVE	760	CHERRY	8"	POOR	REMOVE
451	HEMLOCK	12"	FAIR	REMOVE	554	CHERRY	18"	POOR	REMOVE	653	OAK	26"	GOOD	REMOVE	761	CHERRY	8"	POOR	REMAIN
452	SPRUCE	20"	POOR	REMOVE	555	APPLE	18"	DEAD	REMOVE	654	SPRUCE	24"	FAIR	REMOVE	762	MAPLE	8"	GOOD	REMAIN
454	CEDAR	10"	FAIR	REMOVE	556	WALNUT	16"	POOR	REMAIN	655	MAPLE	24"	FAIR	REMOVE	763	MAPLE	10" 6"	POOR	REMAIN
455	MAPLE	18"	FAIR	REMOVE	557	MAPLE	20"	FAIR	REMOVE	656	PINE	30" MU	FAIR	REMOVE	764	MAPLE	12"	GOOD	REMAIN
456	LOCUST	12"	DEAD	REMOVE	558	ASH	12"	DEAD	REMOVE	657	SPRUCE	10" MU	FAIR	REMOVE	765	MAPLE	8"	GOOD	REMAIN
457	CHERRY	20"	GOOD	REMOVE	560	LOCUST	20"	FAIR	REMOVE	658	PINE	22"	FAIR	REMOVE	766	ASH	22"	GOOD	REMOVE
458	MAPLE	10" MU	POOR	REMOVE	561	DOGWOOD	8"	FAIR	REMAIN	659	MAPLE	8"	FAIR	REMAIN	767	MAPLE	12"	GOOD	REMOVE
460	CEDAR	20"	POOR	REMOVE	562	CHERRY	10"	FAIR	REMOVE	660	SPRUCE	28"	FAIR	REMOVE	768	MAPLE	10"	GOOD	REMOVE
461	CHERRY	16"	FAIR	REMOVE	563	PINE	16"	DEAD	REMOVE	661	CHERRY	22"	POOR	REMOVE	770	HICKORY	26"	GOOD	REMOVE
465	MAPLE	8"	FAIR	REMOVE	564	ASH	10"	FAIR	REMAIN	662	CHERRY	14"	POOR	REMOVE	771	CHERRY	8"	POOR	REMOVE
466	MAPLE	18"	GOOD	REMOVE	565	LOCUST	18"	FAIR	REMOVE	663	PINE	20"	FAIR	REMOVE	772	LOCUST	10"	POOR	REMOVE
467	MAPLE	12"	FAIR	REMOVE	566	CHERRY	10"	FAIR	REMOVE	664	ASH	12"	POOR	REMAIN	773	BIRCHERRY	10"	POOR	REMOVE
470	OAK	24"	FAIR	REMOVE	567	LOCUST	18"	FAIR	REMOVE	665	MAPLE	14"	GOOD	REMAIN	774	SPRUCE	10"	FAIR	REMOVE
471	MAPLE	12"	GOOD	REMAIN	568	MAPLE	22" TW	FAIR	REMAIN	667	PINE	18"	FAIR	REMOVE	775	MAPLE	10"	FAIR	REMOVE
472	PINE	16"	FAIR	REMOVE	569	PINE	16"	POOR	REMOVE	668	SPRUCE	18"	GOOD	REMOVE	776	MAPLE	8"	FAIR	REMOVE
473	PINE	24"	FAIR	REMOVE	570	PINE	14"	POOR	REMOVE	669	BIRCHERRY	12"	FAIR	REMAIN	777	SPRUCE	10"	POOR	REMOVE
474	MAPLE	16"	FAIR	REMOVE	571	SPRUCE	18"	GOOD	REMAIN	671	MAPLE	10"	FAIR	REMAIN	778	SPRUCE	10"	POOR	REMOVE
475	OAK	14"	FAIR	REMOVE	572	LOCUST	14"	FAIR	REMOVE	672	PINE	20"	FAIR	REMOVE	779	DECIDUOUS	10"	DEAD	REMAIN
476	PINE	24"	FAIR	REMOVE	573	MAPLE	12"	FAIR	REMOVE	673	ASH	8"	FAIR	REMAIN	780	PINE	14"	DEAD	REMOVE
477	PINE	16"	FAIR	REMOVE	574	TREE OF HEAVEN	14"	FAIR	REMOVE	674	ASH	10"	POOR	REMAIN	781	HICKORY	14"	POOR	REMOVE
478	MAPLE	30"	POOR	REMOVE	575	CHERRY	10"	FAIR	REMOVE	675	MAPLE	50"	FAIR	REMOVE	782	OAK	38"	GOOD	REMOVE
479	PINE	16"	FAIR	REMOVE	576	CHERRY	14"	FAIR	REMOVE	676	HICKORY	10"	GOOD	REMAIN	783	DECIDUOUS	18"	DEAD	REMOVE
480	PINE	8"	DEAD	REMAIN	577	MAPLE	18"	FAIR	REMOVE	677	APPLE	12"	GOOD	REMOVE	784	DECIDUOUS	12"	POOR	REMOVE
481	MAPLE	10"	POOR	REMAIN	578	CHERRY	14"	POOR	REMOVE	678	MAPLE	24"	GOOD	REMOVE	785	MAPLE	10"	FAIR	REMAIN
482	MAPLE	10"	GOOD	REMAIN	579	CHERRY	16"	FAIR	REMOVE	679	MAPLE	12"	GOOD	REMAIN	786	MAPLE	10"	FAIR	REMOVE
483	PINE	28"	FAIR	REMOVE	580	HEMLOCK	8"	FAIR	REMOVE	680	ASH	10"	FAIR	REMAIN	787	DECIDUOUS	14"	POOR	REMOVE
484	MAPLE	12"	POOR	REMAIN	581	PINE	16"	DEAD	REMOVE	681	ASH	10"	FAIR	REMOVE	788	DECIDUOUS	14"	FAIR	REMAIN
485	MAPLE	18"	GOOD	REMAIN	582	ASH	20"	POOR	REMOVE	682	PINE	18"	GOOD	REMOVE	789	DECIDUOUS	22"	POOR	REMAIN
486	PINE	28"	FAIR	REMOVE	583	LOCUST	30"	FAIR	REMOVE	683	DECIDUOUS	8"	FAIR	REMOVE	790	OAK	24"	GOOD	REMAIN
487	PINE	8"	DEAD	REMOVE	584	ASH	16"	FAIR	REMOVE	684	ASH	8"	POOR	REMAIN	791	OAK	20"	GOOD	REMAIN
488	PINE	16"	FAIR	REMOVE	585	LOCUST	14"	FAIR	REMOVE	685	TREE OF HEAVEN	16"	GOOD	REMAIN	792	OAK	20"	FAIR	REMAIN
489	LOCUST	26"	POOR	REMAIN	586	BIRCHERRY	12"	POOR	REMOVE	690	MAPLE	10"	FAIR	REMOVE	793	DECIDUOUS	12"	DEAD	REMOVE
490	PINE	16"	FAIR	REMOVE	587	LOCUST	10"	FAIR	REMOVE	691	CEDAR	16"	FAIR	REMOVE	794	DECIDUOUS	8"	POOR	REMOVE
491	ASH	14"	POOR	REMOVE	588	BIRCHERRY	26"	POOR	REMOVE	692	PINE	16"	FAIR	REMOVE	795	DECIDUOUS	10"	POOR	REMOVE
492	CHERRY	12"	POOR	REMOVE	589	TREE OF HEAVEN	20"	GOOD	REMOVE	693	CEDAR	14" MU	FAIR	REMOVE	796	DECIDUOUS	10"	DEAD	REMOVE
493	ASH	12"	POOR	REMOVE	591	PINE	16"	POOR	REMOVE	697	ASH	16"	DEAD	REMOVE	797	DECIDUOUS	12" 10"	POOR	REMOVE
494	CHERRY	10"	POOR	REMOVE	592	MAPLE	30"	GOOD	REMOVE	698	WILLOW	50"	POOR	REMOVE	798	DECIDUOUS	10"	POOR	REMOVE
495	CHERRY	10"	POOR	REMOVE	593	CHERRY	14"	POOR	REMOVE	699	BIRCHERRY	16"	POOR	REMOVE	799	OAK	12"	GOOD	REMOVE
496	CHERRY	8"	FAIR	REMOVE	594	OAK	28"	FAIR	REMOVE										
497	LOCUST	14"	POOR	REMOVE	595	CHERRY	12"	POOR	REMOVE										
498	ELM	16"	GOOD	REMAIN	596	CHERRY	8"	GOOD	REMOVE										
499	MAPLE	10" TW	GOOD	REMAIN	598	ASH	18"	POOR	REMOVE										
					599	WALNUT	16"	FAIR	REMAIN										

TREE SUMMARY	
EXISTING TREES	1,091
EXISTING TREES TO BE REMOVED	678
EXISTING TREES TO REMAIN	413
PROPOSED TREES TO BE PLANTED	898

NOTES:

1. EXISTING CONDITIONS DEPICTED ON THIS PLAN HAVE BEEN TAKEN FROM SURVEY TITLED, "PARCEL COMPILATION SURVEY DEPICTING LAND OF MBIA INSURANCE CORP.," PREPARED BY JOHN MEYER CONSULTING, DATED 09/30/2005 AND SUPPLEMENTED WITH SURVEY TITLED, "TOPOGRAPHIC SURVEY," PREPARED BY JMC PLANNING, ENGINEERING, LANDSCAPE ARCHITECTURE & LAND SURVEYING, PLLC, DATED 02/10/2022.
2. EXISTING TREES DEPICTED HEREON ARE BASED ON A FIELD SURVEY PERFORMED BY JMC PLANNING, ENGINEERING, LANDSCAPE ARCHITECTURE & LAND SURVEYING, PLLC, IN MARCH, 2019, SUPPLEMENTED WITH ADDITIONAL TREE SURVEY, DATED 10/31/2022.

APPROVED BY TOWN OF NORTH CASTLE PLANNING BOARD RESOLUTION, DATED _____

_____ DATE: _____
CHRISTOPHER CARTHY, CHAIRMAN,
TOWN OF NORTH CASTLE PLANNING BOARD

ENGINEERING PLANS REVIEWED FOR CONFORMANCE TO RESOLUTION

_____ DATE: _____
JOSEPH M. CERMELE, PE
KSCJ CONSULTING
CONSULTING TOWN ENGINEERS

No.	Revision	Date	By
1.	REVISED FEIS	01/20/2023	BMS
2.	PLANNING BOARD SUBMISSION	10/06/2023	BMS
3.	TOWN CONSERVATION BOARD SUBMISSION	10/31/2023	BMS
4.	PLANNING BOARD RESUBMISSION	11/10/2023	BMS
	PLANNING BOARD RESUBMISSION	12/21/2023	BMS

Previous Editions Obsolete

APPLICANT/OWNER:

AIRPORT CAMPUS I-V LLC
46 WESTCHESTER AVENUE
POUND RIDGE, NY 10576

JMC Planning, Engineering, Landscape Architecture & Land Surveying, PLLC
JMC Site Development Consultants, LLC
John Meyer Consulting, Inc.
120 BEDFORD ROAD • ARMONK, NY 10504
voice 914.273.5225 • fax 914.273.2102
www.jmcpllc.com

TREE PROTECTION TABLE (PART B)

AIRPORT CAMPUS
113 KING STREET (NY ROUTE 120)
NORTH CASTLE, NY 10504

ANY ALTERATION OF PLANS, SPECIFICATIONS, PLATS AND REPORTS BEARING THE SEAL OF A LICENSED PROFESSIONAL ENGINEER OR LICENSED LAND SURVEYOR IS A VIOLATION OF ARTICLE 145 OF THE NEW YORK STATE EDUCATION LAW, EXCEPT AS PROVIDED FOR BY SECTION 7209, SUBSECTION 2.

STATE OF NEW YORK · JOSEPH M. CERMELE · 071001 · LICENSED PROFESSIONAL ENGINEER

Drawn:	BMS	Approved:	AG
Scale:	–		
Date:	09/21/2022		
Project No:	15072		
15072-TREE	C-154	TREE.scr	

Drawing No:
C–154

NOT FOR CONSTRUCTION

COPYRIGHT © 2023 by JMC - all rights reserved. No part of this document may be reproduced, stored in a retrieval system, or transmitted, in any form or by means, electronic, mechanical, photocopying, recording or otherwise, without the prior written permission of JMC PLANNING, ENGINEERING, LANDSCAPE ARCHITECTURE & LAND SURVEYING, PLLC | JOHN MEYER CONSULTING, INC. | JMC SITE DEVELOPMENT CONSULTANTS, LLC. Any modifications or alterations to this document without the written permission of JMC shall render them invalid and unusable.

TREE TABLE - PART C

1,091 EXISTING TREES DESIGNATED HAVING A DIAMETER AT DBH OF 8" OR GREATER WITHIN THE SURVEYED AREA

TREE NO.	COMMON NAME	DIAM.	COND.	REMAIN OR REMOVE	TREE NO.	COMMON NAME	DIAM.	COND.	REMAIN OR REMOVE	TREE NO.	COMMON NAME	DIAM.	COND.	REMAIN OR REMOVE	TREE NO.	COMMON NAME	DIAM.	COND.	REMAIN OR REMOVE
802	SPRUCE	18"	GOOD	REMOVE	900	MAPLE	12''	GOOD	REMOVE	997	OAK	28''	GOOD	REMAIN	1093	PINE	14''	GOOD	REMOVE
803	MAPLE	8″	GOOD	REMOVE	901	PINE	8''	GOOD	REMOVE	998	HICKORY	12''	GOOD	REMAIN	1094	PINE	14''	GOOD	REMOVE
804	MAPLE	10″	GOOD	REMOVE	902	MAPLE	12''	GOOD	REMOVE	999	OAK	16''	GOOD	REMAIN	1095	PINE	12''	GOOD	REMOVE
805	CEDAR	14"	GOOD	REMOVE	903	SPRUCE	8''	GOOD	REMOVE	1000	HEMLOCK	8″	GOOD	REMAIN	1096	PINE	18''	GOOD	REMOVE
806	PINE	10"	GOOD	REMOVE	904	MAPLE	8''	GOOD	REMOVE	1001	HEMLOCK	10″	GOOD	REMAIN	1097	SPRUCE	8''	GOOD	REMOVE
807	MAPLE	8"	GOOD	REMOVE	905	SPRUCE	8''	GOOD	REMOVE	1002	OAK	28''	GOOD	REMAIN	1098	SPRUCE	8''	GOOD	REMOVE
808	OAK	36"	GOOD	REMOVE	906	SPRUCE	14''	GOOD	REMOVE	1003	OAK	26" 24"	GOOD	REMAIN	1099	SPRUCE	16''	GOOD	REMOVE
809	OAK	28"	GOOD	REMOVE	907	SPRUCE	10''	GOOD	REMOVE	1004	BIRCHERRY	14''	GOOD	REMAIN	1100	SPRUCE	12''	GOOD	REMAIN
810	PINE	28"	GOOD	REMOVE	908	SPRUCE	8''	GOOD	REMOVE	1005	OAK	26''	GOOD	REMAIN	1101	SPRUCE	12''	GOOD	REMOVE
811	MAPLE	26"	GOOD	REMOVE	909	MAPLE	16" 24"	GOOD	REMOVE	1006	OAK	12''	GOOD	REMAIN	1102	SPRUCE	12''	GOOD	REMAIN
812	TU	30"	GOOD	REMOVE	910	MAPLE	8" 12"	GOOD	REMOVE	1007	OAK	26''	GOOD	REMAIN	1103	OAK	12''	GOOD	REMAIN
813	SASSAFRAS	8"	GOOD	REMOVE	911	MAPLE	8''	GOOD	REMOVE	1008	BIRCHERRY	8''	GOOD	REMAIN	1104	SPRUCE	12''	GOOD	REMOVE
814	MAPLE	28"	GOOD	REMOVE	912	PINE	12''	GOOD	REMOVE	1009	MAPLE	16''	GOOD	REMAIN	1105	SPRUCE	8''	GOOD	REMOVE
815	DOGWOOD	8"	GOOD	REMOVE	913	PINE	8''	GOOD	REMOVE	1010	BIRCHERRY	8''	GOOD	REMAIN	1106	SPRUCE	12''	GOOD	REMAIN
816	HEMLOCK	28"	GOOD	REMOVE	914	PINE	12''	GOOD	REMOVE	1011	BIRCHERRY	16''	GOOD	REMAIN	1107	SPRUCE	10''	GOOD	REMAIN
817	HEMLOCK	16"	GOOD	REMOVE	915	TREE OF HEAVEN	16''	GOOD	REMOVE	1012	HICKORY	8''	GOOD	REMAIN	1108	SPRUCE	8''	GOOD	REMOVE
818	HEMLOCK	16"	GOOD	REMOVE	916	PINE	10''	GOOD	REMOVE	1013	OAK	30''	GOOD	REMAIN	1109	SPRUCE	12''	GOOD	REMAIN
819	HO	10"	GOOD	REMOVE	917	PINE	8''	GOOD	REMOVE	1014	OAK	24''	GOOD	REMAIN	1110	MAPLE	10''	GOOD	REMAIN
820	HEMLOCK	18"	GOOD	REMAIN	918	PINE	8''	GOOD	REMOVE	1015	OAK	22''	GOOD	REMAIN	1111	SPRUCE	12''	GOOD	REMAIN
821	HEMLOCK	14"	GOOD	REMAIN	919	PINE	8''	GOOD	REMOVE	1016	CHERRY	8''	FAIR	REMAIN	1112	FIR	10''	GOOD	REMAIN
822	HEMLOCK	18"	GOOD	REMAIN	920	SPRUCE	8''	GOOD	REMOVE	1017	OAK	16''	GOOD	REMAIN	1113	FIR	10''	GOOD	REMOVE
823	OAK	26"	GOOD	REMAIN	921	SPRUCE	10''	GOOD	REMOVE	1018	MAPLE	8''	GOOD	REMAIN	1114	SPRUCE	8''	GOOD	REMAIN
824	HEMLOCK	10"	GOOD	REMAIN	922	SPRUCE	8''	GOOD	REMOVE	1019	MAPLE	8''	GOOD	REMAIN	1115	PINE	8''	GOOD	REMAIN
825	OAK	30"	GOOD	REMAIN	923	SPRUCE	12''	GOOD	REMOVE	1020	MAPLE	8" MU	GOOD	REMAIN	1116	SPRUCE	12''	GOOD	REMAIN
826	OAK	30"	GOOD	REMAIN	924	SPRUCE	8''	GOOD	REMOVE	1021	MAPLE	14''	GOOD	REMAIN	1117	FIR	12''	GOOD	REMAIN
827	OAK	36"	GOOD	REMAIN	925	SPRUCE	12''	GOOD	REMOVE	1022	MAPLE	8''	GOOD	REMAIN	1118	SPRUCE	8''	GOOD	REMAIN
828	OAK	34"	GOOD	REMAIN	926	SPRUCE	12''	GOOD	REMOVE	1023	OAK	34''	GOOD	REMAIN	1119	SPRUCE	8''	GOOD	REMAIN
829	HEMLOCK	8"	GOOD	REMAIN	927	PINE	14''	GOOD	REMOVE	1024	CHERRY	8''	FAIR	REMAIN	1120	SPRUCE	8''	GOOD	REMAIN
830	OAK	28''	GOOD	REMAIN	928	PINE	8''	GOOD	REMOVE	1025	BIRCHERRY	18''	GOOD	REMAIN	1121	OAK	16''	GOOD	REMAIN
831	HO	8''	GOOD	REMAIN	929	PINE	12''	GOOD	REMOVE	1026	OAK	22''	GOOD	REMAIN	1122	OAK	16''	GOOD	REMAIN
832	OAK	24''	GOOD	REMAIN	930	PINE	12''	GOOD	REMOVE	1027	OAK	18''	GOOD	REMAIN	1123	PINE	12''	GOOD	REMAIN
833	OAK	20''	GOOD	REMAIN	931	PINE	10''	GOOD	REMOVE	1028	MAPLE	12''	GOOD	REMAIN	1124	PINE	12''	GOOD	REMAIN
834	MAPLE	8''	GOOD	REMAIN	932	TREE OF HEAVEN	10" 12"	FAIR	REMOVE	1029	OAK	34''	GOOD	REMAIN	1125	PINE	10''	GOOD	REMAIN
835	OAK	32''	GOOD	REMAIN	933	TREE OF HEAVEN	8" 18"	FAIR	REMOVE	1030	MAPLE	12''	GOOD	REMAIN	1126	PINE	10''	GOOD	REMAIN
836	DOGWOOD	8''	GOOD	REMOVE	934	TREE OF HEAVEN	8''	FAIR	REMOVE	1031	MAPLE	12''	GOOD	REMOVE	1127	PINE	8''	GOOD	REMAIN
837	OAK	36''	GOOD	REMAIN	935	TREE OF HEAVEN	16''	FAIR	REMOVE	1032	MAPLE	14''	GOOD	REMAIN	1128	PINE	10''	GOOD	REMAIN
838	OAK	22''	GOOD	REMAIN	936	TREE OF HEAVEN	12''	FAIR	REMOVE	1033	HICKORY	10''	GOOD	REMAIN	1129	PINE	12''	GOOD	REMAIN
839	MAPLE	8''	GOOD	REMAIN	937	MAPLE	8''	GOOD	REMAIN	1034	BIRCHERRY	10''	GOOD	REMAIN	1130	PINE	12''	GOOD	REMAIN
840	MAPLE	12''	GOOD	REMOVE	938	MAPLE	8''	GOOD	REMAIN	1035	HICKORY	24''	GOOD	REMAIN	1131	PINE	14''	GOOD	REMAIN
841	MAPLE	10''	GOOD	REMOVE	939	OAK	14''	GOOD	REMAIN	1036	MAPLE	8''	GOOD	REMAIN	1132	DOGWOOD	8''	GOOD	REMAIN
842	CHERRY	8''	FAIR	REMOVE	940	OAK	28''	GOOD	REMAIN	1037	OAK	24''	GOOD	REMOVE	1133	SASSAFRAS	8" MU	GOOD	REMAIN
843	CHERRY	8''	FAIR	REMOVE	941	MAPLE	8''	GOOD	REMAIN	1038	OAK	28''	GOOD	REMAIN	1134	DOGWOOD	8''	GOOD	REMAIN
844	DOGWOOD	12''	GOOD	REMOVE	942	OAK	28''	GOOD	REMAIN	1039	BEECH	8''	GOOD	REMAIN	1135	OAK	18''	GOOD	REMAIN
845	MAPLE	10''	GOOD	REMOVE	943	MAPLE	26''	GOOD	REMAIN	1040	BIRCHERRY	24''	GOOD	REMAIN	1136	PINE	8''	GOOD	REMAIN
846	HEMLOCK	20''	GOOD	REMOVE	944	OAK	38''	GOOD	REMAIN	1041	OAK	30''	GOOD	REMAIN	1137	PINE	10''	GOOD	REMAIN
847	MAPLE	16''	GOOD	REMAIN	945	OAK	20''	GOOD	REMAIN	1042	MAPLE	8''	GOOD	REMAIN	1138	HEMLOCK	8''	GOOD	REMAIN
848	MAGNOLIA	16''	GOOD	REMOVE	946	MAPLE	24''	GOOD	REMAIN	1043	MAPLE	14''	GOOD	REMAIN	1139	SPRUCE	10''	GOOD	REMAIN
849	HEMLOCK	20''	GOOD	REMAIN	947	MAPLE	8''	GOOD	REMAIN	1044	MAPLE	8 TW	GOOD	REMAIN	1140	SPRUCE	8''	GOOD	REMAIN
850	LOCUST	20''	POOR	REMOVE	948	HICKORY	22''	GOOD	REMAIN	1045	MAPLE	8''	GOOD	REMAIN	1141	SPRUCE	10''	GOOD	REMOVE
851	MAPLE	14''	GOOD	REMAIN	949	BIRCH	8''	GOOD	REMAIN	1046	FIR	12''	GOOD	REMAIN	1142	SPRUCE	8''	GOOD	REMOVE
852	MAPLE	26''	GOOD	REMOVE	950	OAK	36''	GOOD	REMAIN	1047	MAGNOLIA	14" MU	GOOD	REMAIN	1143	SPRUCE	8''	GOOD	REMAIN
853	HO	8''	FAIR	REMOVE	951	OAK	24''	GOOD	REMAIN	1048	PINE	14''	GOOD	REMAIN	1144	SPRUCE	12''	GOOD	REMAIN
854	MAPLE	16''	GOOD	REMAIN	952	OAK	20''	GOOD	REMAIN	1049	PINE	16''	GOOD	REMAIN	1145	SPRUCE	8''	GOOD	REMAIN
856	MAPLE	16''	GOOD	REMOVE	953	MAPLE	8''	GOOD	REMAIN	1050	PINE	8''	GOOD	REMAIN	1146	SPRUCE	8''	GOOD	REMAIN
857	DECIDUOUS	12''	GOOD	REMOVE	954	MAPLE	8''	GOOD	REMAIN	1051	PINE	8''	GOOD	REMAIN	1147	SPRUCE	10''	GOOD	REMAIN
858	DECIDUOUS	10''	GOOD	REMOVE	955	OAK	20''	GOOD	REMAIN	1052	PINE	8''	GOOD	REMAIN	1148	SPRUCE	8''	GOOD	REMAIN
859	TREE OF HEAVEN	8''	FAIR	REMOVE	956	MAPLE	8''	GOOD	REMAIN	1053	SPRUCE	12''	GOOD	REMAIN	1149	SPRUCE	10''	GOOD	REMOVE
860	TREE OF HEAVEN	14''	FAIR	REMOVE	957	OAK	34''	GOOD	REMAIN	1054	SPRUCE	8''	GOOD	REMAIN	1150	SPRUCE	12''	GOOD	REMAIN
861	MAPLE	8''	GOOD	REMOVE	958	MAPLE	8''	GOOD	REMOVE	1055	SPRUCE	8''	GOOD	REMAIN	1151	SPRUCE	8''	GOOD	REMOVE
862	ASH	10''	POOR	REMOVE	960	MAPLE	8''	GOOD	REMOVE	1056	SPRUCE	8''	GOOD	REMAIN					
863	SYCAMORE	36''	GOOD	REMOVE	961	BIRCH	10''	GOOD	REMAIN	1057	MAPLE	14''	GOOD	REMAIN					
864	MAPLE	12''	GOOD	REMOVE	962	OAK	34''	GOOD	REMAIN	1058	SPRUCE	10''	GOOD	REMAIN					
865	LOCUST	28''	GOOD	REMOVE	963	BIRCH	14''	GOOD	REMAIN	1059	SPRUCE	8''	GOOD	REMAIN					
866	LOCUST	24''	GOOD	REMOVE	964	MAPLE	8''	GOOD	REMAIN	1060	MAPLE	14''	GOOD	REMAIN					
867	TREE OF HEAVEN	12''	FAIR	REMOVE	965	BIRCH	8''	GOOD	REMAIN	1061	SPRUCE	16''	GOOD	REMAIN					
868	MAPLE	16''	GOOD	REMOVE	966	MAPLE	8''	GOOD	REMAIN	1062	SPRUCE	16''	GOOD	REMAIN					
869	CHERRY	20''	FAIR	REMOVE	967	MAPLE	8''	GOOD	REMAIN	1063	SPRUCE	12''	GOOD	REMAIN					
870	MAPLE	24''	GOOD	REMOVE	968	OAK	20''	GOOD	REMAIN	1064	SPRUCE	12''	GOOD	REMAIN					
871	CHERRY	16''	FAIR	REMOVE	969	OAK	28''	GOOD	REMAIN	1065	SPRUCE	10''	GOOD	REMAIN					
872	MAPLE	26''	GOOD	REMOVE	970	HICKORY	8''	GOOD	REMAIN	1066	SPRUCE	12''	GOOD	REMAIN					
873	MAPLE	14''	GOOD	REMOVE	971	MAPLE	12''	GOOD	REMAIN	1067	SPRUCE	16''	GOOD	REMAIN					
874	ASH	12''	FAIR	REMOVE	972	OAK	16''	GOOD	REMAIN	1068	MAPLE	8''	GOOD	REMAIN					
875	MAPLE	22''	GOOD	REMOVE	973	OAK	22''	GOOD	REMAIN	1069	LOCUST	8" TW	GOOD	REMAIN					
876	CHERRY	16''	FAIR	REMOVE	974	BIRCH	8''	GOOD	REMAIN	1070	SPRUCE	12''	GOOD	REMAIN					
877	MULBERRY	8''	GOOD	REMOVE	975	MAPLE	8''	GOOD	REMAIN	1071	SPRUCE	12''	GOOD	REMAIN					
878	MAPLE	16''	GOOD	REMOVE	976	DOGWOOD	8''	GOOD	REMAIN	1072	SPRUCE	14''	GOOD	REMAIN					
879	MAPLE	16''	GOOD	REMOVE	977	HICKORY	8''	GOOD	REMAIN	1073	MAPLE	14''	GOOD	REMAIN					
880	ASH	18''	FAIR	REMOVE	978	CH	8''	FAIR	REMAIN	1074	PINE	14''	GOOD	REMAIN					
881	ASH	14''	FAIR	REMOVE	979	CD	8''	GOOD	REMAIN	1075	PINE	16''	GOOD	REMAIN					
883	SPRUCE	8''	GOOD	REMOVE	980	MAPLE	12''	GOOD	REMAIN	1076	CEDAR	10" TW	GOOD	REMOVE					
884	SPRUCE	8''	GOOD	REMOVE	981	MAPLE	16''	GOOD	REMAIN	1077	PINE	8''	GOOD	REMOVE					
885	SPRUCE	8''	GOOD	REMOVE	982	MAPLE	8''	GOOD	REMAIN	1078	PINE	16''	GOOD	REMOVE					
886	SPRUCE	8''	GOOD	REMOVE	983	BIRCH	14''	GOOD	REMAIN	1079	MAPLE	12''	GOOD	REMOVE					
887	PINE	12''	GOOD	REMOVE	984	MAPLE	24''	GOOD	REMAIN	1080	SPRUCE	8''	GOOD	REMOVE					
888	PINE	8''	GOOD	REMOVE	985	OAK	12''	GOOD	REMAIN	1081	SPRUCE	8''	GOOD	REMOVE					
889	SYCAMORE	10''	GOOD	REMOVE	986	TREE OF HEAVEN	8''	FAIR	REMAIN	1082	SPRUCE	8''	GOOD	REMOVE					
890	SYCAMORE	8''	GOOD	REMOVE	987	BEECH	10''	GOOD	REMAIN	1083	SPRUCE	8''	GOOD	REMAIN					
891	SYCAMORE	10''	GOOD	REMOVE	988	MAPLE	18''	GOOD	REMAIN	1084	SPRUCE	10''	GOOD	REMOVE					
892	PINE	10''	GOOD	REMOVE	989	MAPLE	8''	GOOD	REMAIN	1085	SPRUCE	12''	GOOD	REMOVE					
893	PINE	8''	GOOD	REMOVE	990	MAPLE	8''	GOOD	REMAIN	1086	MAPLE	12''	GOOD	REMOVE					
894	PINE	12''	GOOD	REMOVE	991	OAK	28''	GOOD	REMAIN	1087	MAPLE	12''	GOOD	REMOVE					
895	LOCUST	14''	GOOD	REMOVE	992	OAK	30''	GOOD	REMAIN	1088	PINE	22''	GOOD	REMOVE					
896	PINE	8''	GOOD	REMOVE	993	MAPLE	10''	GOOD	REMAIN	1089	HEMLOCK	14''	GOOD	REMOVE					
897	PINE	8''	GOOD	REMOVE	994	HICKORY	12''	GOOD	REMAIN	1090	HEMLOCK	8''	GOOD	REMOVE					
898	PINE	8''	GOOD	REMOVE	995	HICKORY	28''	GOOD	REMAIN	1091	HEMLOCK	12''	GOOD	REMOVE					
899	PINE	8''	GOOD	REMOVE	996	OAK	24''	GOOD	REMAIN	1092	OAK	14''	GOOD	REMOVE					

TREE SUMMARY

EXISTING TREES	1,091
EXISTING TREES TO BE REMOVED	678
EXISTING TREES TO REMAIN	413
PROPOSED TREES TO BE PLANTED	898

NOTES:

1. EXISTING CONDITIONS DEPICTED ON THIS PLAN HAVE BEEN TAKEN FROM SURVEY TITLED, "PARCEL COMPILATION SURVEY DEPICTING LAND OF MBIA INSURANCE CORP.," PREPARED BY JOHN MEYER CONSULTING, DATED 09/30/2005 AND SUPPLEMENTED WITH SURVEY TITLED, "TOPOGRAPHIC SURVEY," PREPARED BY JMC PLANNING, ENGINEERING, LANDSCAPE ARCHITECTURE & LAND SURVEYING, PLLC, DATED 02/10/2022.
2. EXISTING TREES DEPICTED HEREON ARE BASED ON A FIELD SURVEY PERFORMED BY JMC PLANNING, ENGINEERING, LANDSCAPE ARCHITECTURE & LAND SURVEYING, PLLC, IN MARCH, 2019, SUPPLEMENTED WITH ADDITIONAL TREE SURVEY, DATED 10/31/2022.

No.	Revision	Date	By
1.	REVISED FEIS	01/20/2023	BMS
2.	PLANNING BOARD SUBMISSION	10/06/2023	BMS
3.	TOWN CONSERVATION BOARD SUBMISSION	10/31/2023	BMS
4.	PLANNING BOARD RESUBMISSION	11/10/2023	BMS
5.	PLANNING BOARD RESUBMISSION	12/21/2023	BMS

Previous Editions Obsolete

APPLICANT/OWNER:
AIRPORT CAMPUS I–V LLC
46 WESTCHESTER AVENUE
POUND RIDGE, NY 10576

JMC Planning, Engineering, Landscape Architecture & Land Surveying, PLLC
JMC Site Development Consultants, LLC
John Meyer Consulting, Inc.
120 BEDFORD ROAD • ARMONK, NY 10504
voice 914.273.5225 • fax 914.273.2102
www.jmcpllc.com

JMC

TREE PROTECTION TABLE (PART C)
AIRPORT CAMPUS
113 KING STREET (NY ROUTE 120)
NORTH CASTLE, NY 10504

ANY ALTERATION OF PLANS, SPECIFICATIONS, PLATS AND REPORTS BEARING THE SEAL OF A LICENSED PROFESSIONAL ENGINEER OR LICENSED LAND SURVEYOR IS A VIOLATION OF ARTICLE 145 OF THE NEW YORK STATE EDUCATION LAW, EXCEPT AS PROVIDED FOR BY SECTION 7209, SUBSECTION 2.

APPROVED BY TOWN OF NORTH CASTLE PLANNING BOARD RESOLUTION, DATED ________

________ DATE: ________
CHRISTOPHER CARTHY, CHAIRMAN,
TOWN OF NORTH CASTLE PLANNING BOARD

ENGINEERING PLANS REVIEWED FOR CONFORMANCE TO RESOLUTION

________ DATE: ________
JOSEPH M. CERMELE, PE
KSCJ CONSULTING
CONSULTING TOWN ENGINEERS

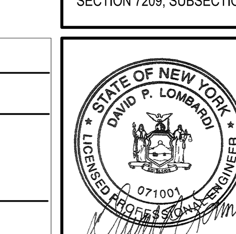

Drawn: BMS	Approved: AG	
Scale: –		
Date: 09/21/2022		
Project No: 15072		
15072-TREE	C-155	TREE.scr
Drawing No: C–155		

NOT FOR CONSTRUCTION

COPYRIGHT © 2023 by JMC All Rights Reserved. No part of this document may be reproduced, stored in a retrieval system, or transmitted in any form or by means, electronic, mechanical, photocopying, recording or otherwise, without the prior written permission of JMC PLANNING, ENGINEERING, LANDSCAPE ARCHITECTURE & LAND SURVEYING, PLLC | JMC SITE DEVELOPMENT CONSULTANTS, LLC | JOHN MEYER CONSULTING, INC. (JMC). Any modifications or alterations to this document without the written permission of JMC shall render them invalid and unusable.

LEGEND

- EXISTING PROPERTY LINE
- ADJACENT PROPERTY LINE
- EXISTING EASEMENT LINE
- EXISTING WETLAND LINE AND DELINEATION
- EXISTING WETLAND BUFFER
- EXISTING BUILDING OVERHANG
- EXISTING BUILDING
- EXISTING PAVEMENT EDGE / CURB LINE
- EXISTING CONTOUR
- EXISTING INDEX CONTOUR
- EXISTING SPOT GRADE
- EXISTING STONE WALL
- EXISTING RETAINING WALL
- EXISTING FENCE
- EXISTING DRAIN INLET
- EXISTING MANHOLE
- EXISTING UTILITY POLE
- EXISTING LIGHT POLE
- EXISTING SIGN
- EXISTING BUILDING TO REMAIN
- PROPOSED BUILDING LINE
- PROPOSED CONCRETE CURB
- PROPOSED CONCRETE SIDEWALK
- PROPOSED DROP CURB AND RAMP
- PROPOSED FINISHED GRADE
- PROPOSED SPOT GRADE
- PROPOSED SANITARY SEWER MANHOLE
- PROPOSED STORM DRAIN MANHOLE
- PROPOSED TYPE C1 DRAIN INLET
- PROPOSED TYPE D1 DRAIN INLET
- PROPOSED TYPE L1 DRAIN LAWN INLET
- PROPOSED HEADWALL
- PROPOSED WATER QUALITY STRUCTURE
- PROPOSED BYPASS MANHOLE
- PROPOSED OUTLET CONTROL STRUCTURE
- PROPOSED HYDRANT
- PROPOSED RETAINING WALL (DESIGN BY OTHERS)
- PROPOSED LIGHTING STANDARD (DESIGN BY OTHERS)
- TEST PIT/BORING LOCATION AND DESIGNATION
- PROPOSED LIMIT OF DISTURBANCE
- PROPOSED DITCH OR SWALE
- PROPOSED RIP-RAP
- T.W. TOP OF FOUNDATION WALL ELEVATION
- G.F. GARAGE FLOOR ELEVATION (DOOR)
- B.F. BASEMENT FLOOR ELEVATION

NOTES:

1. EXISTING CONDITIONS DEPICTED ON THIS PLAN HAVE BEEN TAKEN FROM SURVEY TITLED, "PARCEL COMPILATION SURVEY DEPICTING LAND OF MBIA INSURANCE CORP.," PREPARED BY JOHN MEYER CONSULTING, DATED 09/30/2005.
2. GEOTECHNICAL BORING/TEST PIT LOCATIONS DEPICTED ON THIS PLAN WERE TAKEN FROM THE GEOTECHNICAL REPORT ENTITLED, "LETTER REPORT ON SUBSURFACE SOIL AND GROUNDWATER INVESTIGATION", DATED 12/20/2021, PREPARED BY CARLIN SIMPSON & ASSOCIATES, LLC.
3. ALL STORMWATER MANAGEMENT PRACTICES SHALL REMAIN UNDISTURBED AND BE PROTECTED FROM HEAVY MACHINERY TRAFFIC DURING CONSTRUCTION. HOWEVER DURING CONSTRUCTION OF THE PRACTICE THE CONTRACTOR SHALL MINIMIZE AND AVOID HEAVY MACHINERY TRAFFIC TO THE MAXIMUM EXTENT PRACTICABLE. THERE SHALL BE NO STORAGE OF MATERIALS WITHIN AREAS TO BE USED FOR STORMWATER MANAGEMENT PRACTICES. THE CONTRACTOR SHALL INSTALL CONSTRUCTION FENCE AROUND THE PRACTICE TO DISCOURAGE VEHICLE TRAFFIC.
4. ALL FILLS SHALL BE COMPACTED TO PROVIDE STABILITY OF MATERIAL AND TO PREVENT SETTLEMENT.
5. EXCAVATIONS AND FILLS SHALL NOT ENDANGER ADJOINING PROPERTIES, NOR DIVERT WATER ONTO THE PROPERTY OF OTHERS AT ANY TIME DURING THE COURSE OF CONSTRUCTION.
6. CONTRACTOR SHALL REFER TO EROSION AND SEDIMENT CONTROL PLAN FOR FURTHER DIRECTION REGARDING SITE STABILIZATION THROUGHOUT THE COURSE OF CONSTRUCTION.

(PROPOSED GRADE) BW ±0 ±FW (PROPOSED GRADE)

RETAINING WALL SPOT GRADE LEGEND

No.	Revision	Date	By
1.	REVISED FEIS	01/20/2023	BMS
2.	PLANNING BOARD SUBMISSION	10/06/2023	BMS
3.	TOWN CONSERVATION BOARD SUBMISSION	10/31/2023	BMS
4.	PLANNING BOARD RESUBMISSION	11/10/2023	BMS
5.	PLANNING BOARD RESUBMISSION	12/21/2023	BMS

Previous Editions Obsolete

APPLICANT/OWNER:

AIRPORT CAMPUS I-V LLC
40 WESTCHESTER AVENUE
POUND RIDGE, NY 10576

JMC Planning, Engineering, Landscape Architecture & Land Surveying, PLLC
JMC Site Development Consultants, LLC
John Meyer Consulting, Inc.
120 BEDFORD ROAD • ARMONK, NY 10504
voice 914.273.5225 • fax 914.273.2102
www.jmcpllc.com

GRADING PLAN

AIRPORT CAMPUS
113 KING STREET (NY ROUTE 120)
NORTH CASTLE, NY 10504

ANY ALTERATION OF PLANS, SPECIFICATIONS, PLATS AND REPORTS BEARING THE SEAL OF A LICENSED PROFESSIONAL ENGINEER OR LICENSED LAND SURVEYOR IS A VIOLATION OF SECTION 7209 OF THE NEW YORK STATE EDUCATION LAW, EXCEPT AS PROVIDED FOR BY SECTION 7209, SUBSECTION 2.

APPROVED BY TOWN OF NORTH CASTLE PLANNING BOARD RESOLUTION, DATED _____

_____ DATE: _____
CHRISTOPHER CARTHY, CHAIRMAN,
TOWN OF NORTH CASTLE PLANNING BOARD

ENGINEERING PLANS REVIEWED FOR CONFORMANCE TO RESOLUTION

_____ DATE: _____
JOSEPH M. CERMELE, PE
KSCJ CONSULTING
CONSULTING TOWN ENGINEERS

GRAPHIC SCALE
40 0 20 40 80 160
(IN FEET)
1 inch = 40 ft.

STATE OF NEW YORK · DAVID P. LOMBARDI · 071001 · LICENSED PROFESSIONAL ENGINEER

Drawn:	BMS	Approved:	AG
Scale:	1" = 40'		
Date:	09/21/2022		
Project No:	15072		
15072-GRADING	C-201	GRAD.scr	
Drawing No:	C-201		

NOT FOR CONSTRUCTION

COPYRIGHT © 2023 by JMC All Rights Reserved. No part of this document may be reproduced, stored in a retrieval system, or transmitted in any form or by means, electronic, mechanical, photocopying, recording or otherwise, without the prior written permission of JMC PLANNING, ENGINEERING, LANDSCAPE ARCHITECTURE & LAND SURVEYING, PLLC | JMC SITE DEVELOPMENT CONSULTANTS, LLC | JOHN MEYER CONSULTING, INC. (JMC). Any modifications or alterations to this document without the written permission of JMC shall render them invalid and unusable.

LEGEND

- EXISTING PROPERTY LINE
- ADJACENT PROPERTY LINE
- EXISTING EASEMENT LINE
- EXISTING WETLAND LINE AND DELINEATION
- EXISTING WETLAND BUFFER
- EXISTING BUILDING OVERHANG
- EXISTING BUILDING
- EXISTING PAVEMENT EDGE / CURB LINE
- EXISTING CONTOUR
- EXISTING INDEX CONTOUR
- EXISTING SPOT GRADE
- EXISTING STONE WALL
- EXISTING RETAINING WALL
- EXISTING FENCE
- EXISTING DRAIN INLET
- EXISTING MANHOLE
- EXISTING UTILITY POLE
- EXISTING LIGHT POLE
- EXISTING SIGN
- EXISTING BUILDING TO REMAIN
- PROPOSED BUILDING LINE
- PROPOSED CONCRETE CURB
- PROPOSED CONCRETE SIDEWALK
- PROPOSED DROP CURB AND RAMP
- PROPOSED FINISHED GRADE
- PROPOSED SPOT GRADE
- PROPOSED SANITARY SEWER MANHOLE
- PROPOSED STORM DRAIN MANHOLE
- PROPOSED TYPE CI DRAIN INLET
- PROPOSED TYPE DI DRAIN INLET
- PROPOSED TYPE LI DRAIN LAWN INLET
- PROPOSED HEADWALL
- PROPOSED WATER QUALITY STRUCTURE
- PROPOSED BYPASS MANHOLE
- PROPOSED OUTLET CONTROL STRUCTURE
- PROPOSED HYDRANT
- PROPOSED RETAINING WALL (DESIGN BY OTHERS)
- PROPOSED LIGHTING STANDARD (DESIGN BY OTHERS)
- TEST PIT/BORING LOCATION AND DESIGNATION
- PROPOSED LIMIT OF DISTURBANCE
- PROPOSED DITCH OR SWALE
- PROPOSED RIP-RAP
- T.W. TOP OF FOUNDATION WALL ELEVATION
- G.F. GARAGE FLOOR ELEVATION (DOOR)
- B.F. BASEMENT FLOOR ELEVATION

NOTES:

1. EXISTING CONDITIONS DEPICTED ON THIS PLAN HAVE BEEN TAKEN FROM SURVEY TITLED, "PARCEL COMPILATION SURVEY DEPICTING LAND OF MBIA INSURANCE CORP.", PREPARED BY JOHN MEYER CONSULTING, DATED 09/30/2005.
2. GEOTECHNICAL BORING/TEST PIT LOCATIONS DEPICTED ON THIS PLAN WERE TAKEN FROM THE GEOTECHNICAL REPORT ENTITLED, "LETTER REPORT ON SUBSURFACE SOIL AND GROUNDWATER INVESTIGATION", DATED 12/20/2021, PREPARED BY CARLIN SIMPSON & ASSOCIATES, LLC.
3. ALL STORMWATER MANAGEMENT PRACTICES SHALL REMAIN UNDISTURBED AND BE PROTECTED FROM HEAVY MACHINERY TRAFFIC DURING CONSTRUCTION. HOWEVER DURING CONSTRUCTION OF THE PRACTICE THE CONTRACTOR SHALL MINIMIZE AND AVOID HEAVY MACHINERY TRAFFIC TO THE MAXIMUM EXTENT PRACTICABLE. THERE SHALL BE NO STORAGE OF MATERIALS WITHIN AREAS TO BE USED FOR STORMWATER MANAGEMENT PRACTICES. THE CONTRACTOR SHALL INSTALL CONSTRUCTION FENCE AROUND THE PRACTICE TO DISCOURAGE VEHICLE TRAFFIC.
4. ALL FILLS SHALL BE COMPACTED TO PROVIDE STABILITY OF MATERIAL AND TO PREVENT SETTLEMENT.
5. EXCAVATIONS AND FILLS SHALL NOT ENDANGER ADJOINING PROPERTIES, NOR DIVERT WATER ONTO THE PROPERTY OF OTHERS AT ANY TIME DURING THE COURSE OF CONSTRUCTION.
6. CONTRACTOR SHALL REFER TO EROSION AND SEDIMENT CONTROL PLAN FOR FURTHER DIRECTION REGARDING SITE STABILIZATION THROUGHOUT THE COURSE OF CONSTRUCTION.

(PROPOSED GRADE) BW ±0 ±FW (PROPOSED GRADE)

RETAINING WALL SPOT GRADE LEGEND

No.	Revision	Date	By
1.	REVISED FEIS	01/20/2023	BMS
2.	PLANNING BOARD SUBMISSION	10/06/2023	BMS
3.	TOWN CONSERVATION BOARD SUBMISSION	10/31/2023	BMS
4.	PLANNING BOARD RESUBMISSION	11/10/2023	BMS
	PLANNING BOARD RESUBMISSION	12/21/2023	BMS

Previous Editions Obsolete

APPLICANT/OWNER:

AIRPORT CAMPUS I-V LLC
80 NORTH CHESTER AVENUE
POUND RIDGE, NY 10576

JMC Planning, Engineering, Landscape Architecture & Land Surveying, PLLC
JMC Site Development Consultants, LLC
John Meyer Consulting, Inc.
120 BEDFORD ROAD - ARMONK, NY 10504
voice 914.273.5225 - fax 914.273.2102
www.jmcpllc.com

GRADING PLAN

AIRPORT CAMPUS
113 KING STREET (NY ROUTE 120)
NORTH CASTLE, NY 10504

ANY ALTERATION OF PLANS, SPECIFICATIONS, PLATS AND REPORTS BEARING THE SEAL OF A LICENSED PROFESSIONAL ENGINEER OR LICENSED LAND SURVEYOR IS A VIOLATION OF SECTION 7209 OF THE NEW YORK STATE EDUCATION LAW, EXCEPT AS PROVIDED FOR BY SECTION 7209, SUBSECTION 2.

APPROVED BY TOWN OF NORTH CASTLE PLANNING BOARD RESOLUTION, DATED _____

_____ DATE: _____
CHRISTOPHER CARTHY, CHAIRMAN,
TOWN OF NORTH CASTLE PLANNING BOARD

ENGINEERING PLANS REVIEWED FOR CONFORMANCE TO RESOLUTION

_____ DATE: _____
JOSEPH M. CERMELE, PE
KSCJ CONSULTING
CONSULTING TOWN ENGINEERS

STATE OF NEW YORK · DAVID P. LOMBARDI · 071001 · LICENSED PROFESSIONAL ENGINEER

GRAPHIC SCALE
40 0 20 40 80 160
(IN FEET)
1 inch = 40 ft.

Drawn:	BMS	Approved:	AG
Scale:	1" = 40'		
Date:	09/21/2022		
Project No:	15072		
15072-DWG	C-202	GRAD.scr	
Drawing No:	C-202		

NOT FOR CONSTRUCTION

COPYRIGHT © 2023 by JMC All Rights Reserved. No part of this document may be reproduced, stored in a retrieval system, or transmitted, in any form or by means, electronic, mechanical, photocopying, recording or otherwise, without the prior written permission of JMC PLANNING, ENGINEERING, LANDSCAPE ARCHITECTURE & LAND SURVEYING, PLLC (JMC). Any modifications or alterations to this document without the written permission of JMC shall render them invalid and unusable.

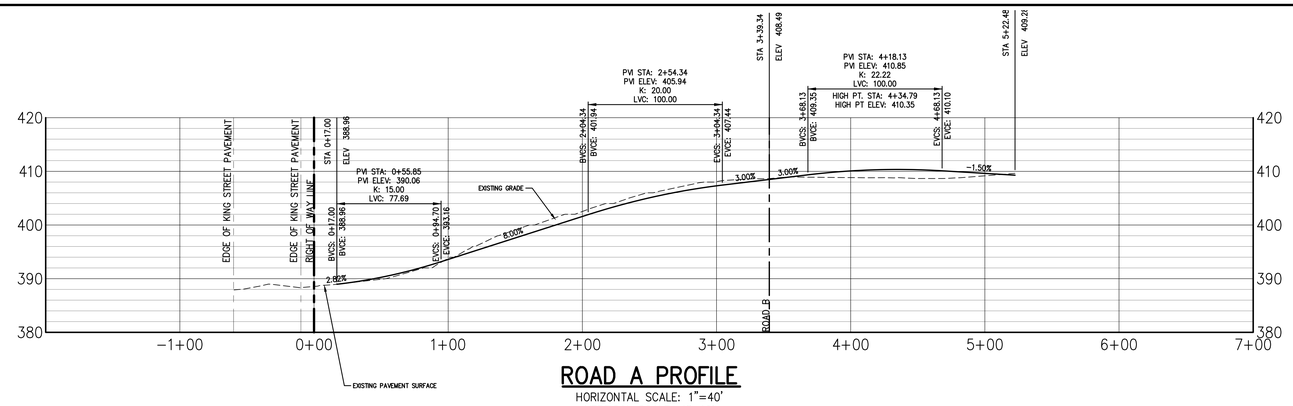

ROAD A PROFILE

HORIZONTAL SCALE: 1"=40'
VERTICAL SCALE: 1"=10'

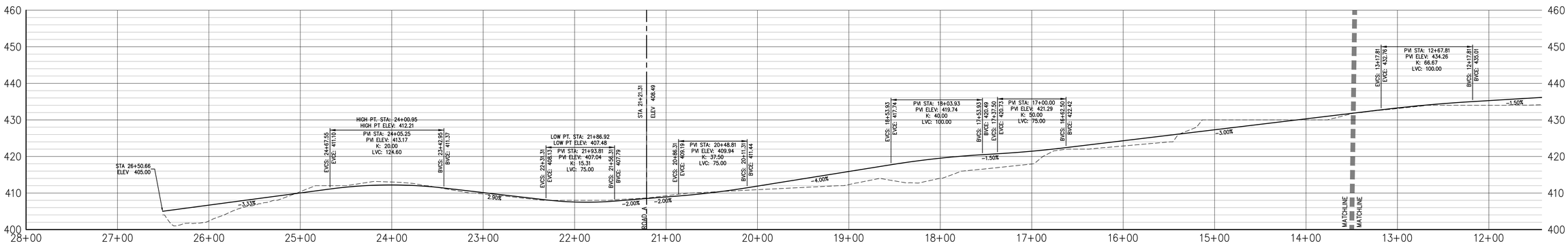

ROAD B PROFILE

HORIZONTAL SCALE: 1"=40'
VERTICAL SCALE: 1"=10'

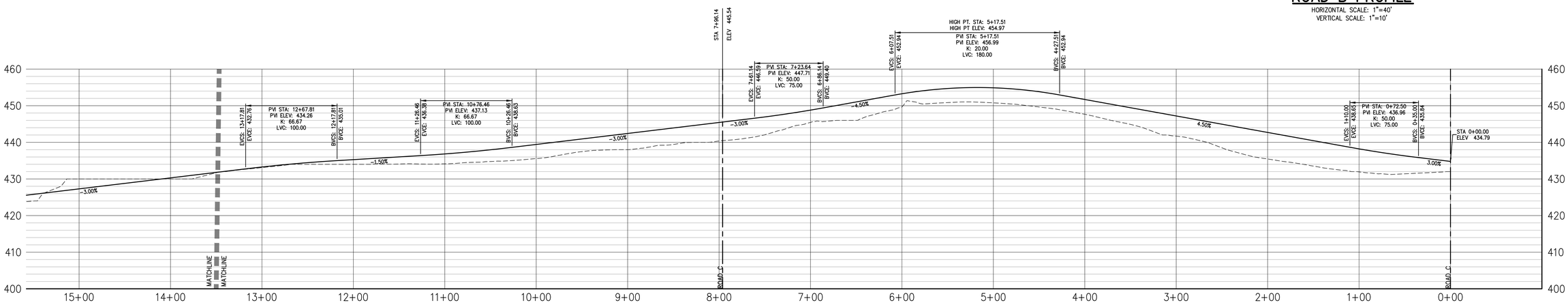

ROAD B PROFILE

HORIZONTAL SCALE: 1"=40'
VERTICAL SCALE: 1"=10'

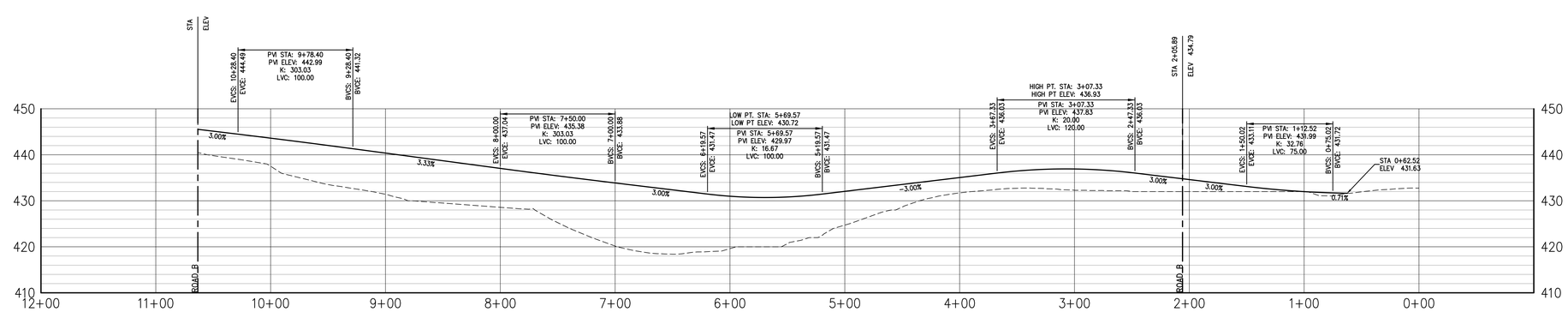

ROAD C PROFILE

HORIZONTAL SCALE: 1"=40'
VERTICAL SCALE: 1"=10'

APPROVED BY TOWN OF NORTH CASTLE PLANNING BOARD RESOLUTION, DATED _____

_____ DATE: _____
CHRISTOPHER CARTHY, CHAIRMAN,
TOWN OF NORTH CASTLE PLANNING BOARD

ENGINEERING PLANS REVIEWED FOR CONFORMANCE TO RESOLUTION

_____ DATE: _____
JOSEPH M. CERMELE, PE
KSCJ CONSULTING
CONSULTING TOWN ENGINEERS

GRAPHIC SCALE
40 0 20 40 80 160
(IN FEET)
1 inch = 40 ft.

No.	Revision	Date	By
1.	PLANNING BOARD SUBMISSION	10/06/2023	BMS
2.	PLANNING BOARD RESUBMISSION	11/10/2023	BMS
	PLANNING BOARD RESUBMISSION	12/21/2023	BMS

Previous Editions Obsolete

APPLICANT/OWNER:
AIRPORT CAMPUS I-V LLC
45 WESTCHESTER AVENUE
POUND RIDGE, NY 10576

JMC Planning, Engineering, Landscape Architecture & Land Surveying, PLLC
JMC Site Development Consultants, LLC
John Meyer Consulting, Inc.
120 BEDFORD ROAD • ARMONK, NY 10504
voice 914.273.5225 • fax 914.273.2102
www.jmcpllc.com

ROAD PROFILES

AIRPORT CAMPUS
113 KING STREET (NY ROUTE 120)
NORTH CASTLE, NY 10504

ANY ALTERATION OF PLANS, SPECIFICATIONS, PLATS AND REPORTS BEARING THE SEAL OF A LICENSED PROFESSIONAL ENGINEER OR LICENSED LAND SURVEYOR IS A VIOLATION OF SECTION 7209 OF THE NEW YORK STATE EDUCATION LAW, EXCEPT AS PROVIDED FOR BY SECTION 7209, SUBSECTION 2.

STATE OF NEW YORK • DAVID P. LOMBARDI • 071001 • LICENSED PROFESSIONAL ENGINEER

Drawn:	BMS	Approved:	AG
Scale:	1" = 40'		
Date:	10/06/2023		
Project No:	15072		
15072-GRADING	C-210	GRAD.scr	
Drawing No:	C-210		

COPYRIGHT © by by JMC all rights reserved. No part of this document may be reproduced, stored in a retrieval system, or transmitted, in any form or by means, electronic, mechanical, photocopying, recording or otherwise, without the prior written permission of JMC PLANNING, ENGINEERING, LANDSCAPE ARCHITECTURE & LAND SURVEYING, PLLC | JMC SITE DEVELOPMENT CONSULTANTS, LLC | JOHN MEYER CONSULTING, INC. (JMC). No alterations or additions to this document shall be made without the written permission of JMC and under their seals and signatures.

NOT FOR CONSTRUCTION

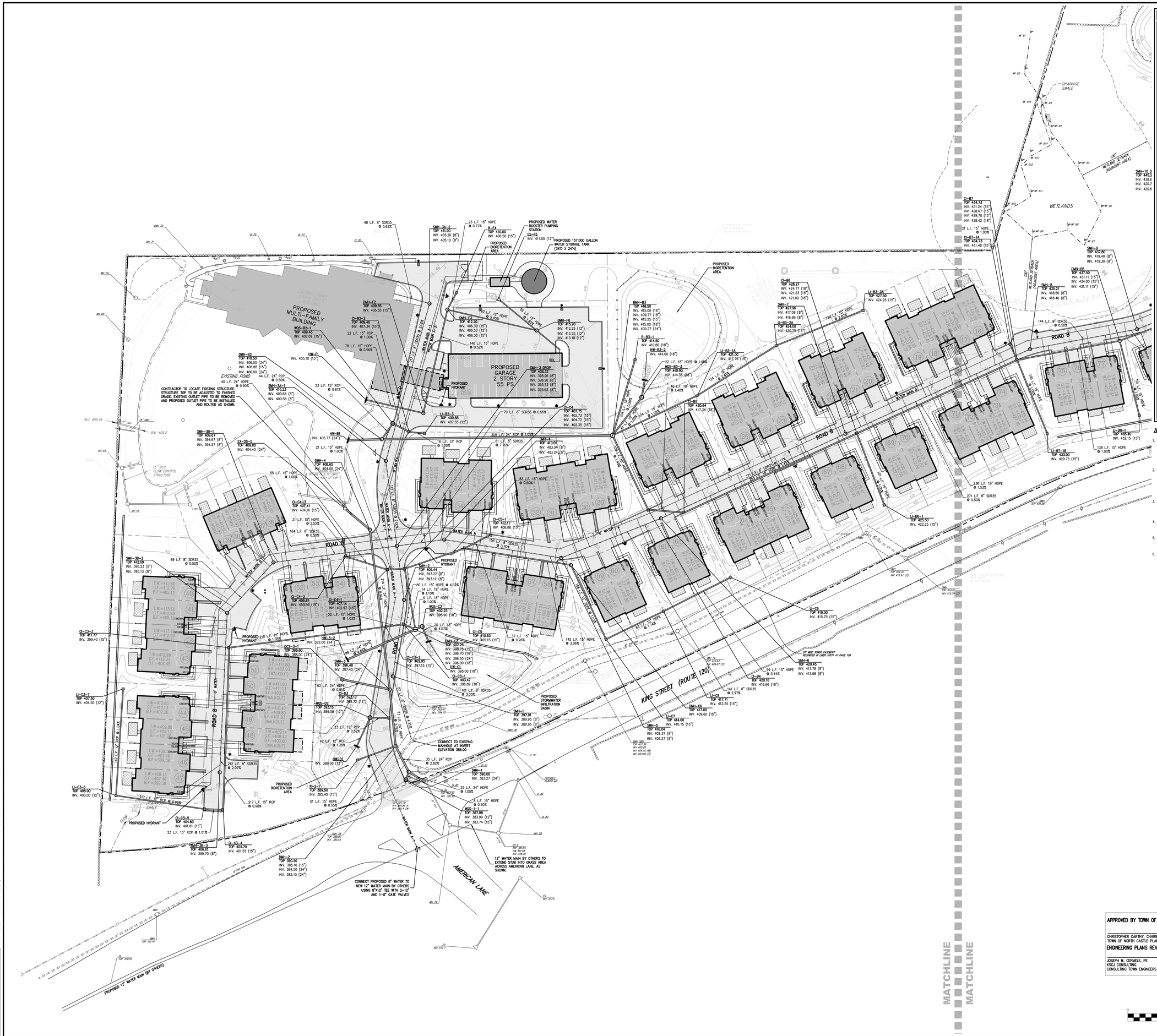

LEGEND

- EXISTING PROPERTY LINE
- ADJACENT PROPERTY LINE
- EXISTING EASEMENT LINE
- EXISTING WETLAND LINE AND DELINEATION
- WETLAND BUFFER
- EXISTING BUILDING OVERHANG
- EXISTING BUILDING LINE
- EXISTING PAVEMENT EDGE/CURB LINE
- EXISTING STONE WALL
- EXISTING RETAINING WALL
- EXISTING FENCE
- EXISTING STORM DRAIN LINE AND SIZE
- EXISTING SANITARY LINE AND SIZE
- EXISTING WATER LINE
- EXISTING GAS LINE
- EXISTING OVERHEAD WIRES
- EXISTING DRAIN INLET
- EXISTING MANHOLE
- EXISTING FIRE HYDRANT
- EXISTING GAS VALVE
- EXISTING WATER VALVE
- EXISTING UTILITY POLE
- EXISTING LIGHT POLE
- EXISTING SIGN
- EXISTING BUILDING TO REMAIN
- PROPOSED BUILDING
- PROPOSED CONCRETE CURB
- PROPOSED CONCRETE SIDEWALK
- SMH PROPOSED SANITARY SEWER MANHOLE
- DMH PROPOSED STORM DRAIN MANHOLE
- PROPOSED TYPE C DRAIN INLET
- DI PROPOSED TYPE DI DRAIN INLET
- LI PROPOSED TYPE LI DRAIN LAWN INLET
- HW PROPOSED HEADWALL
- WQS PROPOSED WATER QUALITY STRUCTURE
- OCS PROPOSED OUTLET CONTROL STRUCTURE
- CO PROPOSED CLEANOUT
- PROPOSED HYDRANT
- 15" HDPE PROPOSED STORM DRAIN LINE & SIZE
- 8" PVC PROPOSED SANITARY SEWER LINE & SIZE
- PROPOSED WATER LINE
- PROPOSED WATER VALVE
- PROPOSED RETAINING WALL (DESIGN BY OTHERS)

NOTES:

1. EXISTING CONDITIONS DEPICTED ON THIS PLAN HAVE BEEN TAKEN FROM SURVEY TITLED, "PARCEL COMPILATION SURVEY DEPICTING LAND OF MBA INSURANCE CORP.," PREPARED BY JOHN MEYER CONSULTING, DATED 09/30/2005 AND SUPPLEMENTED WITH SURVEY TITLED, "TOPOGRAPHIC SURVEY," PREPARED BY JMC PLANNING, ENGINEERING, LANDSCAPE ARCHITECTURE & LAND SURVEYING, PLLC, DATED 02/10/2022.
2. ALL STORMWATER MANAGEMENT PRACTICES SHALL REMAIN UNDISTURBED AND BE PROTECTED FROM HEAVY MACHINERY TRAFFIC DURING CONSTRUCTION. HOWEVER DURING CONSTRUCTION OF THE PRACTICE THE CONTRACTOR SHALL MINIMIZE AND AVOID HEAVY MACHINERY TRAFFIC TO THE MAXIMUM EXTENT PRACTICABLE. THERE SHALL BE NO STORAGE OF MATERIALS WITHIN AREAS TO BE USED FOR STORMWATER MANAGEMENT PRACTICES. THE CONTRACTOR SHALL INSTALL CONSTRUCTION FENCE AROUND THE PRACTICE TO DISCOURAGE VEHICLE TRAFFIC.
3. UNLESS OTHERWISE SPECIFIED, PIPE FOR STORM DRAINS SHALL BE HIGH DENSITY POLYETHYLENE PIPE (HDPE) WITH A SMOOTH INTERIOR AND ANNULAR EXTERIOR CORRUGATIONS IN ACCORDANCE WITH ASTM F-2648. JOINTS SHALL BE WATERTIGHT IN ACCORDANCE WITH ASTM D-3212.
4. UNLESS OTHERWISE SPECIFIED, PIPE FOR SANITARY SEWER GRAVITY LINES SHALL BE POLYVINYL CHLORIDE PIPE (PVCP), SDR-35, WITH PUSH-ON JOINTS IN ACCORDANCE WITH ASTM D-3034 AND D-3212.
5. UNLESS OTHERWISE SPECIFIED, PIPE FOR WATER LINES SHALL BE DOUBLE CEMENT-LINED DUCTILE IRON PIPE (DIP), CLASS 56, WITH PUSH ON JOINTS IN ACCORDANCE WITH AWWA C-150, C-151, C-104 AND C-111.
6. ELECTRIC, TELEPHONE, FIRE ALARM AND CABLE TELEVISION LINES SHALL BE INSTALLED UNDERGROUND IN CONDUIT IN ACCORDANCE WITH THE REQUIREMENTS OF THE UTILITY COMPANY HAVING JURISDICTION.

No.	Revision	Date	By
1.	REVISED FEIS	01/20/2023	BMS
2.	PLANNING BOARD SUBMISSION	10/06/2023	BMS
3.	PLANNING BOARD RESUBMISSION	11/10/2023	BMS
4.	PLANNING BOARD RESUBMISSION	12/21/2023	BMS

Previous Editions Obsolete

APPLICANT/OWNER:

AIRPORT CAMPUS I-V LLC
113 KING STREET (NY ROUTE 120)
POUND RIDGE, NY 10576

JMC Planning, Engineering, Landscape Architecture & Land Surveying, PLLC
JMC Site Development Consultants, LLC
John Meyer Consulting, Inc.
120 BEDFORD ROAD - ARMONK, NY 10504
voice 914.273.5225 - fax 914.273.2102
www.jmcpllc.com

UTILITIES PLAN

AIRPORT CAMPUS
113 KING STREET (NY ROUTE 120)
NORTH CASTLE, NY 10504

ANY ALTERATION OF PLANS, SPECIFICATIONS, PLATS AND REPORTS BEARING THE SEAL OF A LICENSED PROFESSIONAL ENGINEER OR LICENSED LAND SURVEYOR IS A VIOLATION OF SECTION 7209 OF THE NEW YORK STATE EDUCATION LAW, EXCEPT AS PROVIDED FOR BY SECTION 7209, SUBSECTION 2.

APPROVED BY TOWN OF NORTH CASTLE PLANNING BOARD RESOLUTION, DATED _____

_____ DATE: _____
CHRISTOPHER CARTHY, CHAIRMAN,
TOWN OF NORTH CASTLE PLANNING BOARD

ENGINEERING PLANS REVIEWED FOR CONFORMANCE TO RESOLUTION

_____ DATE: _____
JOSEPH M. CERMELE, PE
KSCJ CONSULTING
CONSULTING TOWN ENGINEERS

STATE OF NEW YORK · DAVID P. LOUNSBURY · LICENSED PROFESSIONAL ENGINEER · No. 071007

GRAPHIC SCALE
40 0 20 40 80 160
(IN FEET)
1 inch = 40 ft.

Drawn:	BMS	Approved:	AG
Scale:	1" = 40'		
Date:	09/21/2022		
Project No:	15072		
15072-UTILITIES	C-301	UTIL.scr	
Drawing No:	C-301		

NOT FOR CONSTRUCTION

COPYRIGHT © 2022 by JMC All Rights Reserved. No part of this document may be reproduced, stored in a retrieval system, or transmitted in any form or by means, electronic, mechanical, photocopying, recording or otherwise, without the prior written permission of JMC PLANNING, ENGINEERING, LANDSCAPE ARCHITECTURE & LAND SURVEYING, PLLC | JMC SITE DEVELOPMENT CONSULTANTS, LLC | JOHN MEYER CONSULTING, INC. (JMC). Any modifications or alterations to this document without the written permission of JMC shall render them invalid and unusable.

MATCHLINE
MATCHLINE

LEGEND

- EXISTING PROPERTY LINE
- ADJACENT PROPERTY LINE
- EXISTING EASEMENT LINE
- WLF-G7 WLF-G4 WLF-G5 — EXISTING WETLAND LINE AND DELINEATION
- WETLAND BUFFER
- EXISTING BUILDING OVERHANG
- EXISTING BUILDING LINE
- EXISTING PAVEMENT EDGE/CURB LINE
- EXISTING STONE WALL
- EXISTING RETAINING WALL
- EXISTING FENCE
- 36" RCP — EXISTING STORM DRAIN LINE AND SIZE
- 8" SAN — EXISTING SANITARY LINE AND SIZE
- EXISTING WATER LINE
- EXISTING GAS LINE
- EXISTING OVERHEAD WIRES
- EXISTING DRAIN INLET
- EXISTING MANHOLE
- EXISTING FIRE HYDRANT
- EXISTING GAS VALVE
- EXISTING WATER VALVE
- EXISTING UTILITY POLE
- EXISTING LIGHT POLE
- EXISTING SIGN
- EXISTING BUILDING TO REMAIN
- PROPOSED BUILDING
- PROPOSED CONCRETE CURB
- PROPOSED CONCRETE SIDEWALK
- SMH — PROPOSED SANITARY SEWER MANHOLE
- DMH — PROPOSED STORM DRAIN MANHOLE
- CI — PROPOSED TYPE C DRAIN INLET
- DI — PROPOSED TYPE DI DRAIN INLET
- LIM — PROPOSED TYPE LI DRAIN LAWN INLET
- HW — PROPOSED HEADWALL
- WQS — PROPOSED WATER QUALITY STRUCTURE
- OCS — PROPOSED OUTLET CONTROL STRUCTURE
- CO — PROPOSED CLEANOUT
- PROPOSED HYDRANT
- 15" HDPE — PROPOSED STORM DRAIN LINE & SIZE
- 8" PVC — PROPOSED SANITARY SEWER LINE & SIZE
- PROPOSED WATER LINE
- PROPOSED WATER VALVE
- PROPOSED RETAINING WALL (DESIGN BY OTHERS)

NOTES:

1. EXISTING CONDITIONS DEPICTED ON THIS PLAN HAVE BEEN TAKEN FROM SURVEY TITLED, "PARCEL COMPILATION SURVEY DEPICTING LAND OF MBA INSURANCE CORP.," PREPARED BY JOHN MEYER CONSULTING, DATED 09/30/2005 AND SUPPLEMENTED WITH SURVEY TITLED, "TOPOGRAPHIC SURVEY," PREPARED BY JMC PLANNING, ENGINEERING, LANDSCAPE ARCHITECTURE & LAND SURVEYING, PLLC, DATED 02/10/2022.
2. ALL STORMWATER MANAGEMENT PRACTICES SHALL REMAIN UNDISTURBED AND BE PROTECTED FROM HEAVY MACHINERY TRAFFIC DURING CONSTRUCTION. HOWEVER DURING CONSTRUCTION OF THE PRACTICE THE CONTRACTOR SHALL MINIMIZE AND AVOID HEAVY MACHINERY TRAFFIC TO THE MAXIMUM EXTENT PRACTICABLE. THERE SHALL BE NO STORAGE OF MATERIALS WITHIN AREAS TO BE USED FOR STORMWATER MANAGEMENT PRACTICES. THE CONTRACTOR SHALL INSTALL CONSTRUCTION FENCE AROUND THE PRACTICE TO DISCOURAGE VEHICLE TRAFFIC.
3. UNLESS OTHERWISE SPECIFIED, PIPE FOR STORM DRAINS SHALL BE HIGH DENSITY POLYETHYLENE PIPE (HDPE) WITH A SMOOTH INTERIOR AND ANNULAR EXTERIOR CORRUGATIONS IN ACCORDANCE WITH ASTM F-2648. JOINTS SHALL BE WATERTIGHT IN ACCORDANCE WITH ASTM D-3212.
4. UNLESS OTHERWISE SPECIFIED, PIPE FOR SANITARY SEWER GRAVITY LINES SHALL BE POLYVINYL CHLORIDE PIPE (PVCP), SDR-35, WITH PUSH-ON JOINTS IN ACCORDANCE WITH ASTM D-3034 AND D-3212.
5. UNLESS OTHERWISE SPECIFIED, PIPE FOR WATER LINES SHALL BE DOUBLE CEMENT-LINED DUCTILE IRON PIPE (DIP), CLASS 56, WITH PUSH ON JOINTS IN ACCORDANCE WITH AWWA C-150, C-151, C-104 AND C-111.
6. ELECTRIC, TELEPHONE, FIRE ALARM AND CABLE TELEVISION LINES SHALL BE INSTALLED UNDERGROUND IN CONDUIT IN ACCORDANCE WITH THE REQUIREMENTS OF THE UTILITY COMPANY HAVING JURISDICTION.

APPLICANT/OWNER:

AIRPORT CAMPUS I-V LLC
45 WEST TUDOR AVENUE
POUND RIDGE, NY 10576

No.	Revision	Date	By
1.	REVISED FEIS	01/20/2023	BMS
2.	PLANNING BOARD SUBMISSION	10/06/2023	BMS
3.	PLANNING BOARD RESUBMISSION	11/10/2023	BMS
4.	PLANNING BOARD RESUBMISSION	12/21/2023	BMS

Previous Editions Obsolete

JMC Planning, Engineering, Landscape Architecture & Land Surveying, PLLC
JMC Site Development Consultants, LLC
John Meyer Consulting, Inc.
120 BEDFORD ROAD - ARMONK, NY 10504
voice 914.273.5225 • fax 914.273.2102
www.jmcpllc.com

UTILITIES PLAN

AIRPORT CAMPUS
113 KING STREET (NY ROUTE 120)
NORTH CASTLE, NY 10504

ANY ALTERATION OF PLANS, SPECIFICATIONS, PLATS AND REPORTS BEARING THE SEAL OF A LICENSED PROFESSIONAL ENGINEER OR LICENSED LAND SURVEYOR IS A VIOLATION OF SECTION 7209 OF THE NEW YORK STATE EDUCATION LAW, EXCEPT AS PROVIDED FOR BY SECTION 7209, SUBSECTION 2.

APPROVED BY TOWN OF NORTH CASTLE PLANNING BOARD RESOLUTION, DATED _____

_____ DATE: _____
CHRISTOPHER CARTHY, CHAIRMAN,
TOWN OF NORTH CASTLE PLANNING BOARD

ENGINEERING PLANS REVIEWED FOR CONFORMANCE TO RESOLUTION

_____ DATE: _____
JOSEPH M. CERMELE, PE
KSCJ CONSULTING
CONSULTING TOWN ENGINEERS

STATE OF NEW YORK • DAVID P. LOMBARDI • 071001 • LICENSED PROFESSIONAL ENGINEER

GRAPHIC SCALE
40 0 20 40 80 160
(IN FEET)
1 inch = 40 ft.

Drawn:	BMS Approved: AG
Scale:	1" = 40'
Date:	09/21/2022
Project No:	15072
15072-UTILITIES	C-302 UTIL.scr
Drawing No:	C-302

NOT FOR CONSTRUCTION

COPYRIGHT © 2023 by JMC All Rights Reserved. No part of this document may be reproduced, stored in a retrieval system, or transmitted, in any form or by means, electronic, mechanical, photocopying, recording or otherwise, without the prior written permission of JMC PLANNING, ENGINEERING, LANDSCAPE ARCHITECTURE & LAND SURVEYING, PLLC | JMC SITE DEVELOPMENT CONSULTANTS, LLC | JOHN MEYER CONSULTING, INC. (JMC). Any modifications or alterations to this document without the written permission of JMC shall render them invalid and unusable.

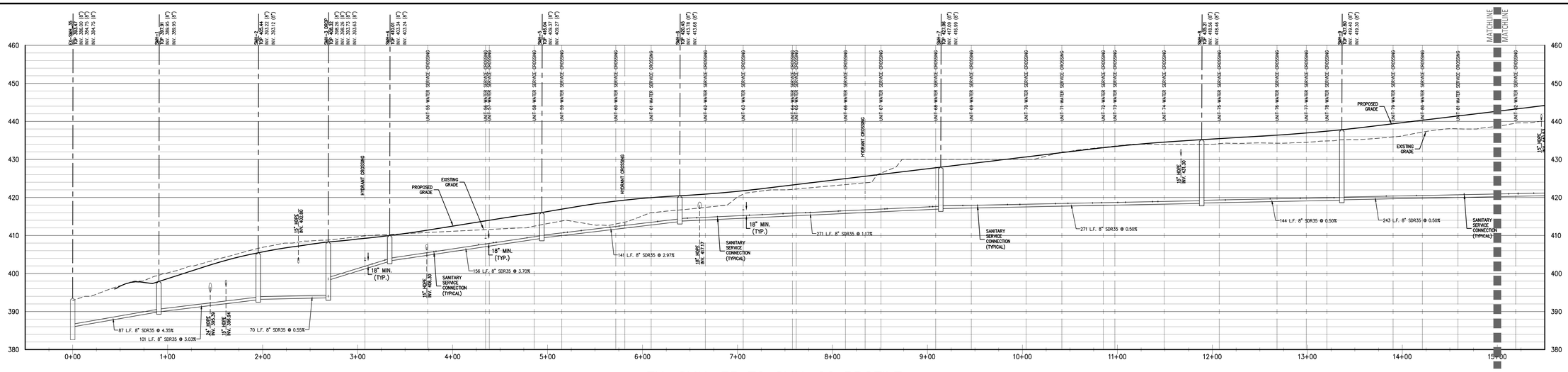

EX. SMH-35 TO SMH-20 PROFILE

HORIZONTAL SCALE 1"=40'
VERTICAL SCALE 1"=10'

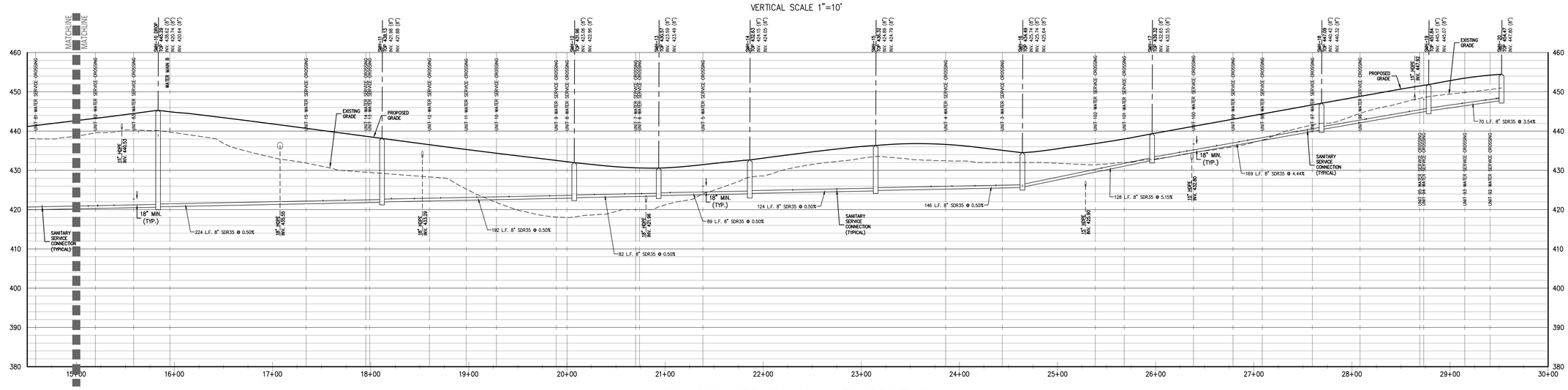

EX. SMH-35 TO SMH-20 PROFILE

HORIZONTAL SCALE 1"=40'
VERTICAL SCALE 1"=10'

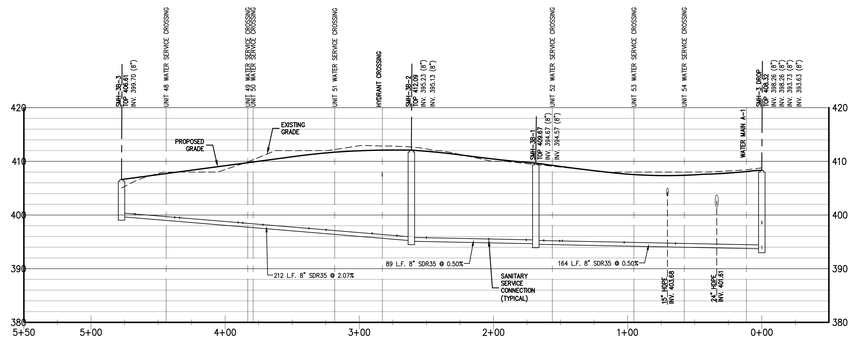

SMH-3-DROP TO SMH-3B-3 PROFILE

HORIZONTAL SCALE 1"=40'
VERTICAL SCALE 1"=10'

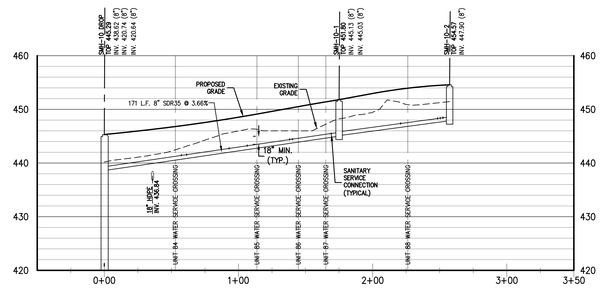

SMH-10-DROP TO SMH-10-2 PROFILE

HORIZONTAL SCALE 1"=40'
VERTICAL SCALE 1"=10'

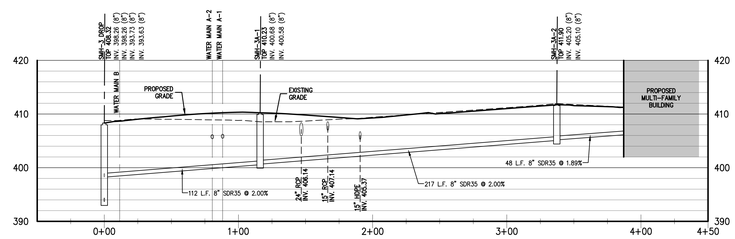

SMH-3-DROP TO PROPOSED MULTI-FAMILY BLDG PROFILE

HORIZONTAL SCALE 1"=40'
VERTICAL SCALE 1"=10'

APPROVED BY TOWN OF NORTH CASTLE PLANNING BOARD RESOLUTION, DATED _____

_____ DATE: _____
CHRISTOPHER CARTHY, CHAIRMAN,
TOWN OF NORTH CASTLE PLANNING BOARD

ENGINEERING PLANS REVIEWED FOR CONFORMANCE TO RESOLUTION

_____ DATE: _____
JOSEPH M. CERMELE, PE
KSCJ CONSULTING
CONSULTING TOWN ENGINEERS

No.	Revision	Date	By
1.	PLANNING BOARD SUBMISSION	10/06/2023	BMS
2.	PLANNING BOARD RESUBMISSION	11/10/2023	BMS
3.	PLANNING BOARD RESUBMISSION	12/21/2023	BMS

Previous Editions Obsolete

APPLICANT/OWNER:
AIRPORT CAMPUS I-V LLC
45 WESTCHESTER AVENUE
POUND RIDGE, NY 10576

JMC Planning, Engineering, Landscape Architecture & Land Surveying, PLLC
JMC Site Development Consultants, LLC
John Meyer Consulting, Inc.
120 BEDFORD ROAD • ARMONK, NY 10504
voice 914.273.5225 • fax 914.273.2102
www.jmcpllc.com

SANITARY SEWER PROFILES

AIRPORT CAMPUS
113 KING STREET (NY ROUTE 120)
NORTH CASTLE, NY 10504

ANY ALTERATION OF PLANS, SPECIFICATIONS, PLATS AND REPORTS BEARING THE SEAL OF A LICENSED PROFESSIONAL ENGINEER OR LICENSED LAND SURVEYOR IS A VIOLATION OF SECTION 7209 OF THE NEW YORK STATE EDUCATION LAW, EXCEPT AS PROVIDED FOR BY SECTION 7209, SUBSECTION 2.

STATE OF NEW YORK · JOSEPH M. CERMELE · 071001 · LICENSED PROFESSIONAL ENGINEER

Drawn:	BMS	Approved:	AG
Scale:	1" = 40'		
Date:	10/06/2023		
Project No:	15072		
15072-CTB.DWG	C-320	UTIL.scr	

Drawing No:
C-320

COPYRIGHT © 2023 by JMC. All rights reserved. No part of this document may be reproduced, stored in a retrieval system, or transmitted in any form or by means, electronic, mechanical, photocopying, recording or otherwise, without the prior written permission of JMC PLANNING, ENGINEERING, LANDSCAPE ARCHITECTURE & LAND SURVEYING, PLLC | JMC SITE DEVELOPMENT CONSULTANTS, LLC | JOHN MEYER CONSULTING, INC. (JMC). Any modifications or alterations to this document without the written permission of JMC shall render them invalid and unusable.

NOT FOR CONSTRUCTION

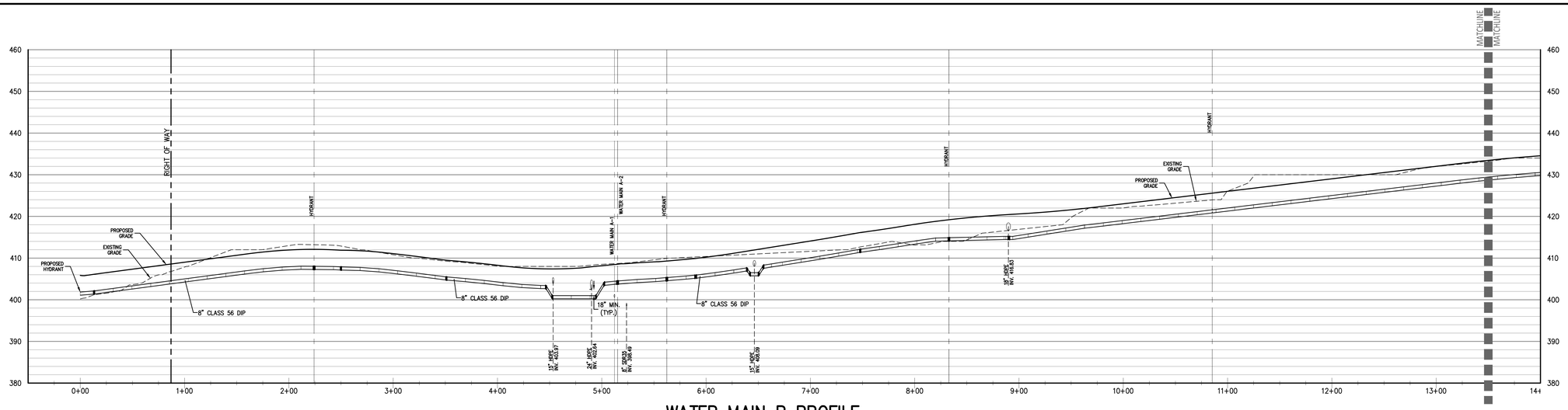

WATER MAIN B PROFILE

HORIZONTAL SCALE 1"=40'
VERTICAL SCALE 1"=10'

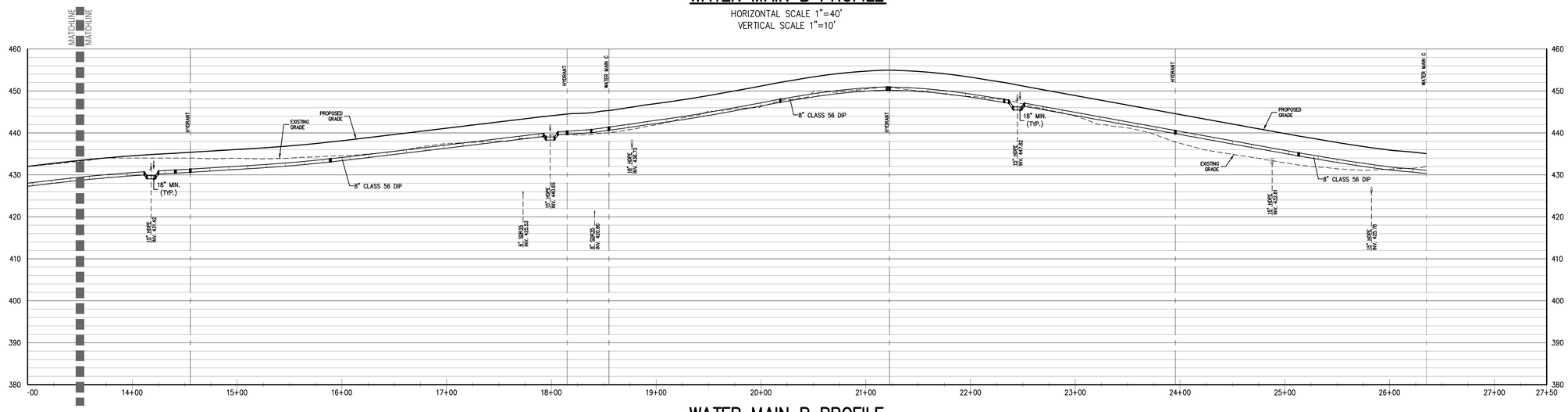

WATER MAIN B PROFILE

HORIZONTAL SCALE 1"=40'
VERTICAL SCALE 1"=10'

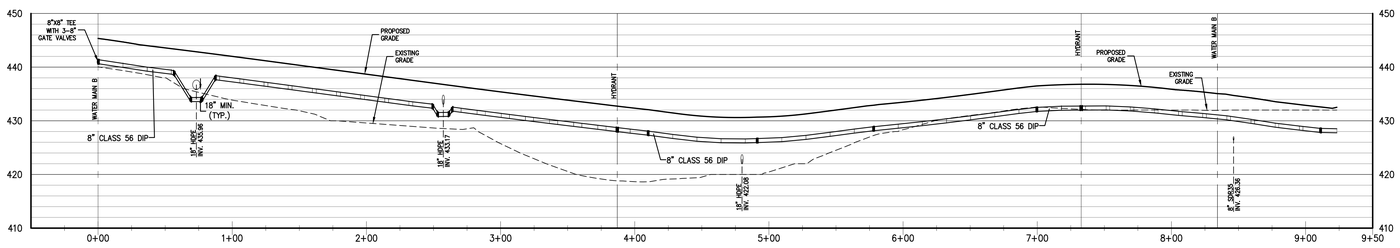

WATER MAIN C PROFILE

HORIZONTAL SCALE 1"=40'
VERTICAL SCALE 1"=10'

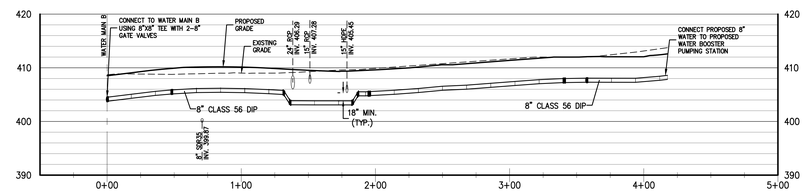

WATER MAIN A-2 PROFILE

HORIZONTAL SCALE 1"=40'
VERTICAL SCALE 1"=10'

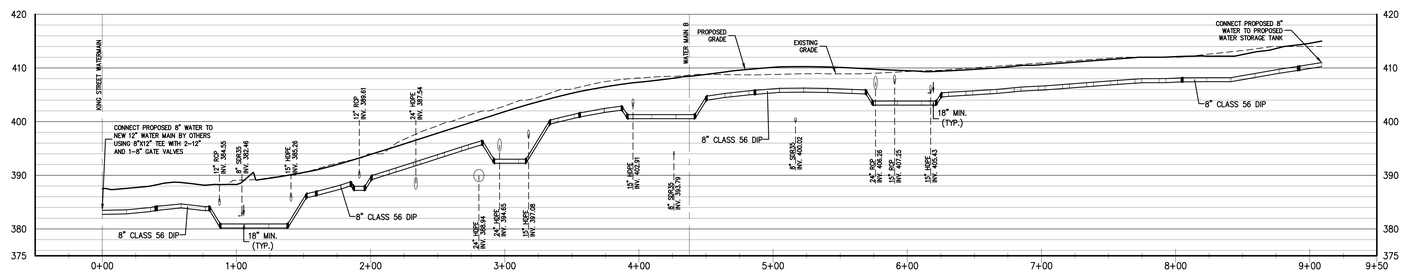

WATER MAIN A-1 PROFILE

HORIZONTAL SCALE 1"=40'
VERTICAL SCALE 1"=10'

No.	Revision	Date	By
1.	PLANNING BOARD SUBMISSION	10/06/2023	BMS
2.	PLANNING BOARD RESUBMISSION	11/10/2023	BMS
3.	PLANNING BOARD RESUBMISSION	12/21/2023	BMS

Previous Editions Obsolete

APPLICANT/OWNER:

AIRPORT CAMPUS I-V LLC
45 WESTCHESTER AVENUE
POUND RIDGE, NY 10576

JMC Planning, Engineering, Landscape Architecture & Land Surveying, PLLC
JMC Site Development Consultants, LLC
John Meyer Consulting, Inc.
120 BEDFORD ROAD - ARMONK, NY 10504
voice 914.273.5225 - fax 914.273.2102
www.jmcpllc.com

WATER MAIN PROFILES

AIRPORT CAMPUS
113 KING STREET (NY ROUTE 120)
NORTH CASTLE, NY 10504

ANY ALTERATION OF PLANS, SPECIFICATIONS, PLATS AND REPORTS BEARING THE SEAL OF A LICENSED PROFESSIONAL ENGINEER OR LICENSED LAND SURVEYOR IS A VIOLATION OF SECTION 7209 OF THE NEW YORK STATE EDUCATION LAW, EXCEPT AS PROVIDED FOR BY SECTION 7209, SUBSECTION 2.

APPROVED BY TOWN OF NORTH CASTLE PLANNING BOARD RESOLUTION, DATED _____

_____ DATE: _____
CHRISTOPHER CARTHY, CHAIRMAN,
TOWN OF NORTH CASTLE PLANNING BOARD

ENGINEERING PLANS REVIEWED FOR CONFORMANCE TO RESOLUTION

_____ DATE: _____
JOSEPH M. CERMELE, PE
KSCJ CONSULTING
CONSULTING TOWN ENGINEERS

STATE OF NEW YORK
JOSEPH M. CERMELE
071107
LICENSED PROFESSIONAL ENGINEER

Drawn:	BMS	Approved:	AG
Scale:	1" = 40'		
Date:	10/06/2023		
Project No:	15072		
ISED-UTILITIES	C-330	UTIL.scr	

Drawing No:
C-330

NOT FOR CONSTRUCTION

COPYRIGHT © 2023 by JMC - all rights reserved. No part of this document may be reproduced, stored in a retrieval system, or transmitted, in any form or by means, electronic, mechanical, photocopying, recording or otherwise, without the prior written permission of JMC PLANNING, ENGINEERING, LANDSCAPE ARCHITECTURE & LAND SURVEYING, PLLC, JMC SITE DEVELOPMENT CONSULTANTS, LLC, JOHN MEYER CONSULTING, INC. (JMC). Any modifications or alterations to this document without the written permission of JMC shall render them invalid and unusable.

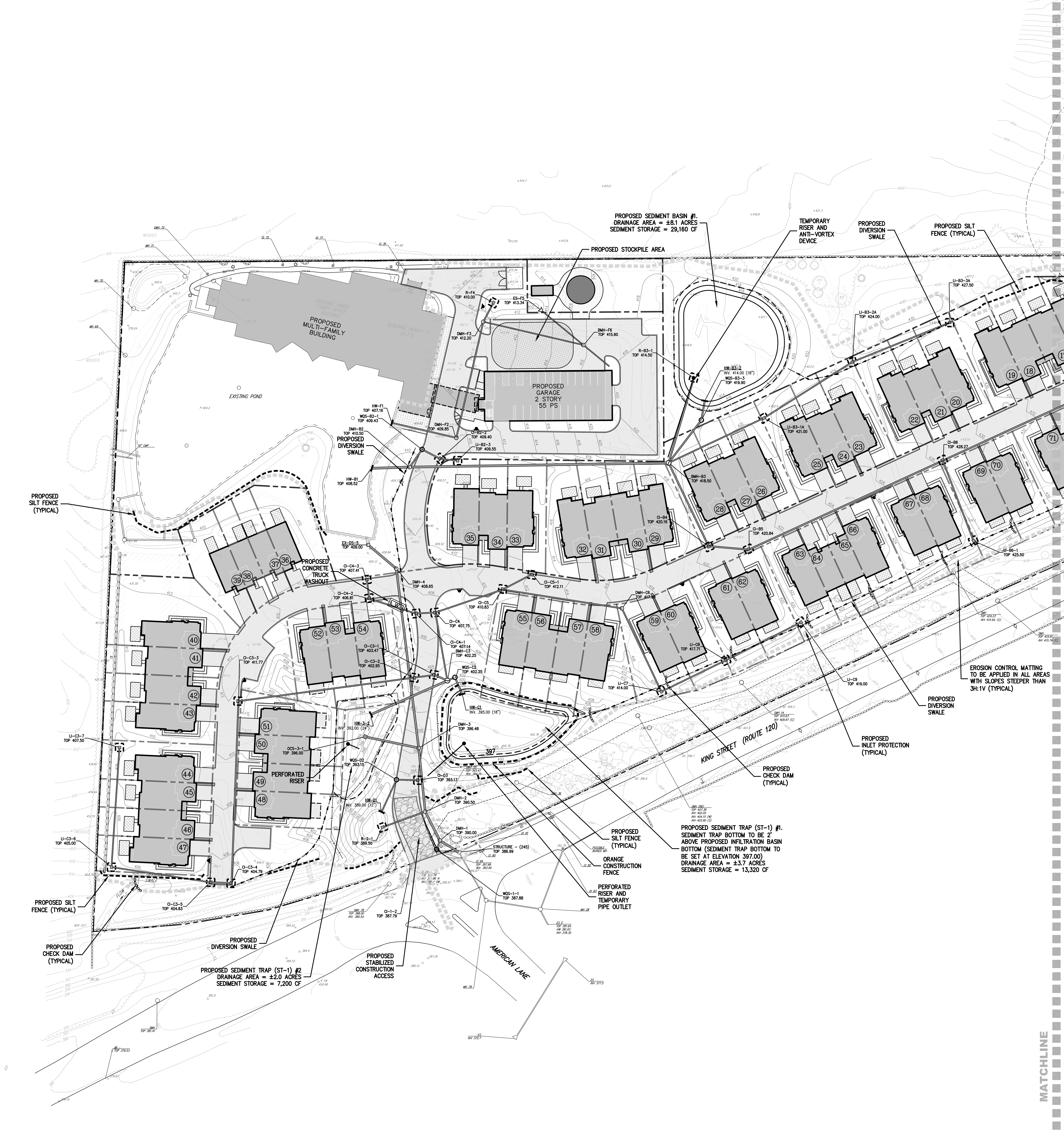

TABLE OF SOIL RESTORATION REQUIREMENTS

TYPE OF SOIL DISTURBANCE	SOIL RESTORATION REQUIREMENTS		COMMENTS/EXAMPLES
NO SOIL DISTURBANCE	RESTORATION NOT PERMITTED		PRESERVATION OF NATURAL FEATURES
MINIMAL SOIL DISTURBANCE	RESTORATION NOT REQUIRED		CLEARING AND GRUBBING
AREAS WHERE TOPSOIL IS STRIPPED ONLY (NO CHANGE IN GRADE)	HSG A&B: APPLY 6 INCHES OF TOPSOIL	HSG C&D: AERATE AND APPLY 6 INCHES OF TOPSOIL	PROTECT AREA FROM ANY ONGOING CONSTRUCTION ACTIVITIES
AREAS OF CUT OR FILL	HSG A&B: AERATE AND APPLY 6 INCHES OF TOPSOIL	HSG C&D: APPLY FULL SOIL RESTORATION	CLEARING AND GRUBBING
HEAVY TRAFFIC AREAS ON SITE (ESPECIALLY IN A ZONE 5 TO 25 FEET AROUND BUILDINGS BUT NOT WITHIN A 5 FOOT PERIMETER AROUND FOUNDATION WALLS)	APPLY FULL SOIL RESTORATION (DECOMPACTION AND COMPOST ENHANCEMENT)		
AREAS WHERE RUNOFF REDUCTION AND/OR INFILTRATION PRACTICES ARE APPLIED	RESTORATION NOT REQUIRED, BUT MAY BE APPLIED TO ENHANCE THE REDUCTION SPECIFIED FOR APPROPRIATE PRACTICES		KEEP CONSTRUCTION EQUIPMENT FROM CROSSING THESE AREAS (TO PROTECT NEWLY INSTALLED PRACTICE FROM ANY ONGOING CONSTRUCTION ACTIVITIES CONSTRUCT A SINGLE PHASE OPERATION FENCE AREA)
REDEVELOPMENT PROJECTS	SOIL RESTORATION IS REQUIRED ON REDEVELOPMENT PROJECTS IN AREAS WHERE EXISTING IMPERVIOUS AREAS WILL BE COVERED TO PERVIOUS AREA		

TABLE OF SOIL RESTORATION REQUIREMENTS NOTES:

1. AERATION INCLUDES THE USE OF MACHINES SUCH AS TRACTOR-DRAWN IMPLEMENTS WITH COULTER MAKING A NARROW SLIT IN THE SOIL, A ROLLER WITH MANY SPIKES MAKING INDENTATIONS IN THE SOIL, OR PRONGS WHICH FUNCTION LIKE A MINI-SUBSOILER.
2. PER "DEEP RIPPING AND DE-COMPACTION, NYSDEC 2008."

LEGEND

- PROPOSED INLET PROTECTION
- PROPOSED CONSTRUCTION FENCE
- PROPOSED SILT FENCE
- PROPOSED STONE CHECK DAM
- PROPOSED LIMIT OF DISTURBANCE
- PROPOSED STABILIZED CONSTRUCTION ACCESS
- PROPOSED STOCKPILE AREA
- PROPOSED TEMPORARY SWALE
- PROPOSED TEMPORARY SEDIMENT BASIN/TRAP
- TEMPORARY RISER & ANTI-VORTEX DEVICE
- W — CONCRETE TRUCK WASHOUT

NOTES:

1. EXISTING CONDITIONS DEPICTED ON THIS PLAN HAVE BEEN TAKEN FROM SURVEY TITLED, "PARCEL COMPILATION SURVEY DEPICTING LAND OF MBIA INSURANCE CORP.," PREPARED BY JOHN MEYER CONSULTING, LAST REVISED 09/30/2005.
2. THE LIMIT OF DISTURBANCE SHALL BE STAKED IN THE FIELD PRIOR TO CONSTRUCTION.
3. THIS PLAN IS FOR TEMPORARY EROSION AND SEDIMENT CONTROL INFORMATION ONLY.
4. PRIOR TO BEGINNING ANY CLEARING, GRUBBING OR EXCAVATION, ALL EROSION AND SEDIMENT CONTROL MEASURES SHALL BE INSTALLED IN ACCORDANCE WITH ALL THE PLANS AND SPECIFICATIONS. EROSION AND SEDIMENT CONTROL MEASURES SHALL BE MAINTAINED UNTIL THE SITE IS STABILIZED. FINAL STABILIZATION OF LANDSCAPED AREAS SHALL BE IN ACCORDANCE WITH THE LANDSCAPE PLAN.
5. THE CONTRACTOR SHALL INSPECT AND MAINTAIN ON-SITE EROSION AND SEDIMENT CONTROL MEASURES ON A DAILY BASIS. ALL COLLECTED SEDIMENT WITHIN SEDIMENT BARRIERS SHALL BE REMOVED PERIODICALLY AS REQUIRED TO MAINTAIN THE FUNCTION OF THE SEDIMENT BARRIERS. ALL SEDIMENT COLLECTED SHALL BE RESPREAD ON-SITE WITHIN STABILIZED AREAS AS DIRECTED BY THE OWNERS REPRESENTATIVE.
6. THE CONTRACTOR SHALL INSPECT DOWNSTREAM CONDITIONS FOR EVIDENCE OF SEDIMENTATION ON A WEEKLY BASIS, AFTER EACH RAINSTORM, AND AS MAY BE REQUIRED OR DIRECTED BY ALL APPLICABLE APPROVALS AND PERMITS. THE CONTRACTOR SHALL IMMEDIATELY PROVIDE A WRITTEN REPORT ON FINDINGS OF SEDIMENT IN DOWNSTREAM AREAS TO ALL AUTHORITIES HAVING JURISDICTION AND MAKE REPAIRS AS REQUIRED OR DIRECTED.
7. ADDITIONAL EROSION AND SEDIMENT CONTROL MEASURES SHALL BE INSTALLED BY THE CONTRACTOR AS REQUIRED/WARRANTED BY FIELD CONDITIONS AND AS DIRECTED BY THE OWNERS REPRESENTATIVE, JMC, AND/OR ANY AUTHORITY HAVING JURISDICTION.
8. STOCKPILING OF CONSTRUCTION MATERIAL SHALL BE PLACED ON-SITE IN THE AREA DESIGNATED ON THIS PLAN OR AS APPROVED BY THE OWNERS REPRESENTATIVE. STOCKPILED EXCAVATED MATERIAL SHALL HAVE TWO ROWS OF SILT FENCE LOCATED AROUND ITS PERIMETER. ALL STOCKPILED MATERIAL SHALL BE MAINTAINED IN AN ORDERLY MANNER SO AS NOT TO IMPEDE ON PEDESTRIAN AND/OR VEHICULAR TRAFFIC CIRCULATION ROUTES.
7. DUST SHALL BE CONTROLLED BY SPRINKLING OR OTHER APPROVED METHODS AS NECESSARY, OR AS DIRECTED BY THE OWNERS REPRESENTATIVE.
8. ALL STORMWATER MANAGEMENT PRACTICES SHALL REMAIN UNDISTURBED AND BE PROTECTED FROM HEAVY MACHINERY TRAFFIC DURING CONSTRUCTION. HOWEVER DURING CONSTRUCTION OF THE PRACTICE THE CONTRACTOR SHALL MINIMIZE AND AVOID HEAVY MACHINERY TRAFFIC TO THE MAXIMUM EXTENT PRACTICABLE. THERE SHALL BE NO STORAGE OF MATERIALS WITHIN AREAS TO BE USED FOR STORMWATER MANAGEMENT PRACTICES. THE CONTRACTOR SHALL INSTALL CONSTRUCTION FENCE AROUND THE PRACTICE TO DISCOURAGE VEHICLE TRAFFIC.
9. ALL EXPOSED SLOPES AND GRADED/DISTURBED AREAS, THAT WILL NOT BE FURTHER DISTURBED WITHIN 7 CALENDAR DAYS, SHALL BE TEMPORARILY SEEDED WITHIN 24 HOURS OF DISTURBANCE, IN ACCORDANCE WITH THE NEW YORK STATE DEPARTMENT OF ENVIRONMENTAL CONSERVATION (NYSDEC) "EROSION AND SEDIMENT CONTROL GUIDELINES" AND THE ANSI A300 "BEST MANAGEMENT PRACTICES FOR TREE AND SHRUB PLANTING, TRANSPLANTING, MAINTENANCE AND CARE," PREPARED BY THE INTERNATIONAL SOCIETY OF ARBORICULTURE (ISA), LATEST EDITIONS, AS FOLLOWS:
   - A. SEED MIXTURE AND RATE OF APPLICATION:
     - A.1. IN SPRING, SUMMER OR EARLY FALL, SEED THE AREA WITH RYEGRASS (ANNUAL OR PERENNIAL) AT 30 POUNDS PER ACRES (APPROXIMATELY 0.7 POUNDS/1000 SQUARE FEET OR USE 1 POUND/1000 SQUARE FEET).
     - A.2. IN LATE FALL OR EARLY WINTER, SEED THE AREA WITH CERTIFIED 'AROOSTOOK' WINTER RYE (CEREAL RYE) AT 100 POUNDS PER ACRE (2.5 POUNDS/1000 SQUARE FEET).
   - B. APPLICATION SHALL BE UNIFORM BY MECHANICAL OR HYDROSEED METHODS.
   - C. MULCH ALL SEEDED AREAS WITH STRAW AT A RATE OF 2 TONS PER ACRE (90 POUNDS PER 1,000 SQUARE FEET) SUCH THAT THE MULCH FORMS A CONTINUOUS BLANKET.
10. ALL EXPOSED SLOPES AND GRADED/DISTURBED AREAS, THAT WILL NOT BE FURTHER DISTURBED WITHIN 30 CALENDAR DAYS BUT LESS THEN 1 YEAR, SHALL BE TEMPORARILY SEEDED WITHIN 7 DAYS AFTER SUSPENSION OF GRADING, IN ACCORDANCE WITH THE CONNECTICUT DEPARTMENT OF ENVIRONMENTAL PROTECTION (CTDEP) "CONNECTICUT GUIDELINES FOR SOIL EROSION AND SEDIMENT CONTROL" AND THE ANSI A300 "BEST MANAGEMENT PRACTICES FOR TREE AND SHRUB PLANTING, TRANSPLANTING, MAINTENANCE AND CARE," PREPARED BY THE INTERNATIONAL SOCIETY OF ARBORICULTURE (ISA), LATEST EDITIONS, AS FOLLOWS:
    - A. FOR SEED MIXTURE AND RATE OF APPLICATION CONTRACTOR SHALL REFER TO FIGURE TS-2 IN THE CONNECTICUT GUIDELINES FOR SOIL EROSION AND SEDIMENT CONTROL.
    - B. APPLICATION SHALL BE UNIFORM BY MECHANICAL OR HYDROSEED METHODS. SEEDING RATES SHALL BE INCREASED BY 10% WHEN HYDROSEEDING.
    - C. MULCH ALL SEEDED AREAS WITH STRAW AT A RATE OF 2 TONS PER ACRE (90 POUNDS PER 1,000 SQUARE FEET) SUCH THAT THE MULCH FORMS A CONTINUOUS BLANKET.
11. ALL EXPOSED SLOPES AND GRADED/DISTURBED AREAS, THAT WILL NOT BE FURTHER DISTURBED WITHIN A PERIOD OF 2-6 MONTHS OR NOT SCHEDULED FOR PERMANENT SEED WITHIN 60 CALENDAR DAYS, SHALL BE TEMPORARILY SEEDED WITHIN 24 HOURS OF DISTURBANCE, IN ACCORDANCE WITH THE NEW JERSEY STATE DEPARTMENT OF AGRICULTURE – STATE SOIL CONSERVATION COMMITTEE PUBLICATION "THE STANDARDS FOR SOIL EROSION AND SEDIMENT CONTROL IN NEW JERSEY" AND THE ANSI A300 "BEST MANAGEMENT PRACTICES FOR TREE AND SHRUB PLANTING, TRANSPLANTING, MAINTENANCE AND CARE," PREPARED BY THE INTERNATIONAL SOCIETY OF ARBORICULTURE (ISA), LATEST EDITIONS, AS FOLLOWS:
    - A. FOR SEED MIXTURE AND RATE OF APPLICATION CONTRACTOR SHALL REFER TO TABLE 7-2 "TEMPORARY VEGETATIVE STABILIZATION GRASSES, SEEDING RATES, DATES AND DEPTH."
    - B. APPLICATION SHALL BE UNIFORM BY MECHANICAL OR HYDROSEED METHODS.
    - C. MULCH ALL SEEDED AREAS WITH STRAW AT A RATE OF 2 TONS PER ACRE (90 POUNDS PER 1,000 SQUARE FEET) SUCH THAT THE MULCH FORMS A CONTINUOUS BLANKET.
12. ALL SEEDED AREAS SHALL BE FERTILIZED, RESEEDED, AND MULCHED AS NECESSARY TO MAINTAIN VIGOROUS, DENSE VEGETATIVE COVER.
13. TEMPORARY SEED MIXTURES SHALL NOT BE PLACED ON AREAS WHERE FINAL GRADE HAS BEEN ESTABLISHED AND TOPSOIL HAS BEEN PLACED UNLESS OTHERWISE DIRECTED BY THE PROJECT LANDSCAPE ARCHITECT.
14. VEGETATIVE WASTE TO BE CHIPPED AND REMOVED OFF-SITE OR SPREAD ON-SITE AS AN INTERIM STABILIZATION METHOD.

PHASE 1 – SEQUENCE OF CONSTRUCTION

CONSTRUCTION SHALL BE SEQUENCED IN SUCH A MANNER THAT ANY AREA WHICH IS DISTURBED SHALL FIRST BE PROTECTED WITH SEDIMENT EROSION CONTROLS AS INDICATED ON THIS PLAN. THE SEQUENCE OF CONSTRUCTION IS AS FOLLOWS:

1. PRE-CONSTRUCTION MEETING SHALL BE HELD WITH REPRESENTATIVES OF THE TOWN OF NORTH CASTLE AND NYCDEP.
2. ESTABLISH STABILIZED CONSTRUCTION ACCESS AND STAGING AREAS.
3. STAKE OUT LIMITS OF THE PROPOSED STORMWATER INFILTRATION BASINS WITH ORANGE CONSTRUCTION FENCE.
4. INSTALL SILT FENCE, INLET PROTECTION AND TREE PROTECTION FENCE AS SHOWN ON PLANS.
5. DEMOLISH NORTHERN OFFICE BUILDING, BUILDING CONNECTION BRIDGE, PARKING GARAGE AND HOUSE TO FOUNDATIONS.
6. CLEAR AND GRUB FOR TEMPORARY SEDIMENT TRAPS AND SEDIMENT BASINS. STRIP AND STOCKPILE SOIL. STOCKPILE WHERE INDICATED ON PLANS AND COVER WITH SEED AND MULCH.
7. BEGIN EXCAVATION OF TEMPORARY SEDIMENT TRAPS AND SEDIMENT DETENTION BASINS.
8. INSTALL OUTLET CONTROL STRUCTURES, TEMPORARY RISERS AND ANTI-VORTEX DEVICES, PERFORATED RISERS AND EMERGENCY SPILLWAYS.
9. ESTABLISH TEMPORARY DIVERSION DITCHES PRIOR TO ANY OTHER CLEARING OR GRADING.
10. CLEAR AREAS TO BE DEVELOPED. STRIP TOPSOIL. STOCKPILE WHERE INDICATED ON PLAN AND COVER WITH SEED AND MULCH.
11. ROUGH GRADE THE SITE AND ESTABLISH SWALES WITH CHECK DAMS.
12. BEGIN BUILDING OF PARKING GARAGE AND 21 TOWNHOUSE BUILDINGS (68 UNITS), CLUBHOUSE AND POOL, AND ROADWAY CONSTRUCTION.
13. INSTALL STORM STRUCTURES AND ASSOCIATED STORM SYSTEM PIPING COMPLETE. IMMEDIATELY INSTALL INLET PROTECTION. INSTALL PUG IN BMH-C3.
14. INSTALL REMINING UTILITIES.
15. INSTALL CURBING AND WALKWAYS.
16. INSTALL PAVEMENT SUBBASE AND BINDER COURSE.
17. REDISTRIBUTE TOPSOIL, INSTALL LANDSCAPING, STABILIZED TURF AND PERMANENT GROUND COVERS.
18. THE CONTRIBUTING DRAINAGE AREA SHALL BE COMPLETELY STABILIZED PRIOR TO REMOVING THE EROSION CONTROL DEVICES AND CONVERTING THE TEMPORARY SEDIMENT TRAPS AND BASINS TO PERMANENT STORMWATER MANAGEMENT PRACTICES.
19. CLEAN PAVEMENT AND STORM SYSTEM OF ALL ACCUMULATED SEDIMENT IN CONJUNCTION WITH THE REMOVAL OF ALL TEMPORARY EROSION AND SEDIMENT AND CONTROLS.
20. INSTALL PAVEMENT TOP COURSE
21. COMPLETE GRADING AND LANDSCAPING FOR THE PERMANENT STORMWATER MANAGEMENT PRACTICES.
22. REMOVE PLUG FROM BMH-C3.

PHASE 2 – SEQUENCE OF CONSTRUCTION

CONSTRUCTION SHALL BE SEQUENCED IN SUCH A MANNER THAT ANY AREA WHICH IS DISTURBED SHALL FIRST BE PROTECTED WITH SEDIMENT EROSION CONTROLS AS INDICATED ON THIS PLAN. THE SEQUENCE OF CONSTRUCTION IS AS FOLLOWS:

1. PRE-CONSTRUCTION MEETING SHALL BE HELD WITH REPRESENTATIVES OF THE TOWN OF NORTH CASTLE AND NYCDEP.
2. ESTABLISH STABILIZED CONSTRUCTION ACCESS AND STAGING AREAS.
3. STAKE OUT LIMITS OF THE PROPOSED STORMWATER INFILTRATION AREAS WITH ORANGE CONSTRUCTION FENCE.
4. INSTALL SILT FENCE, INLET PROTECTION AND TREE PROTECTION FENCE AS SHOWN ON PLANS.
5. CLEAR AND GRUB FOR SEDIMENT TRAPS. STRIP AND STOCKPILE SOIL. STOCKPILE WHERE INDICATED ON PLANS AND COVER WITH SEED AND MULCH.
6. EXCAVATE FOR TEMPORARY SEDIMENT TRAPS.
7. ESTABLISH TEMPORARY DIVERSION DITCHES PRIOR TO ANY OTHER CLEARING OR GRADING.
8. CLEAR AREAS TO BE DEVELOPED. STRIP TOPSOIL. STOCKPILE WHERE INDICATED ON PLANS AND COVER WITH SEED AND MULCH.
9. ROUGH GRADE THE SITE AND ESTABLISH SWALES WITH CHECK DAMS.
10. BEGIN BUILDING OF 20 TOWNHOUSE BUILDINGS (57 UNITS) AND ROAD CONSTRUCTION. SEED AND MULCH ALL DISTURBED SLOPES.
11. INSTALL STORM DRAINAGE SYSTEM. IMMEDIATELY INSTALL INLET PROTECTION. INSTALL PLUG IN BMH-A4.
12. INSTALL REMAINING UTILITIES.
13. INSTALL CURBING AND WALKWAYS.
14. INSTALL PAVEMENT SUBBASE AND BINDER COURSE FOR ROADS.
15. REDISTRIBUTE TOPSOIL, INSTALL LANDSCAPING, STABILIZED TURF AND PERMANENT GROUND COVERS.
16. THE CONTRIBUTING DRAINAGE AREA SHALL BE COMPLETELY STABILIZED PRIOR TO REMOVING THE EROSION CONTROL DEVICES AND CONVERTING THE TEMPORARY SEDIMENT BASIN TO A PERMANENT DETENTION BASIN.
17. CLEAN PAVEMENT AND STORM SYSTEM OF ALL ACCUMULATED SEDIMENT IN CONJUNCTION WITH THE REMOVAL OF ALL TEMPORARY EROSION AND SEDIMENT AND CONTROLS.
18. INSTALL PAVEMENT TOP COURSE.
19. COMPLETE GRADING AND LANDSCAPING FOR THE PERMANENT STORMWATER MANAGEMENT PRACTICES.
20. REMOVE PLUG FROM BMH-A4

APPROVED BY TOWN OF NORTH CASTLE PLANNING BOARD RESOLUTION, DATED ______

______ DATE: ______
CHRISTOPHER CARTHY, CHAIRMAN,
TOWN OF NORTH CASTLE PLANNING BOARD

ENGINEERING PLANS REVIEWED FOR CONFORMANCE TO RESOLUTION

______ DATE: ______
JOSEPH M. CERMELE, PE
KSCJ CONSULTING
CONSULTING TOWN ENGINEERS

GRAPHIC SCALE
40 0 20 40 80 160
(IN FEET)
1 inch = 40 ft.

No.	Revision	Date	By
1.	REVISED FEIS	01/20/2023	BMS
2.	PLANNING BOARD SUBMISSION	10/06/2023	BMS
3.	TOWN CONSERVATION BOARD SUBMISSION	10/31/2023	BMS
4.	PLANNING BOARD RESUBMISSION	11/10/2023	BMS
5.	PLANNING BOARD RESUBMISSION	12/21/2023	BMS

Previous Editions Obsolete

APPLICANT/OWNER:
AIRPORT CAMPUS I-V LLC
46 WESTCHESTER AVENUE
POUND RIDGE, NY 10576

JMC Planning, Engineering, Landscape Architecture & Land Surveying, PLLC
JMC Site Development Consultants, LLC
John Meyer Consulting, Inc.
120 BEDFORD ROAD • ARMONK, NY 10504
voice 914.273.5225 • fax 914.273.2102
www.jmcpllc.com

EROSION AND SEDIMENT CONTROL PLAN

AIRPORT CAMPUS
113 KING STREET (NY ROUTE 120)
NORTH CASTLE, NY 10504

ANY ALTERATION OF PLANS, SPECIFICATIONS, PLATS AND REPORTS BEARING THE SEAL OF A LICENSED PROFESSIONAL ENGINEER OR LICENSED LAND SURVEYOR IS A VIOLATION OF SECTION 7209 OF THE NEW YORK STATE EDUCATION LAW, EXCEPT AS PROVIDED FOR BY SECTION 7209, SUBSECTION 2.

STATE OF NEW YORK · DAVID P. LOMBARDI · 071001 · LICENSED PROFESSIONAL ENGINEER

Drawn: BMS	Approved: AG		
Scale: 1" = 40'			
Date: 09/21/2022			
Project No: 15072			
15072-E&S	C-401	SE.scr	
Drawing No: C-401			

COPYRIGHT © 2023 by JMC. All Rights Reserved. No part of this document may be reproduced, stored in a retrieval system, or transmitted in any form or by means, electronic, mechanical, photocopying, recording or otherwise, without the prior written permission of JMC PLANNING, ENGINEERING, LANDSCAPE ARCHITECTURE & LAND SURVEYING, PLLC | JMC SITE DEVELOPMENT CONSULTANTS, LLC | JOHN MEYER CONSULTING, INC. (JMC). Any modifications or alterations to this document without the written permission of JMC shall render them invalid and unusable.
NOT FOR CONSTRUCTION

TABLE OF SOIL RESTORATION REQUIREMENTS

TYPE OF SOIL DISTURBANCE	SOIL RESTORATION REQUIREMENTS		COMMENTS/EXAMPLES
NO SOIL DISTURBANCE	RESTORATION NOT PERMITTED		PRESERVATION OF NATURAL FEATURES
MINIMAL SOIL DISTURBANCE	RESTORATION NOT REQUIRED		CLEARING AND GRUBBING
AREAS WHERE TOPSOIL IS STRIPPED ONLY (NO CHANGE IN GRADE)	HSG A&B: APPLY 6 INCHES OF TOPSOIL	HSG C&D: AERATE AND APPLY 6 INCHES OF TOPSOIL	PROTECT AREA FROM ANY ONGOING CONSTRUCTION ACTIVITIES
AREAS OF CUT OR FILL	HSG A&B: AERATE AND APPLY 6 INCHES OF TOPSOIL	HSG C&D: APPLY FULL SOIL RESTORATION	CLEARING AND GRUBBING
HEAVY TRAFFIC AREAS ON SITE (ESPECIALLY IN A ZONE 5 TO 25 FEET AROUND BUILDINGS BUT NOT WITHIN A 5 FOOT PERIMETER AROUND FOUNDATION WALLS)	APPLY FULL SOIL RESTORATION (DECOMPACTION AND COMPOST ENHANCEMENT)		
AREAS WHERE RUNNOFF REDUCTION AND/OR INFILTRATION PRACTICES ARE APPLIED	RESTORATION NOT REQUIRED, BUT MAY BE APPLIED TO ENHANCE THE REDUCTION SPECIFIED FOR APPROPRIATE PRACTICES		KEEP CONSTRUCTION EQUIPMENT FROM CROSSING THESE AREAS (TO PROTECT NEWLY INSTALLED PRACTICE FROM ANY ONGOING CONSTRUCTION ACTIVITIES CONSTRUCT A SINGLE PHASE OPERATION FENCE AREA)
REDEVELOPMENT PROJECTS	SOIL RESTORATION IS REQUIRED ON REDEVELOPMENT PROJECTS IN AREAS WHERE EXISTING IMPERVIOUS AREAS WILL BE COVERED TO PERVIOUS AREA		

TABLE OF SOIL RESTORATION REQUIREMENTS NOTES:

1. AERATION INCLUDES THE USE OF MACHINES SUCH AS TRACTOR-DRAWN IMPLEMENTS WITH COULTER MAKING A NARROW SLIT IN THE SOIL, A ROLLER WITH MANY SPIKES MAKING INDENTATIONS IN THE SOIL, OR PRONGS WHICH FUNCTION LIKE A MINI-SUBSOILER.
2. PER "DEEP RIPPING AND DE-COMPACTION, NYSDEC 2008."

LEGEND

- PROPOSED INLET PROTECTION
- PROPOSED CONSTRUCTION FENCE
- PROPOSED SILT FENCE
- PROPOSED STONE CHECK DAM
- PROPOSED LIMIT OF DISTURBANCE
- PROPOSED STABILIZED CONSTRUCTION ACCESS
- PROPOSED STOCKPILE AREA
- PROPOSED TEMPORARY SWALE
- PROPOSED TEMPORARY SEDIMENT BASIN/TRAP
- TEMPORARY RISER & ANTI-VORTEX DEVICE
- W — CONCRETE TRUCK WASHOUT

NOTES:

1. EXISTING CONDITIONS DEPICTED ON THIS PLAN HAVE BEEN TAKEN FROM SURVEY TITLED, "PARCEL COMPILATION SURVEY DEPICTING LAND OF MBIA INSURANCE CORP.," PREPARED BY JOHN MEYER CONSULTING, LAST REVISED 09/30/2005.
2. THE LIMIT OF DISTURBANCE SHALL BE STAKED IN THE FIELD PRIOR TO CONSTRUCTION.
3. THIS PLAN IS FOR TEMPORARY EROSION AND SEDIMENT CONTROL INFORMATION ONLY.
4. PRIOR TO BEGINNING ANY CLEARING, GRUBBING OR EXCAVATION, ALL EROSION AND SEDIMENT CONTROL MEASURES SHALL BE INSTALLED IN ACCORDANCE WITH ALL THE PLANS AND SPECIFICATIONS. EROSION AND SEDIMENT CONTROL MEASURES SHALL BE MAINTAINED UNTIL THE SITE IS STABILIZED. FINAL STABILIZATION OF LANDSCAPED AREAS SHALL BE IN ACCORDANCE WITH THE LANDSCAPE PLAN.
5. THE CONTRACTOR SHALL INSPECT AND MAINTAIN ON-SITE EROSION AND SEDIMENT CONTROL MEASURES ON A DAILY BASIS. ALL COLLECTED SEDIMENT WITHIN SEDIMENT BARRIERS SHALL BE REMOVED PERIODICALLY AS REQUIRED TO MAINTAIN THE FUNCTION OF THE SEDIMENT BARRIERS. ALL SEDIMENT COLLECTED SHALL BE RESPREAD ON-SITE WITHIN STABILIZED AREAS AS DIRECTED BY THE OWNERS REPRESENTATIVE.
6. THE CONTRACTOR SHALL INSPECT DOWNSTREAM CONDITIONS FOR EVIDENCE OF SEDIMENTATION ON A WEEKLY BASIS, AFTER EACH RAINSTORM, AND AS MAY BE REQUIRED OR DIRECTED BY ALL APPLICABLE APPROVALS AND PERMITS. THE CONTRACTOR SHALL IMMEDIATELY PROVIDE A WRITTEN REPORT ON FINDINGS OF SEDIMENT IN DOWNSTREAM AREAS TO ALL AUTHORITIES HAVING JURISDICTION AND MAKE REPAIRS AS REQUIRED OR DIRECTED.
7. ADDITIONAL EROSION AND SEDIMENT CONTROL MEASURES SHALL BE INSTALLED BY THE CONTRACTOR AS REQUIRED/WARRANTED BY FIELD CONDITIONS AND AS DIRECTED BY THE OWNERS REPRESENTATIVE, JMC, AND/OR ANY AUTHORITY HAVING JURISDICTION.
8. STOCKPILING OF CONSTRUCTION MATERIAL SHALL BE PLACED ON-SITE IN THE AREA DESIGNATED ON THIS PLAN OR AS APPROVED BY THE OWNERS REPRESENTATIVE. STOCKPILED EXCAVATED MATERIAL SHALL HAVE TWO ROWS OF SILT FENCE LOCATED AROUND ITS PERIMETER. ALL STOCKPILED MATERIAL SHALL BE MAINTAINED IN AN ORDERLY MANNER SO AS NOT TO IMPEDE ON PEDESTRIAN AND/OR VEHICULAR TRAFFIC CIRCULATION ROUTES.
7. DUST SHALL BE CONTROLLED BY SPRINKLING OR OTHER APPROVED METHODS AS NECESSARY, OR AS DIRECTED BY THE OWNERS REPRESENTATIVE.
8. ALL STORMWATER MANAGEMENT PRACTICES SHALL REMAIN UNDISTURBED AND BE PROTECTED FROM HEAVY MACHINERY TRAFFIC DURING CONSTRUCTION. HOWEVER DURING CONSTRUCTION OF THE PRACTICE THE CONTRACTOR SHALL MINIMIZE AND AVOID HEAVY MACHINERY TRAFFIC TO THE MAXIMUM EXTENT PRACTICABLE. THERE SHALL BE NO STORAGE OF MATERIALS WITHIN AREAS TO BE USED FOR STORMWATER MANAGEMENT PRACTICES. THE CONTRACTOR SHALL INSTALL CONSTRUCTION FENCE AROUND THE PRACTICE TO DISCOURAGE VEHICLE TRAFFIC.
9. ALL EXPOSED SLOPES AND GRADED/DISTURBED AREAS, THAT WILL NOT BE FURTHER DISTURBED WITHIN 7 CALENDAR DAYS, SHALL BE TEMPORARILY SEEDED WITHIN 24 HOURS OF DISTURBANCE, IN ACCORDANCE WITH THE NEW YORK STATE DEPARTMENT OF ENVIRONMENTAL CONSERVATION (NYSDEC) "EROSION AND SEDIMENT CONTROL GUIDELINES" AND THE ANSI A300 "BEST MANAGEMENT PRACTICES FOR TREE AND SHRUB PLANTING, TRANSPLANTING, MAINTENANCE AND CARE," PREPARED BY THE INTERNATIONAL SOCIETY OF ARBORICULTURE (ISA), LATEST EDITIONS, AS FOLLOWS:
   A. SEED MIXTURE AND RATE OF APPLICATION:
   A.1. IN SPRING, SUMMER OR EARLY FALL, SEED THE AREA WITH RYEGRASS (ANNUAL OR PERENNIAL) AT 30 POUNDS PER ACRES (APPROXIMATELY 0.7 POUNDS/1000 SQUARE FEET OR USE 1 POUND/1000 SQUARE FEET).
   A.2. IN LATE FALL OR EARLY WINTER, SEED THE AREA WITH CERTIFIED 'AROOSTOOK' WINTER RYE (CEREAL RYE) AT 100 POUNDS PER ACRE (2.5 POUNDS/1000 SQUARE FEET).
   B. APPLICATION SHALL BE UNIFORM BY MECHANICAL OR HYDROSEED METHODS.
   C. MULCH ALL SEEDED AREAS WITH STRAW AT A RATE OF 2 TONS PER ACRE (90 POUNDS PER 1,000 SQUARE FEET) SUCH THAT THE MULCH FORMS A CONTINUOUS BLANKET.
10. ALL EXPOSED SLOPES AND GRADED/DISTURBED AREAS, THAT WILL NOT BE FURTHER DISTURBED WITHIN 30 CALENDAR DAYS BUT LESS THEN 1 YEAR, SHALL BE TEMPORARILY SEEDED WITHIN 7 DAYS AFTER SUSPENSION OF GRADING, IN ACCORDANCE WITH THE CONNECTICUT DEPARTMENT OF ENVIRONMENTAL PROTECTION (CTDEP) "CONNECTICUT GUIDELINES FOR SOIL EROSION AND SEDIMENT CONTROL" AND THE ANSI A300 "BEST MANAGEMENT PRACTICES FOR TREE AND SHRUB PLANTING, TRANSPLANTING, MAINTENANCE AND CARE," PREPARED BY THE INTERNATIONAL SOCIETY OF ARBORICULTURE (ISA), LATEST EDITIONS, AS FOLLOWS:
   A. FOR SEED MIXTURE AND RATE OF APPLICATION CONTRACTOR SHALL REFER TO FIGURE TS-2 IN THE CONNECTICUT GUIDELINES FOR SOIL EROSION AND SEDIMENT CONTROL.
   B. APPLICATION SHALL BE UNIFORM BY MECHANICAL OR HYDROSEED METHODS. SEEDING RATES SHALL BE INCREASED BY 10% WHEN HYDROSEEDING.
   C. MULCH ALL SEEDED AREAS WITH STRAW AT A RATE OF 2 TONS PER ACRE (90 POUNDS PER 1,000 SQUARE FEET) SUCH THAT THE MULCH FORMS A CONTINUOUS BLANKET.
11. ALL EXPOSED SLOPES AND GRADED/DISTURBED AREAS, THAT WILL NOT BE FURTHER DISTURBED WITHIN A PERIOD OF 2-6 MONTHS OR NOT SCHEDULED FOR PERMANENT SEED WITHIN 60 CALENDAR DAYS, SHALL BE TEMPORARILY SEEDED WITHIN 24 HOURS OF DISTURBANCE, IN ACCORDANCE WITH THE NEW JERSEY STATE DEPARTMENT OF AGRICULTURE - STATE SOIL CONSERVATION COMMITTEE PUBLICATION "THE STANDARDS FOR SOIL EROSION AND SEDIMENT CONTROL IN NEW JERSEY" AND THE ANSI A300 "BEST MANAGEMENT PRACTICES FOR TREE AND SHRUB PLANTING, TRANSPLANTING, MAINTENANCE AND CARE," PREPARED BY THE INTERNATIONAL SOCIETY OF ARBORICULTURE (ISA), LATEST EDITIONS, AS FOLLOWS:
   A. FOR SEED MIXTURE AND RATE OF APPLICATION CONTRACTOR SHALL REFER TO TABLE 7-2 "TEMPORARY VEGETATIVE STABILIZATION GRASSES, SEEDING RATES, DATES AND DEPTH."
   B. APPLICATION SHALL BE UNIFORM BY MECHANICAL OR HYDROSEED METHODS.
   C. MULCH ALL SEEDED AREAS WITH STRAW AT A RATE OF 2 TONS PER ACRE (90 POUNDS PER 1,000 SQUARE FEET) SUCH THAT THE MULCH FORMS A CONTINUOUS BLANKET.
12. ALL SEEDED AREAS SHALL BE FERTILIZED, RESEEDED, AND MULCHED AS NECESSARY TO MAINTAIN VIGOROUS, DENSE VEGETATIVE COVER.
13. TEMPORARY SEED MIXTURES SHALL NOT BE PLACED ON AREAS WHERE FINAL GRADE HAS BEEN ESTABLISHED AND TOPSOIL HAS BEEN PLACED UNLESS OTHERWISE DIRECTED BY THE PROJECT LANDSCAPE ARCHITECT.
14. VEGETATIVE WASTE TO BE CHIPPED AND REMOVED OFF-SITE OR SPREAD ON-SITE AS AN INTERIM STABILIZATION METHOD.

PHASE 1 - SEQUENCE OF CONSTRUCTION

CONSTRUCTION SHALL BE SEQUENCED IN SUCH A MANNER THAT ANY AREA WHICH IS DISTURBED SHALL FIRST BE PROTECTED WITH SEDIMENT EROSION CONTROLS AS INDICATED ON THIS PLAN. THE SEQUENCE OF CONSTRUCTION IS AS FOLLOWS:

1. PRE-CONSTRUCTION MEETING SHALL BE HELD WITH REPRESENTATIVES OF THE TOWN OF NORTH CASTLE AND NYCDEP.
2. ESTABLISH STABILIZED CONSTRUCTION ACCESS AND STAGING AREAS.
3. STAKE OUT LIMITS OF THE PROPOSED STORMWATER INFILTRATION BASINS WITH ORANGE CONSTRUCTION FENCE.
4. INSTALL SILT FENCE, INLET PROTECTION AND TREE PROTECTION FENCE AS SHOWN ON PLANS.
5. DEMOLISH NORTHERN OFFICE BUILDING, BUILDING CONNECTION BRIDGE, PARKING GARAGE AND HOUSE TO FOUNDATIONS.
6. CLEAR AND GRUB FOR TEMPORARY SEDIMENT TRAPS AND SEDIMENT BASINS. STRIP AND STOCKPILE SOIL. STOCKPILE WHERE INDICATED ON PLANS AND COVER WITH SEED AND MULCH.
7. BEGIN EXCAVATION OF TEMPORARY SEDIMENT TRAPS AND SEDIMENT DETENTION BASINS.
8. INSTALL OUTLET CONTROL STRUCTURES, TEMPORARY RISERS AND ANTI-VORTEX DEVICES, PERFORATED RISERS AND EMERGENCY SPILLWAYS.
9. ESTABLISH TEMPORARY DIVERSION DITCHES PRIOR TO ANY OTHER CLEARING OR GRADING.
10. CLEAR AREAS TO BE DEVELOPED. STRIP TOPSOIL. STOCKPILE WHERE INDICATED ON PLAN AND COVER WITH SEED AND MULCH.
11. ROUGH GRADE THE SITE AND ESTABLISH SWALES WITH CHECK DAMS.
12. BEGIN BUILDING OF PARKING GARAGE AND 21 TOWNHOUSE BUILDINGS (68 UNITS), CLUBHOUSE AND POOL, AND ROADWAY CONSTRUCTION.
13. INSTALL STORM STRUCTURES AND ASSOCIATED STORM SYSTEM PIPING COMPLETE. IMMEDIATELY INSTALL INLET PROTECTION. INSTALL PUG IN BMH-C3.
14. INSTALL REMINING UTILITIES.
15. INSTALL CURBING AND WALKWAYS.
16. INSTALL PAVEMENT SUBBASE AND BINDER COURSE.
17. REDISTRIBUTE TOPSOIL, INSTALL LANDSCAPING, STABILIZED TURF AND PERMANENT GROUND COVERS.
18. THE CONTRIBUTING DRAINAGE AREA SHALL BE COMPLETELY STABILIZED PRIOR TO REMOVING THE EROSION CONTROL DEVICES AND CONVERTING THE TEMPORARY SEDIMENT TRAPS AND BASINS TO PERMANENT STORMWATER MANAGEMENT PRACTICES.
19. CLEAN PAVEMENT AND STORM SYSTEM OF ALL ACCUMULATED SEDIMENT IN CONJUNCTION WITH THE REMOVAL OF ALL TEMPORARY EROSION AND SEDIMENT AND CONTROLS.
20. INSTALL PAVEMENT TOP COURSE
21. COMPLETE GRADING AND LANDSCAPING FOR THE PERMANENT STORMWATER MANAGEMENT PRACTICES.
22. REMOVE PLUG FROM BMH-C3.

PHASE 2 - SEQUENCE OF CONSTRUCTION

CONSTRUCTION SHALL BE SEQUENCED IN SUCH A MANNER THAT ANY AREA WHICH IS DISTURBED SHALL FIRST BE PROTECTED WITH SEDIMENT EROSION CONTROLS AS INDICATED ON THIS PLAN. THE SEQUENCE OF CONSTRUCTION IS AS FOLLOWS:

1. PRE-CONSTRUCTION MEETING SHALL BE HELD WITH REPRESENTATIVES OF THE TOWN OF NORTH CASTLE AND NYCDEP.
2. ESTABLISH STABILIZED CONSTRUCTION ACCESS AND STAGING AREAS.
3. STAKE OUT LIMITS OF THE PROPOSED STORMWATER INFILTRATION AREAS WITH ORANGE CONSTRUCTION FENCE.
4. INSTALL SILT FENCE, INLET PROTECTION AND TREE PROTECTION FENCE AS SHOWN ON PLANS.
5. CLEAR AND GRUB FOR SEDIMENT TRAPS. STRIP AND STOCKPILE SOIL. STOCKPILE WHERE INDICATED ON PLANS AND COVER WITH SEED AND MULCH.
6. EXCAVATE FOR TEMPORARY SEDIMENT TRAPS.
7. ESTABLISH TEMPORARY DIVERSION DITCHES PRIOR TO ANY OTHER CLEARING OR GRADING.
8. CLEAR AREAS TO BE DEVELOPED. STRIP TOPSOIL. STOCKPILE WHERE INDICATED ON PLANS AND COVER WITH SEED AND MULCH.
9. ROUGH GRADE THE SITE AND ESTABLISH SWALES WITH CHECK DAMS.
10. BEGIN BUILDING OF 20 TOWNHOUSE BUILDINGS (57 UNITS) AND ROAD CONSTRUCTION. SEED AND MULCH ALL DISTURBED SLOPES.
11. INSTALL STORM DRAINAGE SYSTEM. IMMEDIATELY INSTALL INLET PROTECTION. INSTALL PLUG IN BMH-A4.
12. INSTALL REMAINING UTILITIES.
13. INSTALL CURBING AND WALKWAYS.
14. INSTALL PAVEMENT SUBBASE AND BINDER COURSE FOR ROADS.
15. REDISTRIBUTE TOPSOIL, INSTALL LANDSCAPING, STABILIZED TURF AND PERMANENT GROUND COVERS.
16. THE CONTRIBUTING DRAINAGE AREA SHALL BE COMPLETELY STABILIZED PRIOR TO REMOVING THE EROSION CONTROL DEVICES AND CONVERTING THE TEMPORARY SEDIMENT BASIN TO A PERMANENT DETENTION BASIN.
17. CLEAN PAVEMENT AND STORM SYSTEM OF ALL ACCUMULATED SEDIMENT IN CONJUNCTION WITH THE REMOVAL OF ALL TEMPORARY EROSION AND SEDIMENT AND CONTROLS.
18. INSTALL PAVEMENT TOP COURSE.
19. COMPLETE GRADING AND LANDSCAPING FOR THE PERMANENT STORMWATER MANAGEMENT PRACTICES.
20. REMOVE PLUG FROM BMH-A4

APPROVED BY TOWN OF NORTH CASTLE PLANNING BOARD RESOLUTION, DATED ______

______ DATE: ______
CHRISTOPHER CARTHY, CHAIRMAN,
TOWN OF NORTH CASTLE PLANNING BOARD

ENGINEERING PLANS REVIEWED FOR CONFORMANCE TO RESOLUTION

______ DATE: ______
JOSEPH M. CERMELE, PE
KSCJ CONSULTING
CONSULTING TOWN ENGINEERS

No.	Revision	Date	By
1.	REVISED FEIS	01/20/2023	BMS
2.	PLANNING BOARD SUBMISSION	10/06/2023	BMS
3.	TOWN CONSERVATION BOARD SUBMISSION	10/31/2023	BMS
4.	PLANNING BOARD RESUBMISSION	11/10/2023	BMS
5.	PLANNING BOARD RESUBMISSION	12/21/2023	BMS

Previous Editions Obsolete

APPLICANT/OWNER:
AIRPORT CAMPUS I-V LLC
46 WESTCHESTER AVENUE
POUND RIDGE, NY 10576

JMC Planning, Engineering, Landscape Architecture & Land Surveying, PLLC
JMC Site Development Consultants, LLC
John Meyer Consulting, Inc.
120 BEDFORD ROAD • ARMONK, NY 10504
voice 914.273.5225 • fax 914.273.2102
www.jmcpllc.com

JMC

EROSION AND SEDIMENT CONTROL PLAN

AIRPORT CAMPUS
113 KING STREET (NY ROUTE 120)
NORTH CASTLE, NY 10504

ANY ALTERATION OF PLANS, SPECIFICATIONS, PLATS AND REPORTS BEARING THE SEAL OF A LICENSED PROFESSIONAL ENGINEER OR LICENSED LAND SURVEYOR IS A VIOLATION OF SECTION 7209 OF THE NEW YORK STATE EDUCATION LAW, EXCEPT AS PROVIDED FOR BY SECTION 7209, SUBSECTION 2.

STATE OF NEW YORK • DAVID P. LOMBARDI • 071001 • LICENSED PROFESSIONAL ENGINEER

Drawn: BMS	Approved: AG
Scale: 1" = 40'	
Date: 09/21/2022	
Project No: 15072	
15072-E&S	C-402	SE.scr
Drawing No: C-402	

NOT FOR CONSTRUCTION

COPYRIGHT © 2023 by JMC All Rights Reserved. No part of this document may be reproduced, stored in a retrieval system, or transmitted in any form or by any means, electronic, mechanical, photocopying, recording or otherwise, without the prior written permission of JMC PLANNING, ENGINEERING, LANDSCAPE ARCHITECTURE & LAND SURVEYING, PLLC | JMC SITE DEVELOPMENT CONSULTANTS, LLC | JOHN MEYER CONSULTING, INC. (JMC). Any modifications or alterations to this document without the written permission of JMC shall render them invalid and unusable.

LEGEND

- EXISTING PROPERTY LINE
- ADJACENT PROPERTY LINE
- EXISTING SETBACK LINE
- EXISTING EASEMENT LINE
- EXISTING ROADWAY CENTER LINE
- WF-43 WF-44 WF-45 EXISTING WETLAND LINE AND DELINEATION
- EXISTING BUILDING OVERHANG
- EXISTING BUILDING LINE
- EXISTING PAVEMENT EDGE
- EXISTING CURB LINE
- EXISTING STONE WALL
- EXISTING RETAINING WALL
- EXISTING FENCE
- EXISTING TREE
- EXISTING TREE LINE
- EXISTING PAINT
- EXISTING PARKING WITH NUMBER OF SPACES
- EXISTING ACCESSIBLE PARKING WITH NUMBER OF SPACES
- EXISTING PEDESTRIAN CROSSING
- EXISTING UTILITY POLE
- EXISTING LIGHT POLE
- EXISTING SIGN
- PROPOSED SUBDIVISION LINE
- EXISTING BUILDING TO REMAIN
- PROPOSED BUILDING
- PROPOSED BUILDING SETBACK
- PROPOSED CONCRETE CURB
- PROPOSED DROP CURB & RAMP
- PROPOSED SAWCUT LINE
- 2H PROPOSED ACCESSIBLE PARKING SPACES WITH NUMBER OF SPACES INDICATED (REFER TO STRIPING DETAILS)
- 5 PROPOSED PARKING SPACES WITH NUMBER OF SPACES INDICATED (REFER TO STRIPING DETAILS)
- PROPOSED CONCRETE SIDEWALK
- PROPOSED MONOLITHIC CONCRETE SIDEWALK & CURB
- PROPOSED DROP CURB AND RAMP
- PROPOSED PAVEMENT
- PROPOSED TOWNHOME PATIO
- PROPOSED TOWNHOME DECK
- PROPOSED MULCH HIKING/NATURE TRAIL
- PROPOSED CONCRETE
- PROPOSED IRREVOCABLE CONSERVATION EASEMENT
- PROPOSED RETAINING WALL (DESIGN BY OTHERS)
- PROPOSED FENCE
- PROPOSED 12" WIDE WHITE STOP LINE
- TRAFFIC SIGN LOCATION & DESIGNATION
- PROPOSED LIGHT POLE LOCATIONS
- PROPOSED HYDRANT

NOTES:

Pumper Fire Truck
Overall Length
Overall Width
Overall Body Height
Min Body Ground Clearance
Track Width
Lock-to-lock time
Max Wheel Angle

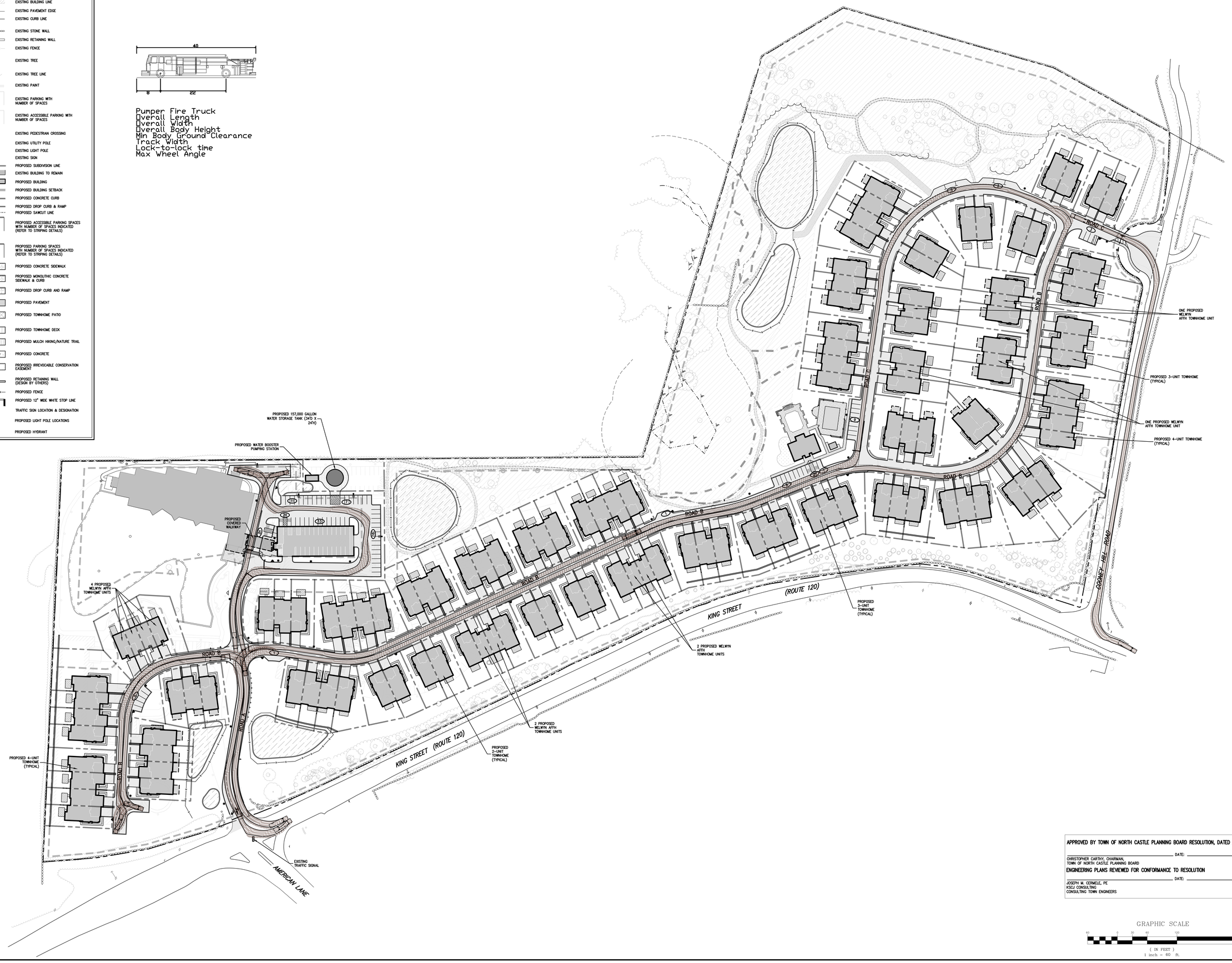

APPROVED BY TOWN OF NORTH CASTLE PLANNING BOARD RESOLUTION, DATED _____

_____ DATE: _____
CHRISTOPHER CARTHY, CHAIRMAN,
TOWN OF NORTH CASTLE PLANNING BOARD

ENGINEERING PLANS REVIEWED FOR CONFORMANCE TO RESOLUTION

_____ DATE: _____
JOSEPH M. CERMELE, PE
KSCJ CONSULTING
CONSULTING TOWN ENGINEERS

GRAPHIC SCALE
60 0 30 60 120 240
(IN FEET)
1 inch = 60 ft.

No.	Revision	Date	By
1.	PLANNING BOARD SUBMISSION	10/06/2023	BMS
2.	PLANNING BOARD RESUBMISSION	11/10/2023	BMS
3.	PLANNING BOARD RESUBMISSION	12/21/2023	BMS

Previous Editions Obsolete

APPLICANT/OWNER:
AIRPORT CAMPUS I-V LLC
46 WESTCHESTER AVENUE
POUND RIDGE, NY 10576

JMC Planning, Engineering, Landscape Architecture & Land Surveying, PLLC
JMC Site Development Consultants, LLC
John Meyer Consulting, Inc.
120 BEDFORD ROAD - ARMONK, NY 10504
voice 914.273.5225 - fax 914.273.2102
www.jmcpllc.com

VEHICLE ACCESS PLAN (FIRE TRUCK)

AIRPORT CAMPUS
113 KING STREET (NY ROUTE 120)
NORTH CASTLE, NY 10504

ANY ALTERATION OF PLANS, SPECIFICATIONS, PLATS AND REPORTS BEARING THE SEAL OF A LICENSED PROFESSIONAL ENGINEER OR LICENSED LAND SURVEYOR IS A VIOLATION OF SECTION 7209 OF THE NEW YORK STATE EDUCATION LAW, EXCEPT AS PROVIDED FOR BY SECTION 7209, SUBSECTION 2.

STATE OF NEW YORK · DAVID P. LOMBARDI · 071051 · LICENSED PROFESSIONAL ENGINEER

Drawn:	BMS	Approved:	AG
Scale:	1" = 60'		
Date:	10/06/2023		
Project No:	15072		
AUTO-TRUCK ANALYSIS:	C-700	TRUCK.scr	
Drawing No:	C-700		

NOT FOR CONSTRUCTION

COPYRIGHT © 2023 by JMC All Rights Reserved. No part of this document may be reproduced, stored in a retrieval system, or transmitted, in any form or by means, electronic, mechanical, photocopying, recording or otherwise, without the prior written permission of JMC PLANNING, ENGINEERING, LANDSCAPE ARCHITECTURE & LAND SURVEYING, PLLC | JMC SITE DEVELOPMENT CONSULTANTS, LLC | JOHN MEYER CONSULTING, INC. (JMC). Any modifications or alterations to this document without the written permission of JMC shall render them invalid and unusable.

LEGEND

- EXISTING PROPERTY LINE
- ADJACENT PROPERTY LINE
- EXISTING SETBACK LINE
- EXISTING EASEMENT LINE
- EXISTING ROADWAY CENTER LINE
- EXISTING WETLAND LINE AND DELINEATION
- EXISTING BUILDING OVERHANG
- EXISTING BUILDING LINE
- EXISTING PAVEMENT EDGE
- EXISTING CURB LINE
- EXISTING STONE WALL
- EXISTING RETAINING WALL
- EXISTING FENCE
- EXISTING TREE
- EXISTING TREE LINE
- EXISTING PAINT
- EXISTING PARKING WITH NUMBER OF SPACES
- EXISTING ACCESSIBLE PARKING WITH NUMBER OF SPACES
- EXISTING PEDESTRIAN CROSSING
- EXISTING UTILITY POLE
- EXISTING LIGHT POLE
- EXISTING SIGN
- PROPOSED SUBDIVISION LINE
- EXISTING BUILDING TO REMAIN
- PROPOSED BUILDING
- PROPOSED BUILDING SETBACK
- PROPOSED CONCRETE CURB
- PROPOSED DROP CURB & RAMP
- PROPOSED SAWCUT LINE
- PROPOSED ACCESSIBLE PARKING SPACES WITH NUMBER OF SPACES INDICATED (REFER TO STRIPING DETAILS)
- PROPOSED PARKING SPACES WITH NUMBER OF SPACES INDICATED (REFER TO STRIPING DETAILS)
- PROPOSED CONCRETE SIDEWALK
- PROPOSED MONOLITHIC CONCRETE SIDEWALK & CURB
- PROPOSED DROP CURB AND RAMP
- PROPOSED PAVEMENT
- PROPOSED TOWNHOME PATIO
- PROPOSED TOWNHOME DECK
- PROPOSED MULCH HIKING/NATURE TRAIL
- PROPOSED CONCRETE
- PROPOSED IRREVOCABLE CONSERVATION EASEMENT
- PROPOSED RETAINING WALL (DESIGN BY OTHERS)
- PROPOSED FENCE
- PROPOSED 12" WIDE WHITE STOP LINE
- TRAFFIC SIGN LOCATION & DESIGNATION
- PROPOSED LIGHT POLE LOCATIONS
- PROPOSED HYDRANT

NOTES:

1. FOR FULL DIMENSIONS REFER TO SHEET C-101

SU-40 - Single Unit Truck

Overall Length	39.500ft
Overall Width	8.000ft
Overall Body Height	13.500ft
Min Body Ground Clearance	1.367ft
Track Width	8.000ft
Lock-to-lock time	5.00s
Max Steering Angle (Virtual)	31.80*

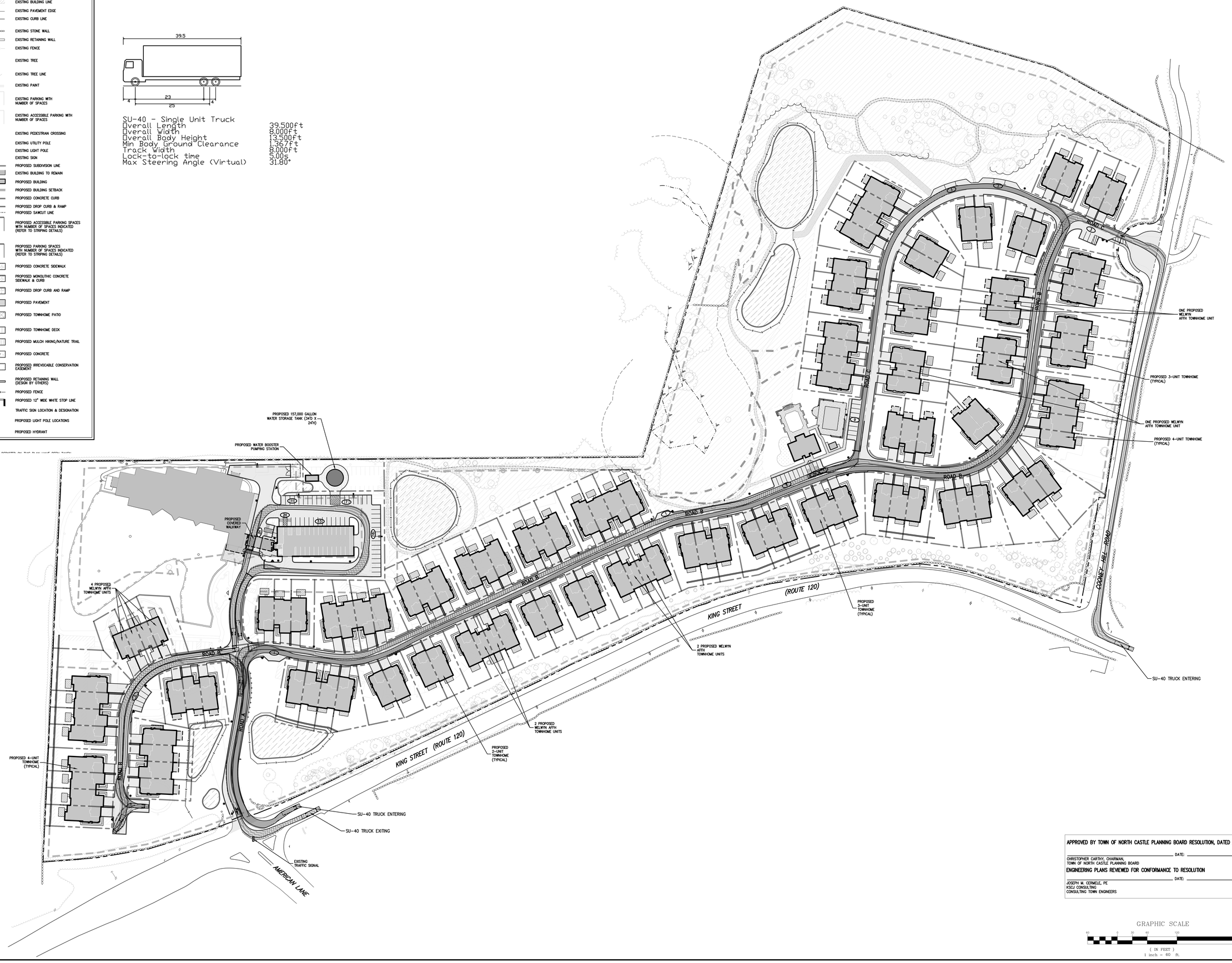

APPROVED BY TOWN OF NORTH CASTLE PLANNING BOARD RESOLUTION, DATED _____

_____ DATE: _____
CHRISTOPHER CARTHY, CHAIRMAN,
TOWN OF NORTH CASTLE PLANNING BOARD

ENGINEERING PLANS REVIEWED FOR CONFORMANCE TO RESOLUTION

_____ DATE: _____
JOSEPH M. CERMELE, PE
KSCJ CONSULTING
CONSULTING TOWN ENGINEERS

GRAPHIC SCALE

60 0 30 60 120 240

(IN FEET)
1 inch = 60 ft.

No.	Revision	Date	By
1.	PLANNING BOARD SUBMISSION	10/06/2023	BMS
2.	PLANNING BOARD RESUBMISSION	11/10/2023	BMS
3.	PLANNING BOARD RESUBMISSION	12/21/2023	BMS

Previous Editions Obsolete

APPLICANT/OWNER:

AIRPORT CAMPUS I-V LLC
46 WESTCHESTER AVENUE
POUND RIDGE, NY 10576

JMC Planning, Engineering, Landscape Architecture & Land Surveying, PLLC
JMC Site Development Consultants, LLC
John Meyer Consulting, Inc.
120 BEDFORD ROAD - ARMONK, NY 10504
voice 914.273.5225 - fax 914.273.2102
www.jmcpllc.com

VEHICLE ACCESS PLAN (DELIVERY TRUCK)

AIRPORT CAMPUS
113 KING STREET (NY ROUTE 120)
NORTH CASTLE, NY 10504

ANY ALTERATION OF PLANS, SPECIFICATIONS, PLATS AND REPORTS BEARING THE SEAL OF A LICENSED PROFESSIONAL ENGINEER OR LICENSED LAND SURVEYOR IS A VIOLATION OF SECTION 7209 OF THE NEW YORK STATE EDUCATION LAW, EXCEPT AS PROVIDED FOR BY SECTION 7209, SUBSECTION 2.

STATE OF NEW YORK · DAVID P. LOMBARDI · 071051 · LICENSED PROFESSIONAL ENGINEER

Drawn:	BMS	Approved:	AG
Scale:	1" = 60'		
Date:	10/06/2023		
Project No:	15072		
AUTO-TRUCK ANALYSIS:	C-701	TRUCK.scr	
Drawing No:	C-701		

NOT FOR CONSTRUCTION

COPYRIGHT © 2023 by JMC All Rights Reserved. No part of this document may be reproduced, stored in a retrieval system, or transmitted, in any form or by means, electronic, mechanical, photocopying, recording or otherwise, without the prior written permission of JMC PLANNING, ENGINEERING, LANDSCAPE ARCHITECTURE & LAND SURVEYING, PLLC | JMC SITE DEVELOPMENT CONSULTANTS, LLC | JOHN MEYER CONSULTING, INC. (JMC). Any modifications or alterations to this document without the written permission of JMC shall render them invalid and unusable.

LEGEND

- EXISTING PROPERTY LINE
- ADJACENT PROPERTY LINE
- EXISTING SETBACK LINE
- EXISTING EASEMENT LINE
- EXISTING ROADWAY CENTER LINE
- WF-43 WF-44 WF-45 EXISTING WETLAND LINE AND DELINEATION
- EXISTING BUILDING OVERHANG
- EXISTING BUILDING LINE
- EXISTING PAVEMENT EDGE
- EXISTING CURB LINE
- EXISTING STONE WALL
- EXISTING RETAINING WALL
- EXISTING FENCE
- EXISTING TREE
- EXISTING TREE LINE
- EXISTING PAINT
- EXISTING PARKING WITH NUMBER OF SPACES
- EXISTING ACCESSIBLE PARKING WITH NUMBER OF SPACES
- EXISTING PEDESTRIAN CROSSING
- EXISTING UTILITY POLE
- EXISTING LIGHT POLE
- EXISTING SIGN
- PROPOSED SUBDIVISION LINE
- EXISTING BUILDING TO REMAIN
- PROPOSED BUILDING
- PROPOSED BUILDING SETBACK
- PROPOSED CONCRETE CURB
- PROPOSED DROP CURB & RAMP
- PROPOSED SAWCUT LINE
- 2H PROPOSED ACCESSIBLE PARKING SPACES WITH NUMBER OF SPACES INDICATED (REFER TO STRIPING DETAILS)
- 5 PROPOSED PARKING SPACES WITH NUMBER OF SPACES INDICATED (REFER TO STRIPING DETAILS)
- PROPOSED CONCRETE SIDEWALK
- PROPOSED MONOLITHIC CONCRETE SIDEWALK & CURB
- PROPOSED DROP CURB AND RAMP
- PROPOSED PAVEMENT
- PROPOSED TOWNHOME PATIO
- PROPOSED TOWNHOME DECK
- PROPOSED MULCH HIKING/NATURE TRAIL
- PROPOSED CONCRETE
- PROPOSED IRREVOCABLE CONSERVATION EASEMENT
- PROPOSED RETAINING WALL (DESIGN BY OTHERS)
- PROPOSED FENCE
- PROPOSED 12" WIDE WHITE STOP LINE
- TRAFFIC SIGN LOCATION & DESIGNATION
- PROPOSED LIGHT POLE LOCATIONS
- PROPOSED HYDRANT

NOTES:

Rear-Load Garbage Truck	
Overall Length	35.000ft
Overall Width	8.375ft
Overall Body Height	10.546ft
Min Body Ground Clearance	1.000ft
Track Width	8.375ft
Lock-to-lock time	6.00s
Curb to Curb Turning Radius	29.300ft

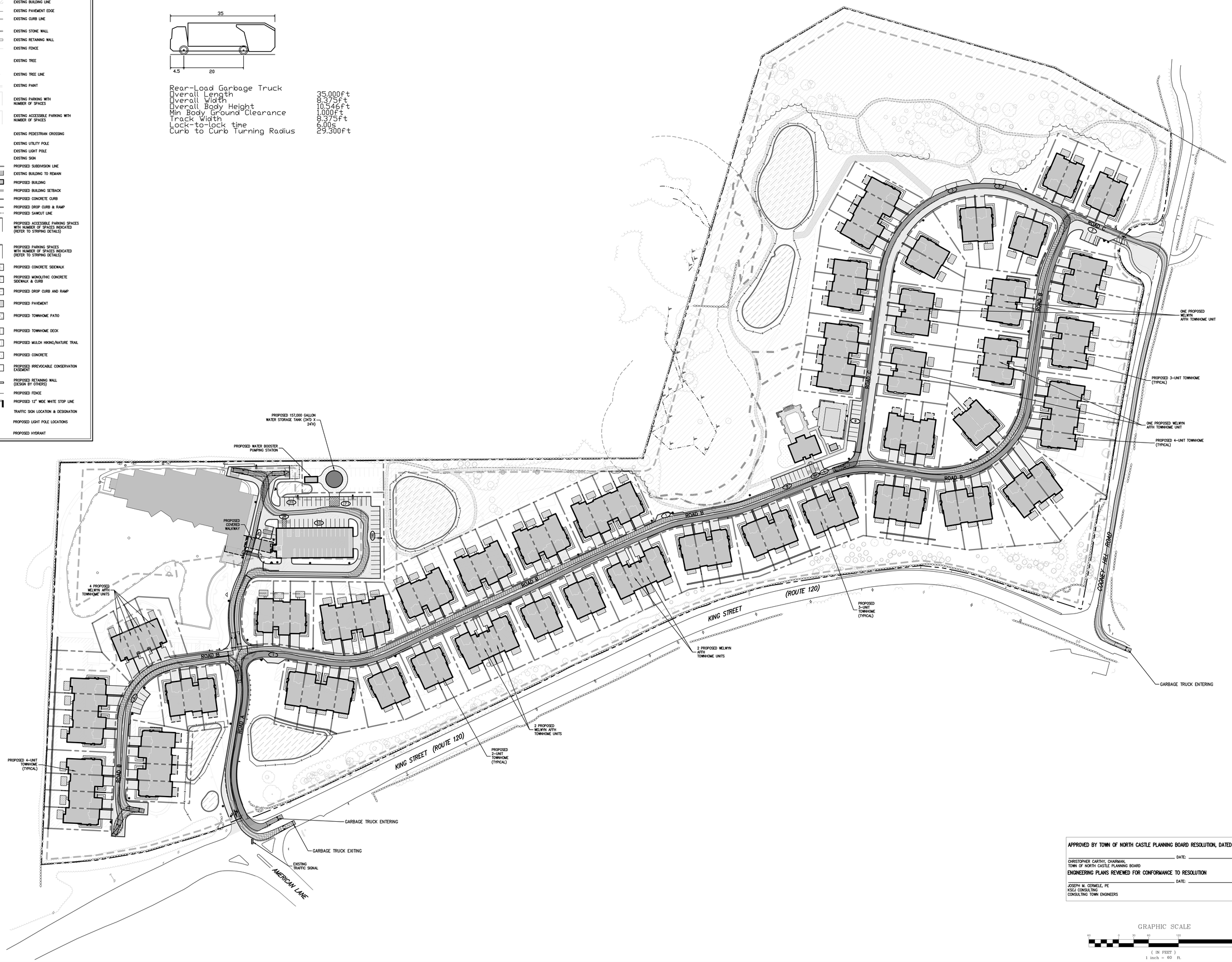

No.	Revision	Date	By
1.	PLANNING BOARD SUBMISSION	10/06/2023	BMS
2.	PLANNING BOARD RESUBMISSION	11/10/2023	BMS
3.	PLANNING BOARD RESUBMISSION	12/21/2023	BMS

Previous Editions Obsolete

APPLICANT/OWNER:

AIRPORT CAMPUS I-V LLC
46 WESTCHESTER AVENUE
POUND RIDGE, NY 10576

JMC Planning, Engineering, Landscape Architecture & Land Surveying, PLLC
JMC Site Development Consultants, LLC
John Meyer Consulting, Inc.
120 BEDFORD ROAD • ARMONK, NY 10504
voice 914.273.5225 • fax 914.273.2102
www.jmcpllc.com

VEHICLE ACCESS PLAN (GARBAGE TRUCK)

AIRPORT CAMPUS
113 KING STREET (NY ROUTE 120)
NORTH CASTLE, NY 10504

ANY ALTERATION OF PLANS, SPECIFICATIONS, PLATS AND REPORTS BEARING THE SEAL OF A LICENSED PROFESSIONAL ENGINEER OR LICENSED LAND SURVEYOR IS A VIOLATION OF SECTION 7209 OF THE NEW YORK STATE EDUCATION LAW, EXCEPT AS PROVIDED FOR BY SECTION 7209, SUBSECTION 2.

APPROVED BY TOWN OF NORTH CASTLE PLANNING BOARD RESOLUTION, DATED _____

_____ DATE: _____
CHRISTOPHER CARTHY, CHAIRMAN,
TOWN OF NORTH CASTLE PLANNING BOARD

ENGINEERING PLANS REVIEWED FOR CONFORMANCE TO RESOLUTION

_____ DATE: _____
JOSEPH M. CERMELE, PE
KSCJ CONSULTING
CONSULTING TOWN ENGINEERS

STATE OF NEW YORK · DAVID P. LOMBARDI · 071001 · LICENSED PROFESSIONAL ENGINEER

GRAPHIC SCALE
60 0 30 60 120 240
(IN FEET)
1 inch = 60 ft.

Drawn:	BMS	Approved:	AG
Scale:	1" = 60'		
Date:	10/06/2023		
Project No:	15072		
AUTO-TRUCK ANALYSIS:	C-702	TRUCK.scr	
Drawing No:	C-702		

NOT FOR CONSTRUCTION

COPYRIGHT © 2023 by JMC All Rights Reserved. No part of this document may be reproduced, stored in a retrieval system, or transmitted, in any form or by means, electronic, mechanical, photocopying, recording or otherwise, without the prior written permission of JMC PLANNING, ENGINEERING, LANDSCAPE ARCHITECTURE & LAND SURVEYING, PLLC | JMC SITE DEVELOPMENT CONSULTANTS, LLC | JOHN MEYER CONSULTING, INC. (JMC). Any modifications or alterations to this document without the written permission of JMC shall render them invalid and unusable.

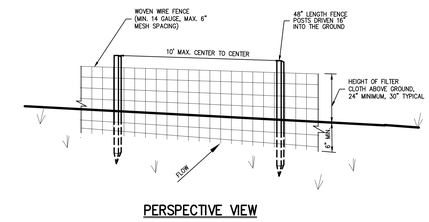

PERSPECTIVE VIEW

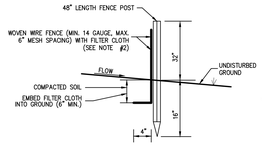

SECTION

SLOPE	STEEPNESS	SLOPE LENGTH/FENCE LENGTH (FT.)
2–10%	50:1 TO 10:1	250/2000
10–20%	10:1 TO 5:1	150/1000
20–33%	5:1 TO 3:1	80/750
33–50%	3:1 TO 2:1	70/350
>50%	>2:1	30/175

*ALL SILT FENCES SHALL BE PLACED AS CLOSE TO THE DISTURBED AREA AS POSSIBLE, BUT AT LEAST 10 FEET FROM THE TOE OF A SLOPE STEEPER THAN 3H:1V, TO ALLOW FOR MAINTENANCE AND ROLL DOWN. THE AREA BEYOND THE FENCE MUST BE UNDISTURBED OR STABILIZED.

NOTES:

1. WOVEN WIRE FENCE SHALL BE FASTENED SECURELY TO FENCE POSTS WITH WIRE TIES OR STAPLES. POSTS SHALL BE STEEL, EITHER T OR U TYPE OR HARDWOOD.
2. FILTER CLOTH SHALL BE FASTENED SECURELY TO WOVEN WIRE FENCE WITH TIES SPACED EVERY 24" AT TOP AND MID SECTION. FENCE SHALL BE WOVEN WIRE, 6" MAXIMUM MESH OPENING.
3. WHEN TWO SECTIONS OF FILTER CLOTH ADJOIN EACH OTHER, THEY SHALL BE OVERLAPPED BY SIX INCHES AND FOLDED. FILTER CLOTH SHALL BE EITHER FILTER X, MIRAFI 100X, STABLINKA T140N, OR APPROVED EQUAL.
4. PREFABRICATED UNITS SHALL BE GEOFAB, ENVIROFENCE, OR APPROVED EQUAL.
5. MAINTENANCE SHALL BE PERFORMED AS NEEDED AND MATERIAL REMOVED AND REPLACED WHEN "BULGES" DEVELOP IN THE SILT FENCE.

SILT FENCE — 1

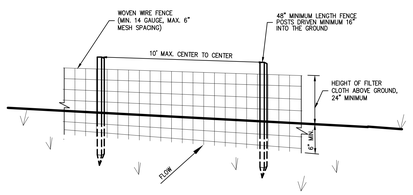

PERSPECTIVE VIEW

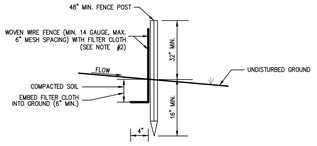

SECTION

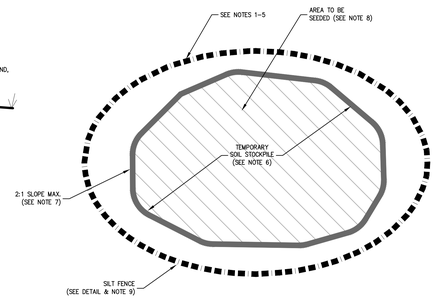

PLAN VIEW

NOTES:

1. WOVEN WIRE FENCE SHALL BE FASTENED SECURELY TO FENCE POSTS WITH WIRE TIES OR STAPLES. POSTS SHALL BE STEEL, EITHER T OR U TYPE OR HARDWOOD.
2. FILTER CLOTH SHALL BE FASTENED SECURELY TO WOVEN WIRE FENCE WITH TIES SPACED EVERY 24" AT TOP AND MID SECTION. FENCE SHALL BE WOVEN WIRE, 6" MAXIMUM MESH OPENING.
3. WHEN TWO SECTIONS OF FILTER CLOTH ADJOIN EACH OTHER, THEY SHALL BE OVERLAPPED BY SIX INCHES AND FOLDED. FILTER CLOTH SHALL BE EITHER FILTER X, MIRAFI 100X, STABLINKA T140N, OR APPROVED EQUAL.
4. PREFABRICATED UNITS SHALL BE GEOFAB, ENVIROFENCE, OR APPROVED EQUAL.
5. MAINTENANCE SHALL BE PERFORMED AS NEEDED AND MATERIAL REMOVED AND REPLACED WHEN "BULGES" DEVELOP IN THE SILT FENCE.
6. THE AREA CHOSEN FOR ALL TEMPORARY SOIL STOCKPILES SHALL BE DRY AND STABLE.
7. ALL STOCKPILED SOIL SHALL NOT CONTAIN SLOPES GREATER THAN 2:1.
8. UPON COMPLETION OF SOIL STOCKPILING, EACH PILE SHALL BE SEEDED WITHIN 24 HOURS. PERENNIAL OR ANNUAL RYEGRASS SHALL BE PLANTED DURING SPRING, SUMMER OR EARLY FALL. WINTER RYE (CEREAL RYE) SHALL BE PLANTED DURING LATE FALL OR EARLY WINTER.
9. ALL STOCKPILES SHALL BE PROTECTED WITH SILT FENCING INSTALLED AROUND THE PERIMETER.

TEMPORARY SOIL STOCKPILE WITH SILT FENCE — 2

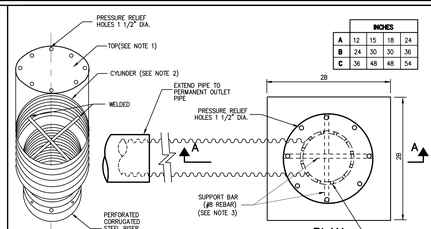

ISOMETRIC

INCHES				
A	12	15	18	24
B	24	30	30	36
C	36	48	48	54

PLAN

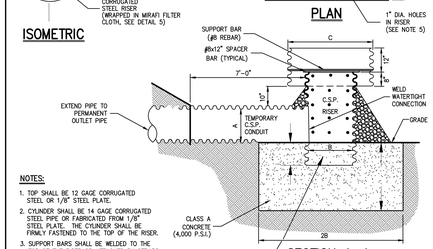

SECTION A–A

NOTES:

1. TOP SHALL BE 12 GAGE CORRUGATED STEEL OR 1/8" STEEL PLATE.
2. CYLINDER SHALL BE 14 GAGE CORRUGATED STEEL PIPE OR FABRICATED FROM 1/8" STEEL PLATE. THE CYLINDER SHALL BE FIRMLY FASTENED TO THE TOP OF THE RISER.
3. SUPPORT BARS SHALL BE WELDED TO THE TOP OF THE RISER OR ATTACHED BY STRAPS BOLTED TO THE TOP OF THE RISER.
4. TEMPORARY RISER AND ANTI-VORTEX DEVICE SHALL BE REMOVED UPON COMPLETION OF PAVEMENT AND ESTABLISHMENT OF SEEDED AREAS.
5. RISER TO BE PERFORATED WITH 1" HOLES SPACED 12" HORIZ. AND VERT. AND LOCATED IN CONCAVE PORTION OF CORRUGATIONS. PERFORATIONS SHALL NOT EXTEND BELOW INVERT ELEVATIONS OF OUTLET PIPE. WRAP RISER IN MIRAFI FW404 FILTER FABRIC OR APPROVED EQUAL AND SURROUND RISER WITH 1 1/2"–2" SIZE CRUSHED STONE.

TEMPORARY RISER & ANTI-VORTEX DEVICE — 3

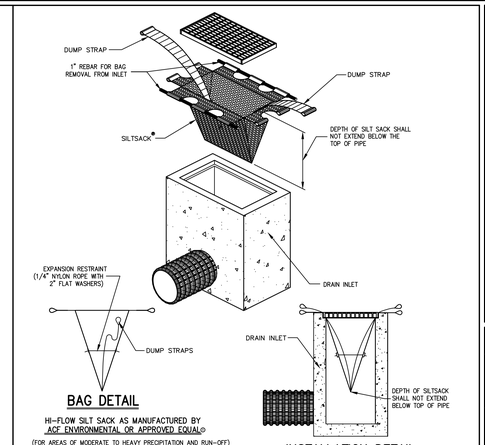

BAG DETAIL

INSTALLATION DETAIL

HI-FLOW SILT SACK AS MANUFACTURED BY ACF ENVIRONMENTAL OR APPROVED EQUAL®

(FOR AREAS OF MODERATE TO HEAVY PRECIPITATION AND RUN-OFF)

PROPERTIES	TEST METHOD	UNITS
GRAB TENSILE STRENGTH	ASTM D-4632	265 LBS
GRAB TENSILE ELONGATION	ASTM D-4632	20 %
PUNCTURE	ASTM D-4833	135 LBS
MULLEN BURST	ASTM D-3786	400 PSI
TRAPEZOID TEAR	ASTM D-4533	45 LBS
UV RESISTANCE	ASTM D-4355	90 %
APPARENT OPENING SIZE	ASTM D-4751	20 US SIEVE
FLOW RATE	ASTM D-4491	200 GAL/MIN/SQ FT
PERMITTIVITY	ASTM D-4491	1.5 SEC $^{-1}$

NOTE:
CURB INLETS SHALL BE TYPE B WITH CURB DEFLECTOR.

MANUFACTURED INSERT INLET PROTECTION — 4

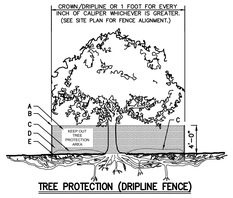

TREE PROTECTION (DRIPLINE FENCE)

A	8.5"X11" SIGN LAMINATED IN PLASTIC SPACED EVERY 50' ALONG FENCE
B	2"X6" STEEL POSTS OR APPROVED EQUAL.
C	5" THICK LAYER OF MULCH.
D	TREE PROTECTION FENCE: HIGH DENSITY POLYETHYLENE FENCING WITH 3.5" X 1.5" OPENINGS; COLOR ORANGE. STEEL POSTS INSTALLED AT 8' O.C.
E	MAINTAIN EXISTING GRADE WITHIN THE TREE PROTECTION FENCE UNLESS OTHERWISE INDICATED ON THE PLANS.
F	INSTALL ROUGH SAWN WOOD WHERE AND AS DIRECTED BY PROJECT LANDSCAPE ARCHITECT OR PROFESSIONAL ARBORIST. SEE CHART FOR WOOD SIZE BOUND WITH 9 GAUGE WIRE.
G	8"–12" THICK LAYER OF MULCH ON MAINTENANCE ROAD. 5" THICK LAYER INSIDE TREE PROTECTION AREA.

TREE DIAMETER	ROUGH SAWN WOOD SIZE
<12"	2"X2"
13"–24"	2"X4"
>25"	2"X6"

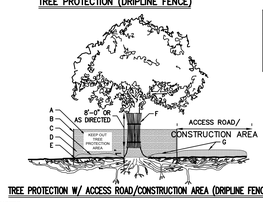

TREE PROTECTION W/ ACCESS ROAD/CONSTRUCTION AREA (DRIPLINE FENCE)

NOTES:

1. SEE SPECIFICATIONS FOR ADDITIONAL TREE PROTECTION REQUIREMENTS.
2. IF THERE IS NO EXISTING IRRIGATION, SEE SPECIFICATIONS FOR WATERING REQUIREMENTS.
3. NO PRUNING SHALL BE PERFORMED EXCEPT BY APPROVED ARBORIST.
4. NO EQUIPMENT SHALL OPERATE INSIDE THE PROTECTIVE FENCING INCLUDING DURING FENCE INSTALLATION AND REMOVAL.
5. SEE SITE PLANS FOR IDENTIFICATIONS/LOCATIONS OF INDIVIDUAL TREES TO BE PROTECTED.
6. ALL EXCAVATION WITHIN THE CROWN/DRIPLINE OF ANY TREE SHALL BE PERFORMED UNDER THE DIRECT SUPERVISION OF THE PROJECT LANDSCAPE ARCHITECT OR PROFESSIONAL ARBORIST. SPECIAL MEASURES, SUCH AS THE USE OF AN AIR SPADE MAY BE REQUIRED.
7. THE CONTRACTOR MAY PROPOSE THE USE OF ENGINEERED MATTING OR OTHER ENGINEERED PRODUCTS IN LIEU OF MULCH, WHICH SHALL BE SUBJECT TO THE REVIEW AND APPROVAL OF ALL AUTHORITIES HAVING JURISDICTION.

TREE PROTECTION — 5

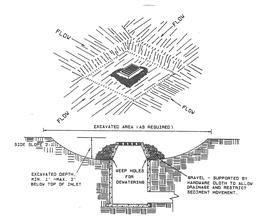

1. CLEAR THE AREA OF ALL DEBRIS THAT WILL HINDER EXCAVATION.
2. GRADE APPROACH TO THE INLET UNIFORMLY AROUND THE BASIN.
3. WEEP HOLES SHALL BE PROTECTED BY/STONE.
4. PROVIDE FREQUENT INSPECTION AND MAINTENANCE. REMOVE ACCUMULATED SEDIMENT AND REPAIR OR REPLACE INLET PROTECTION TO MAINTAIN EFFECTIVENESS OF THE INSTALLATION.
5. UPON STABILIZATION OF CONTRIBUTING DRAINAGE AREA, SEAL WEEP HOLES FILL BASIN WITH STABLE SOIL TO FINAL GRADE. COMPACT IT PROPERLY AND STABILIZE WITH PERMANENT SEEDING.

EXCAVATED DROP INLET PROTECTION — 6

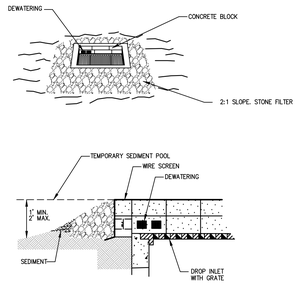

STONE & BLOCK DETAIL

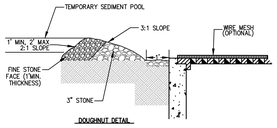

DOUGHNUT DETAIL

NOTES:

1. LAY ONE BLOCK ON EACH SIDE OF THE STRUCTURE ON ITS SIDE FOR DEWATERING. FOUNDATION SHALL BE 2 INCHES MINIMUM BELOW REST OF INLET AND BLOCKS SHALL BE PLACED AGAINST INLET FOR SUPPORT.
2. HARDWARE CLOTH OR 1/2" WIRE MESH SHALL BE PLACED OVER BLOCK OPENINGS TO SUPPORT STONE.
3. USE CLEAN STONE 1/2" TO 3/4" IN DIAMETER PLACED 2" BELOW THE TOP OF THE BLOCK ON A 2:1 SLOPE OR FLATTER.
4. FOR STONE STRUCTURES ONLY, A 1 FOOT THICK LAYER OF THE FILTER STONE WILL BE PLACED AGAINST THE 3" STONE AS SHOWN ON THE DRAWINGS.

STONE & BLOCK DROP INLET PROTECTION — 7

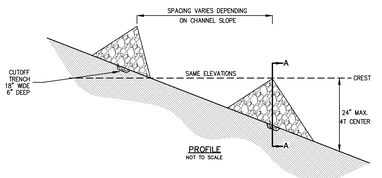

PROFILE
NOT TO SCALE

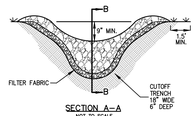

SECTION A–A
NOT TO SCALE

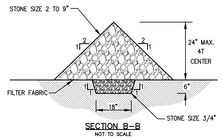

SECTION B–B
NOT TO SCALE

CONSTRUCTION SPECIFICATIONS:

1. STONE WILL BE PLACED ON A FILTER FABRIC FOUNDATION TO THE LINES, GRADES AND LOCATIONS SHOWN IN THE PLAN.
2. SET SPACING OF CHECK DAMS TO ASSURE THAT THE ELEVATIONS OF THE CREST OF THE DOWNSTREAM DAM IS AT THE SAME ELEVATION OF THE TOE OF THE UPSTREAM DAM.
3. EXTEND THE STONE A MINIMUM OF 1.5 FEET BEYOND THE DITCH BANK TO PREVENT CUTTING AROUND THE DAM.
4. PROTECT THE CHANNEL DOWNSTREAM OF THE LOWEST CHECK DAM FROM SCOUR AND EROSION WITH STONE OR LINER AS APPROPRIATE.
5. ENSURE THAT CHANNEL APPURTENANCES SUCH AS CULVERT ENTRANCES BELOW CHECK DAMS ARE NOT SUBJECT TO DAMAGE OR BLOCKAGE FROM DISPLACED STONES.

MAXIMUM DRAINAGE AREA 2 ACRES.

STONE CHECK DAM — 8

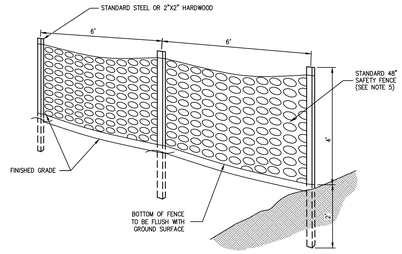

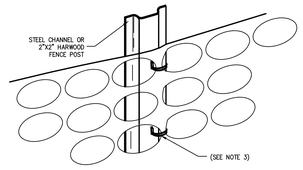

NOTES:

1. SPACE SUPPORT FENCE POSTS AT 6 FOOT INTERVALS.
2. DRIVE SUPPORT POSTS 2 FEET INTO GROUND.
3. FIRMLY FASTEN FENCE MATERIAL IN PLACE BY WIRING TO FENCE POST WHILE MAINTAINING TENSION ACROSS FULL HEIGHT OF FENCE. WIRING SHALL BE DONE IN A MANNER THAT WILL PREVENT SAGGING OF FENCE MATERIAL.
4. PROVIDE PERIODIC INSPECTION AND MAINTENANCE OF FENCE INCLUDING REPAIRS AS NECESSARY AND REQUIRED.
5. PLASTIC FENCE SHALL BE INTERNATIONAL ORANGE COLOR, AS MANUFACTURED BY ADPI ENTERPRISES, INC. OR APPROVED EQUAL.
6. REMOVE CONSTRUCTION FENCE AS DIRECTED BY THE OWNER'S FIELD REPRESENTATIVE.

CONSTRUCTION FENCE — 9

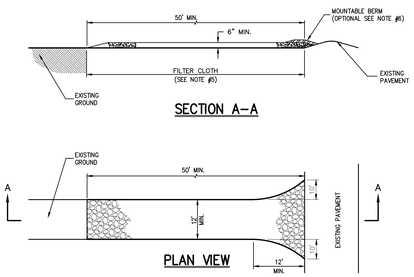

SECTION A–A

PLAN VIEW

NOTES

1. STONE SIZE – USE 1" TO 4" STONE, OR RECLAIMED OR RECYCLED CONCRETE EQUIVALENT.
2. LENGTH – AS REQUIRED, BUT NOT LESS THAN 50 FEET.
3. THICKNESS – NOT LESS THAN SIX (6) INCHES.
4. WIDTH – 12 FOOT MINIMUM, BUT NOT LESS THAN THE FULL WIDTH AT POINTS WHERE INGRESS OR EGRESS OCCURS. 24 FOOT MINIMUM IF SINGLE ENTRANCE TO SITE.
5. FILTER CLOTH TO BE PLACED OVER THE ENTIRE WIDTH AND LENGTH OF AREA PRIOR TO PLACING OF STONE.
6. SURFACE WATER – ALL SURFACE WATER FLOWING OR DIVERTED TOWARD CONSTRUCTION ENTRANCES SHALL BE PIPED BENEATH THE ENTRANCE. IF PIPING IS IMPRACTICAL, A MOUNTABLE BERM WITH 5:1 SLOPES WILL BE PERMITTED.
7. MAINTENANCE – THE ENTRANCE SHALL BE MAINTAINED IN A CONDITION WHICH WILL PREVENT TRACKING OR FLOWING OF SEDIMENT ONTO PUBLIC RIGHTS–OF–WAY. THIS MAY REQUIRE PERIODIC TOP DRESSING WITH ADDITIONAL STONE AS CONDITIONS DEMAND AND REPAIR AND/OR CLEANOUT OF ANY MEASURE USED TO TRAP SEDIMENT. ALL SEDIMENT SPILLED, DROPPED, WASHED OR TRACKED ONTO PUBLIC RIGHTS–OF–WAY MUST BE REMOVED IMMEDIATELY.
8. WASHING – WHEELS SHALL BE CLEANED TO REMOVE SEDIMENT PRIOR TO ENTRANCE ONTO PUBLIC RIGHTS–OF–WAY. WHEN WASHING IS REQUIRED, IT SHALL BE DONE ON AN AREA STABILIZED WITH STONE AND WHICH DRAINS INTO AN APPROVED SEDIMENT TRAPPING DEVICE.
9. PERIODIC INSPECTION AND NEEDED MAINTENANCE SHALL BE PROVIDED AFTER EACH RAIN.

STABILIZED CONSTRUCTION ACCESS — 10

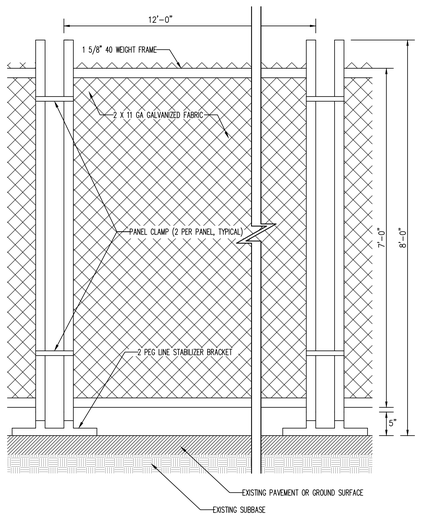

NOTE:
STABILIZED BRACKET TO BE HOT DIPPED GALVANIZED STEEL PIPE.

TEMPORARY CHAIN LINK CONSTRUCTION FENCE — 11

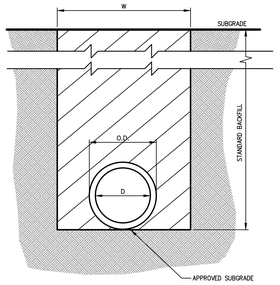

D=INSIDE DIAMETER, SPAN, OR RISE
O.D.=OUTSIDE BARREL DIAMETER, SPAN OR RISE
H.D.=OUTSIDE DIAMETER, SPAN, OR RISE @ BELL OR BAND
W=H.D. + 2.0' – FOR 48" OR SMALLER DIAMETER, SPAN, OR RISE
W=H.D. + 2.5' – FOR GREATER THAN 48" DIAMETER, SPAN, OR RISE

NOTES:

1. IN FILL AREAS, EMBANKMENTS SHALL BE CONSTRUCTED TO A MAXIMUM OF 2 FEET ABOVE TOP OF PIPE BEFORE EXCAVATING TRENCH.
2. FOR HIGH DENSITY POLYETHYLENE DRAIN PIPE (HDPE) INSTALLATION AND POLYVINYL CHLORIDE (PVC) PIPE AND CONDUIT INSTALLATION, USE TYPE II TRENCH.
3. BACKFILL FOR PIPE SHALL BE PLACED EVENLY AND CAREFULLY AROUND AND OVER THE PIPE OR CONDUIT IN SIX (6) INCH MAXIMUM LAYERS. EACH LAYER SHALL BE THOROUGHLY AND CAREFULLY COMPACTED UNTIL TWELVE (12) INCHES OF COVER EXISTS OVER THE PIPE OR CONDUIT. THE REMAINDER OF THE BACKFILL MAY THEN BE PLACED AND COMPACTED IN A MAXIMUM OF TWELVE (12) INCH LAYERS. EACH LAYER SHALL BE COMPACTED BY APPROVED MECHANICAL TAMPING MACHINES. UNLESS OTHERWISE SPECIFIED BACKFILL SHALL BE COMPACTED TO NOT LESS THAN 92% MAXIMUM MODIFIED DENSITY IN ACCORDANCE WITH ASTM DESIGNATION D–1557 IN THE MANNER HEREIN DESCRIBED. BACKFILL SHALL PROCEED UP TO THE LINES AND GRADES AS SHOWN ON THE DRAWINGS.

TYPE I TRENCH (FLAT BOTTOM) — 12

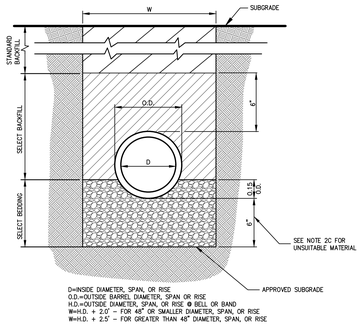

D=INSIDE DIAMETER, SPAN, OR RISE
O.D.=OUTSIDE BARREL DIAMETER, SPAN OR RISE
H.D.=OUTSIDE DIAMETER, SPAN, OR RISE @ BELL OR BAND
W=H.D. + 2.0' – FOR 48" OR SMALLER DIAMETER, SPAN, OR RISE
W=H.D. + 2.5' – FOR GREATER THAN 48" DIAMETER, SPAN, OR RISE

NOTES:

1. FOR TYPE II TRENCH, MATERIAL FOR SELECT BEDDING AND SELECT BACKFILL SHALL BE:
   A. EITHER SAND OR CRUSHED STONE IF NO WATER IS ENCOUNTERED IN TRENCH.
   B. 3/4"CRUSHED STONE IF WATER IS ENCOUNTERED IN TRENCH.
2. TYPE II TRENCH SHALL BE USED IN ALL OF THE FOLLOWING CASES:
   A. FOR ALL HIGH DENSITY POLYETHYLENE DRAIN PIPE (HDPE) AND PVC PIPE AND CONDUIT INSTALLATION.
   B. WHEN ROCK OR HARDPAN IS ENCOUNTERED IN BOTTOM OF TRENCH.
   C. WHEN UNSUITABLE MATERIAL IS ENCOUNTERED IN BOTTOM OF TRENCH. IN SUCH CASE DEPTH OF UNDERCUTTING SHALL BE AS DIRECTED BY THE ENGINEER WITH 6" MINIMUM.
3. FOR ALL TRENCH EXCAVATION IN FILL AREAS, ALL EMBANKMENTS SHALL BE CONSTRUCTED TO A MINIMUM OF 2 FEET ABOVE THE OUTSIDE TOP (AT THE BELL) OF THE PIPE PRIOR TO BEGINNING ANY TRENCH EXCAVATION.
4. BACKFILL FOR PIPE AND CONDUIT SHALL BE PLACED EVENLY AND CAREFULLY AROUND AND OVER THE PIPE OR CONDUIT IN SIX (6) INCH MAXIMUM LAYERS. EACH LAYER SHALL BE THOROUGHLY AND CAREFULLY COMPACTED UNTIL TWELVE (12) INCHES OF COVER EXISTS OVER THE PIPE OR CONDUIT. THE REMAINDER OF THE BACKFILL MAY THEN BE PLACED AND COMPACTED IN A MAXIMUM OF TWELVE (12) INCH LAYERS. EACH LAYER SHALL BE COMPACTED BY APPROVED MECHANICAL TAMPING MACHINES. UNLESS OTHERWISE SPECIFIED BACKFILL SHALL BE COMPACTED TO NOT LESS THAN 92% MAXIMUM MODIFIED DENSITY IN ACCORDANCE WITH ASTM DESIGNATION D–1557 IN THE MANNER HEREIN DESCRIBED. BACKFILL SHALL PROCEED UP TO THE LINES AND GRADES AS SHOWN ON THE DRAWINGS.

TYPE II TRENCH — 13

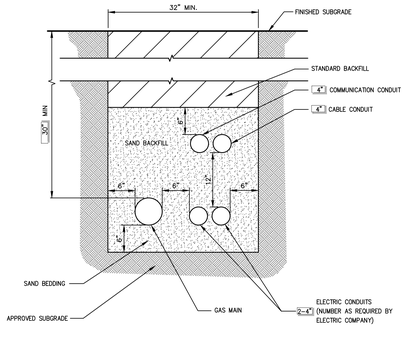

NOTES:

1. UTILITIES TO BE INSTALLED IN ACCORDANCE WITH THE REGULATIONS AND REQUIREMENTS OF THE UTILITY COMPANY HAVING JURISDICTION.
2. BACKFILL FOR PIPE AND CONDUIT SHALL BE PLACED EVENLY AND CAREFULLY AROUND AND OVER THE PIPE OR CONDUIT IN SIX (6) INCH MAXIMUM LAYERS. EACH LAYER SHALL BE THOROUGHLY AND CAREFULLY COMPACTED UNTIL TWELVE (12) INCHES OF COVER EXISTS OVER THE PIPE OR CONDUIT. THE REMAINDER OF THE BACKFILL MAY THEN BE PLACED AND COMPACTED IN A MAXIMUM OF TWELVE (12) INCH LAYERS. EACH LAYER SHALL BE COMPACTED BY APPROVED MECHANICAL TAMPING MACHINES. UNLESS OTHERWISE SPECIFIED BACKFILL SHALL BE COMPACTED TO NOT LESS THAN 92% MAXIMUM MODIFIED DENSITY IN ACCORDANCE WITH ASTM DESIGNATION D–1557 IN THE MANNER HEREIN DESCRIBED. BACKFILL SHALL PROCEED UP TO THE LINES AND GRADES AS SHOWN ON THE DRAWINGS.

UTILITY TRENCH DETAIL — 14

NOT FOR CONSTRUCTION

COPYRIGHT © by the JMC All Rights Reserved. No part of this document may be reproduced, stored in a retrieval system, or transmitted, in any form or by means, electronic, mechanical, photocopying, recording or otherwise, without the prior written permission of JMC Site Development Consultants, LLC. (JMC). Any modifications or alterations to this document without the written permission of JMC shall render them invalid and unusable.

APPROVED BY TOWN OF NORTH CASTLE PLANNING BOARD RESOLUTION, DATED _____

CHRISTOPHER CARTHY, CHAIRMAN, TOWN OF NORTH CASTLE PLANNING BOARD — DATE: _____

ENGINEERING PLANS REVIEWED FOR CONFORMANCE TO RESOLUTION

JOSEPH M. CERNIGLIE, PE
KSCC CONSULTING
CONSULTING TOWN ENGINEERS — DATE: _____

No.	Revision	Date	By
1.	PLANNING BOARD SUBMISSION	10/06/2023	BMS
2.	TOWN CONSERVATION BOARD SUBMISSION	10/31/2023	BMS
3.	PLANNING BOARD RESUBMISSION	11/10/2023	BMS
4.	PLANNING BOARD RESUBMISSION	12/21/2023	BMS

Previous Editions Obsolete

APPLICANT:
AIRPORT CAMPUS I–V LLC
46 WESTCHESTER AVENUE
POUND RIDGE, NY 10576

ARCHITECT:
LESSARD DESIGN
8521 LEESBURG PIKE, 7TH FLOOR
VIENNA, VA 22182

JMC Planning, Engineering, Landscape Architecture & Land Surveying, PLLC
JMC Site Development Consultants, LLC
John Meyer Consulting, Inc.
120 BEDFORD ROAD • ARMONK, NY 10504
voice 914.273.5225 • fax 914.273.2102
www.jmcpllc.com

CONSTRUCTION DETAILS

AIRPORT CAMPUS
113 KING STREET (NY ROUTE 120)
NORTH CASTLE, NY 10504

ANY ALTERATION OF PLANS, SPECIFICATIONS, PLATS AND REPORTS BEARING THE SEAL OF A LICENSED PROFESSIONAL ENGINEER OR LICENSED LAND SURVEYOR IS A VIOLATION OF ARTICLE 145 OF THE NEW YORK STATE EDUCATION LAW, EXCEPT AS PROVIDED FOR BY SECTION 7209, SUBSECTION 2.

STATE OF NEW YORK — JOHN P. LOMBARDI — 071001 — LICENSED PROFESSIONAL ENGINEER

Drawn: BMS	Approved: AG
Scale: NOT TO SCALE	
Date: 10/06/2023	
Project No: 15072	
15072-07DAS	C–900	–
Drawing No: C–900	

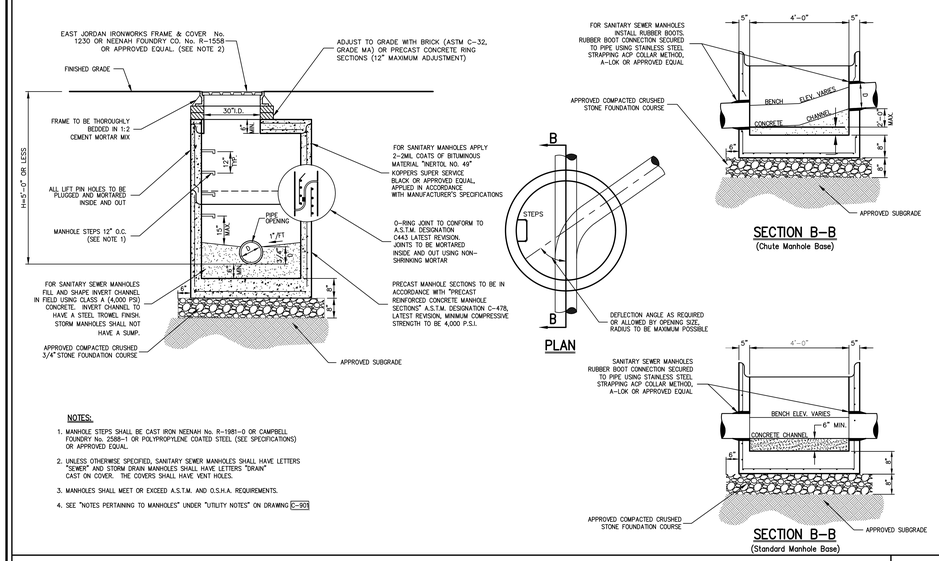

NOTES:

1. MANHOLE STEPS SHALL BE CAST IRON NEENAH No. R-1981-0 OR CAMPBELL FOUNDRY No. 2588-1 OR POLYPROPYLENE COATED STEEL (SEE SPECIFICATIONS) OR APPROVED EQUAL.
2. UNLESS OTHERWISE SPECIFIED, SANITARY SEWER MANHOLES SHALL HAVE LETTERS "SEWER" AND STORM DRAIN MANHOLES SHALL HAVE LETTERS "DRAIN" CAST ON COVER. THE COVERS SHALL HAVE VENT HOLES.
3. MANHOLES SHALL MEET OR EXCEED A.S.T.M. AND O.S.H.A. REQUIREMENTS.
4. SEE "NOTES PERTAINING TO MANHOLES" UNDER "UTILITY NOTES" ON DRAWING C-901

MANHOLE (TYPE A)

(H < 5'-0")

15

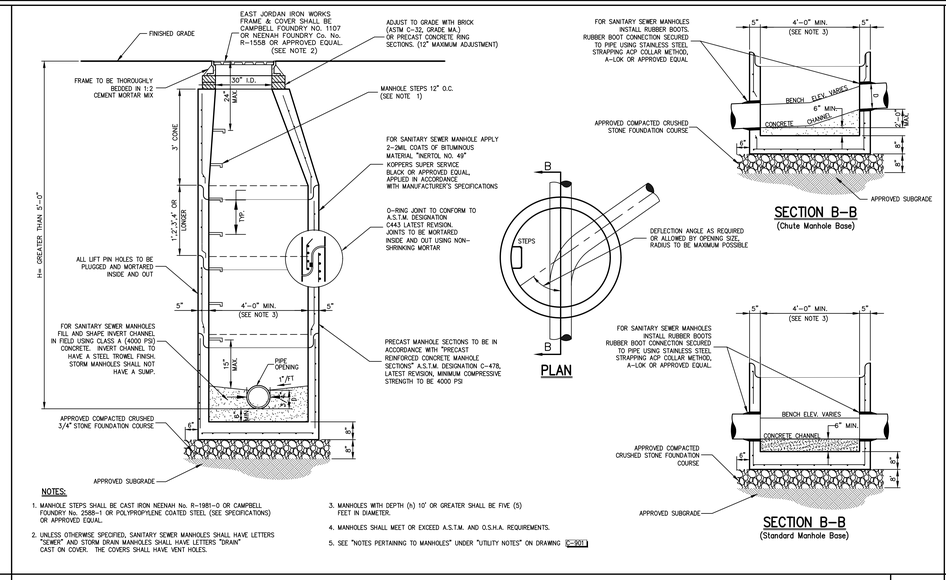

NOTES:

1. MANHOLE STEPS SHALL BE CAST IRON NEENAH No. R-1981-0 OR CAMPBELL FOUNDRY No. 2588-1 OR POLYPROPYLENE COATED STEEL (SEE SPECIFICATIONS) OR APPROVED EQUAL.
2. UNLESS OTHERWISE SPECIFIED, SANITARY SEWER MANHOLES SHALL HAVE LETTERS "SEWER" AND STORM DRAIN MANHOLES SHALL HAVE LETTERS "DRAIN" CAST ON COVER. THE COVERS SHALL HAVE VENT HOLES.
3. MANHOLES WITH DEPTH (h) 10' OR GREATER SHALL BE FIVE (5) FEET IN DIAMETER.
4. MANHOLES SHALL MEET OR EXCEED A.S.T.M. AND O.S.H.A. REQUIREMENTS.
5. SEE "NOTES PERTAINING TO MANHOLES" UNDER "UTILITY NOTES" ON DRAWING C-901

MANHOLE (TYPE B)

(H > 5'-0"<10'-0")

16

NOTES PERTAINING TO DRAIN INLETS

A-1 STEPS WILL NOT BE REQUIRED IN INLETS LESS THAN FOUR (4) FEET IN DEPTH. STEPS WILL BE REQUIRED IN INLETS FOUR (4) FEET OR GREATER IN DEPTH. DEPTHS FOR DRAIN INLETS SHALL BE MEASURED FROM FINISHED GRADE TO INSIDE BOTTOM OF STRUCTURE (INCLUDING SUMP AS APPLICABLE).

A-2 WHEN STEPS ARE REQUIRED, STEPS SHALL COMPLY WITH THE SAME REQUIREMENTS OF ASTM STANDARD C-478, ARTICLE 13 ENTITLED "MANHOLE STEPS & LADDERS".

A-3 FOR MASONRY STRUCTURES, THE FIRST COURSE OF MASONRY SHALL BE SET IN THE CONCRETE FOUNDATION BEFORE THE CONCRETE HAS SET. CONCRETE FOUNDATION SHALL BE CLASS "A"(4000 psi) CONCRETE, TWELVE (12) INCHES THICK AND SHALL EXTEND SIX (6) INCHES BEYOND THE OUTSIDE FACE THE STRUCTURE.

A-4 IT SHALL BE THE CONTRACTOR'S RESPONSIBILITY TO FURNISH AND CONSTRUCT THE PROPER SIZE STRUCTURE INCLUDING THE NECESSARY OPENINGS TO ACCOMMODATE THE WORK AS SHOWN ON THE PLANS OR ORDERED BY THE ENGINEER, AT NO ADDITIONAL COST TO THE OWNER.

A-5 ALL NECESSARY PATCHING FOR DRAIN STRUCTURES SHALL BE ACCOMPLISHED WITH NON-SHRINKING CEMENT MORTAR GROUT, APPROVED EQUAL TO SIKA-SET AS MANUFACTURED BY THE SIKA CHEMICAL CORP.

A-6 FOUNDATIONS FOR PRECAST CONCRETE STRUCTURES SHALL BE SET ON A COMPACTED LAYER OF APPROVED CRUSHED STONE HAVING A MINIMUM COMPACTED THICKNESS OF EIGHT (8) INCHES.

A-7 ALL PIPES SHALL BE CUT FLUSH WITH THE INSIDE WALL OF THE STRUCTURE.

A-8 PROVIDE REINFORCED CONCRETE TOP SLAB FOR OVERSIZED DRAIN INLETS WITH PROPER SIZE OPENING TO ACCOMMODATE INSTALLATION OF FRAME & GRATE.

A-9 FOR MASONRY STRUCTURES GREATER THAN TEN (10) FEET IN DEPTH, THICKNESS OF MASONRY WALLS SHALL BE INCREASED TO TWELVE (12) INCHES.

A-10 FOR ALL STRUCTURES GREATER THAN 10 FEET IN DEPTH, STRUCTURES SHALL PROVIDE MINIMUM INSIDE DIMENSIONS OF 4 FEET X 4 FEET.

NOTES PERTAINING TO MANHOLES

B-1 PRECAST CONCRETE MANHOLES SHALL COMPLY WITH ASTM STANDARD C-478. MANHOLE JOINTS SHALL COMPLY WITH ASTM STANDARD C-443.

B-2 FOR PRECAST CONCRETE MANHOLES FIVE (5) FEET OR LESS IN HEIGHT, TOP CONE SECTION SHALL BE REPLACED WITH PRECAST REINFORCED CONCRETE SLAB (6" MIN. THICKNESS) WITH OPENING OF SUFFICIENT SIZE TO ACCOMMODATE MANHOLE CASTING.

B-3 FOR MANHOLES 10 FEET OR MORE IN DEPTH, MANHOLE DIAMETER SHALL BE FIVE (5) FEET.

B-4 TERMINAL MANHOLE FLOORS SHALL BE SLOPED TOWARD OUTFALL PIPE.

B-5 INVERT CHANNELS FOR PRECAST CONCRETE MANHOLES SHALL BE CONSTRUCTED OF CONCRETE.

B-6 NOTES A-1, A-2, A-4, A-5, A-6 & A-7 UNDER "NOTES PERTAINING TO DRAIN INLETS" ABOVE SHALL APPLY TO MANHOLES.

NOTES PERTAINING TO PRECAST CONCRETE STRUCTURES FOR STORM DRAINS, SANITARY SEWERS AND WATER LINES

C-1 ALL PRECAST CONCRETE STRUCTURES SHALL BE DESIGNED TO ACCOMMODATE AN H-20 DESIGN LOAD.

C-2 STEPS SHALL BE LOCATED WITHIN STRUCTURE TO AVOID PLACEMENT OVER PIPES WHEN PRACTICABLE.

UTILITY NOTES

17

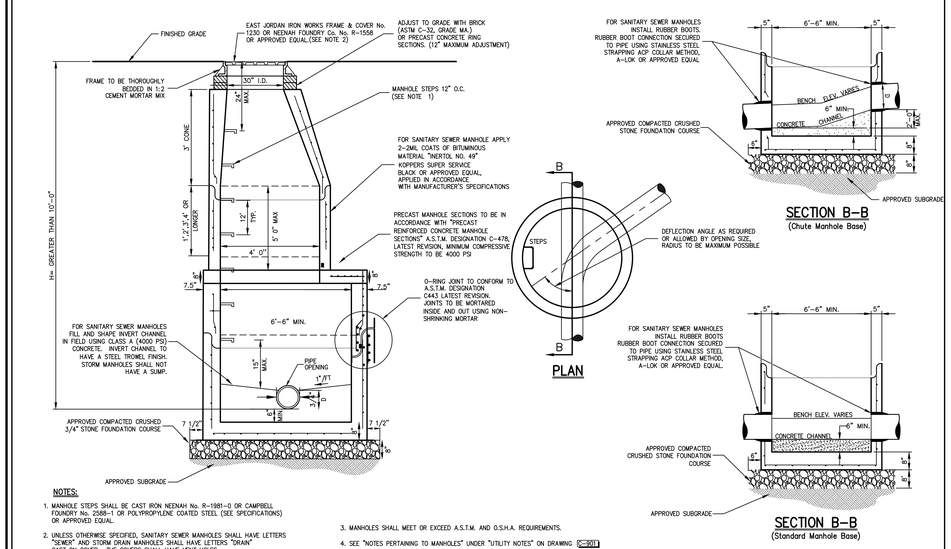

NOTES:

1. MANHOLE STEPS SHALL BE CAST IRON NEENAH No. R-1981-0 OR CAMPBELL FOUNDRY No. 2588-1 OR POLYPROPYLENE COATED STEEL (SEE SPECIFICATIONS) OR APPROVED EQUAL.
2. UNLESS OTHERWISE SPECIFIED, SANITARY SEWER MANHOLES SHALL HAVE LETTERS "SEWER" AND STORM DRAIN MANHOLES SHALL HAVE LETTERS "DRAIN" CAST ON COVER. THE COVERS SHALL HAVE VENT HOLES.
3. MANHOLES SHALL MEET OR EXCEED A.S.T.M. AND O.S.H.A. REQUIREMENTS.
4. SEE "NOTES PERTAINING TO MANHOLES" UNDER "UTILITY NOTES" ON DRAWING C-901

MANHOLE (TYPE D)

(H > 10'-0")

18

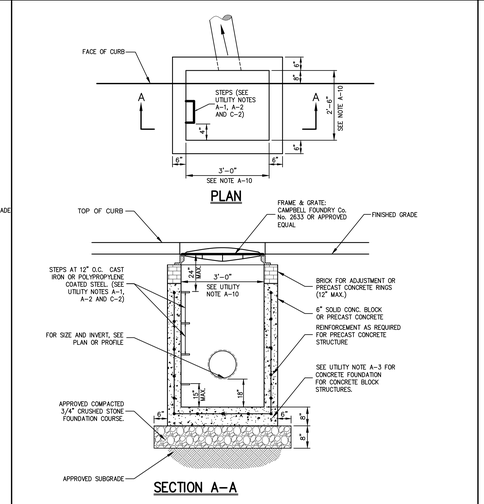

NOTE:

1. SEE NOTES PERTAINING TO DRAIN INLETS UNDER UTILITY NOTES ON DRAWING C-901

DRAIN INLET (TYPE CI)

(with sump-w/o finger underdrains)

19

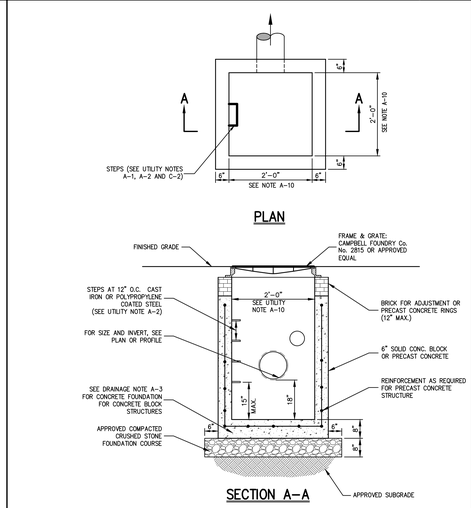

NOTE

1. SEE NOTES PERTAINING TO DRAIN INLETS UNDER UTILITY NOTES ON DRAWING C-901

LAWN INLET (TYPE LI)

(with sump)

20

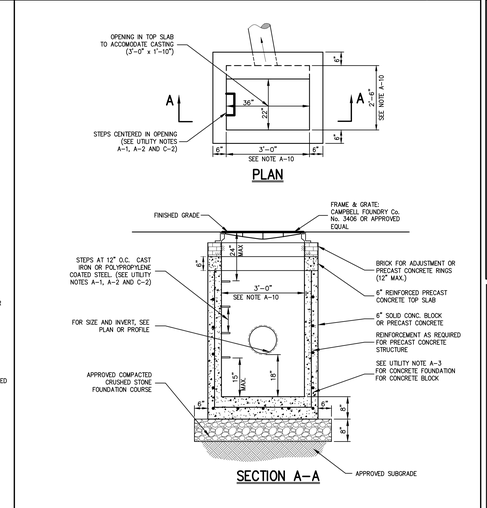

NOTE

1. REINFORCE PRECAST CONCRETE TOP SLAB AND REINFORCE PRECAST CONCRETE STRUCTURE SHALL BE DESIGNED TO ACCOMMODATE AN H-20 DESIGN LOAD.
2. SEE NOTES PERTAINING TO DRAIN INLETS UNDER UTILITY NOTES ON DRAWING C-901

DRAIN INLET (TYPE DI)

(with sump-w/o finger underdrains)

21

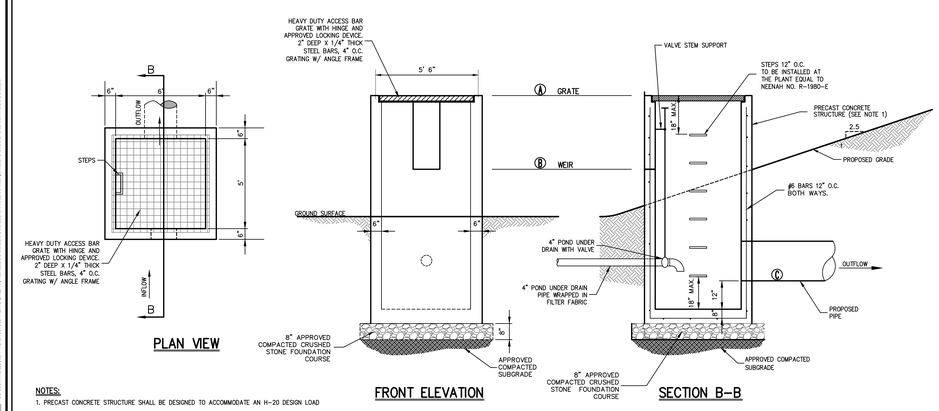

NOTES:

1. PRECAST CONCRETE STRUCTURE SHALL BE DESIGNED TO ACCOMMODATE AN H-20 DESIGN LOAD

OUTLET CONTROL STRUCTURE

22

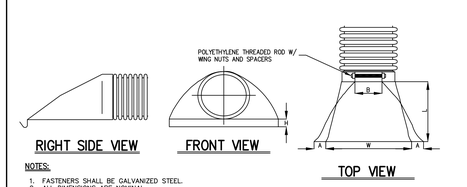

NOTES:

1. FASTENERS SHALL BE GALVANIZED STEEL.
2. ALL DIMENSIONS ARE NOMINAL.

PIPE SIZE	A	B (MAX.)	H	L	W
12"	6.5"	10.0"	6.5"	25.0"	29.0"
15"	6.5"	10.0"	6.5"	25.0"	29.0"
18"	7.5"	15.0"	6.5"	32.0"	35.0"
24"	7.5"	18.0"	6.5"	36.0"	45.0"
30"	7.5"	12.0"	8.6"	58.0"	63.0"
36"	7.5"	25.0"	8.6"	58.0"	63.0"

END SECTION

(PLASTIC)

23

CASCADE separator®

The Cascade Separator®

Advanced Sediment Capture Technology

The **Cascade Separator*** is the newest innovation in stormwater treatment from Contech. The Cascade Separator was developed by Contech's stormwater experts using advanced modeling tools and Contech's industry leading stormwater laboratory.

This innovative hydrodynamic separator excels at sediment capture and retention while also removing hydrocarbons, trash, and debris from stormwater runoff. What makes the Cascade Separator unique is the use of opposing vortices that enhance particle settling and a unique skirt design that allows for sediment transport into the sump while reducing turbulence and resuspension of previously captured material. These two factors allow the Cascade Separator to treat high flow rates in a small footprint, resulting in an efficient and economical solution for any site.

Learn More:
www.ContechES.com/cascade

FEATURE	BENEFIT
Unique skirt design & opposing vortices	Superior TSS removal; reduced system size and costs
Inlet area accepts wide range of inlet pipe angles	Design and installation flexibility
Accepts multiple inlet pipes*	Eliminates the need for separate junction structure
Grate inlet option*	Eliminates the need for a separate grate inlet structure
Internal bypass	Eliminates the need for a separate bypass structure
Clear access to sump and stored pollutants	Fast, easy maintenance

** NJDEP testing based on Cascade Separator with one inlet pipe and no grate inlet*

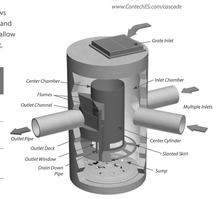

CASCADE MAINTENANCE

Cascade provides unobstructed access to stored pollutants, making it easy to maintain using a vacuum truck, with no requirement to enter the unit.

The Cascade Separator has received New Jersey Department of Environmental Protection (NJDEP) Certification*

An efficient and economical solution CONTECH ENGINEERED SOLUTIONS

WATER QUALITY STRUCTURE

24

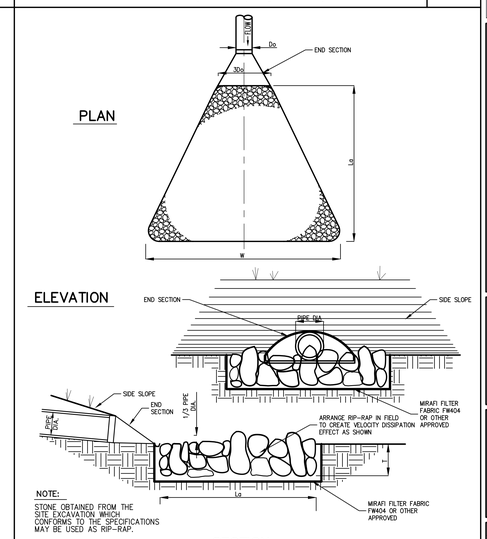

NOTE:
STONE OBTAINED FROM THE SITE EXCAVATION WHICH CONFORMS TO THE SPECIFICATIONS MAY BE USED AS RIP-RAP.

RIP-RAP APRON/ENERGY DISSIPATOR

END SECTION

25

APPROVED BY TOWN OF NORTH CASTLE PLANNING BOARD RESOLUTION, DATED _____

CHRISTOPHER CARTHY, CHAIRMAN, TOWN OF NORTH CASTLE PLANNING BOARD — DATE:

ENGINEERING PLANS REVIEWED FOR CONFORMANCE TO RESOLUTION

JOSEPH M. CERNIGLIA, PE, TOWN OF NORTH CASTLE CONSULTING TOWN ENGINEERS — DATE:

No.	Revision	Date	By
1.	PLANNING BOARD SUBMISSION	10/06/2023	BMS
2.	PLANNING BOARD RESUBMISSION	11/10/2023	BMS
3.	PLANNING BOARD RESUBMISSION	12/21/2023	BMS

Previous Editions Obsolete

APPLICANT:
AIRPORT CAMPUS I-V LLC
46 WESTCHESTER AVENUE
POUND RIDGE, NY 10576

ARCHITECT:
LESSARD DESIGN
8521 LEESBURG PIKE, 7TH FLOOR
VIENNA, VA 22182

JMC Planning, Engineering, Landscape Architecture & Land Surveying, PLLC
JMC Site Development Consultants, LLC
John Meyer Consulting, Inc.
120 BEDFORD ROAD • ARMONK, NY 10504
voice 914.273.5225 • fax 914.273.2102
www.jmcpllc.com

CONSTRUCTION DETAILS

AIRPORT CAMPUS
113 KING STREET (NY ROUTE 120)
NORTH CASTLE, NY 10504

ANY ALTERATION OF PLANS, SPECIFICATIONS, PLATS AND REPORTS BEARING THE SEAL OF A LICENSED PROFESSIONAL ENGINEER OR LICENSED LAND SURVEYOR IS A VIOLATION OF ARTICLE 145 OF THE NEW YORK STATE EDUCATION LAW, EXCEPT AS PROVIDED FOR BY SECTION 7209, SUBSECTION 2.

STATE OF NEW YORK — DAVID P. LOMBARDI — LICENSED PROFESSIONAL ENGINEER — No. 071001

Drawn:	BMS	Approved:	AG
Scale:	NOT TO SCALE		
Date:	10/06/2023		
Project No:	15072		
15072-DETAILS	C-901		-
Drawing No:	C-901		

NOT FOR CONSTRUCTION

COPYRIGHT © 2023 by JMC Site Development Consultants, LLC, John Meyer Consulting, Inc., John Meyer Planning, Engineering, Landscape Architecture & Land Surveying, PLLC, JMC Site Development Consultants, LLC, JMC Planning, Engineering, Landscape Architecture & Land Surveying, PLLC, JMC Site Development Consultants, LLC, John Meyer Consulting, Inc. - All rights reserved

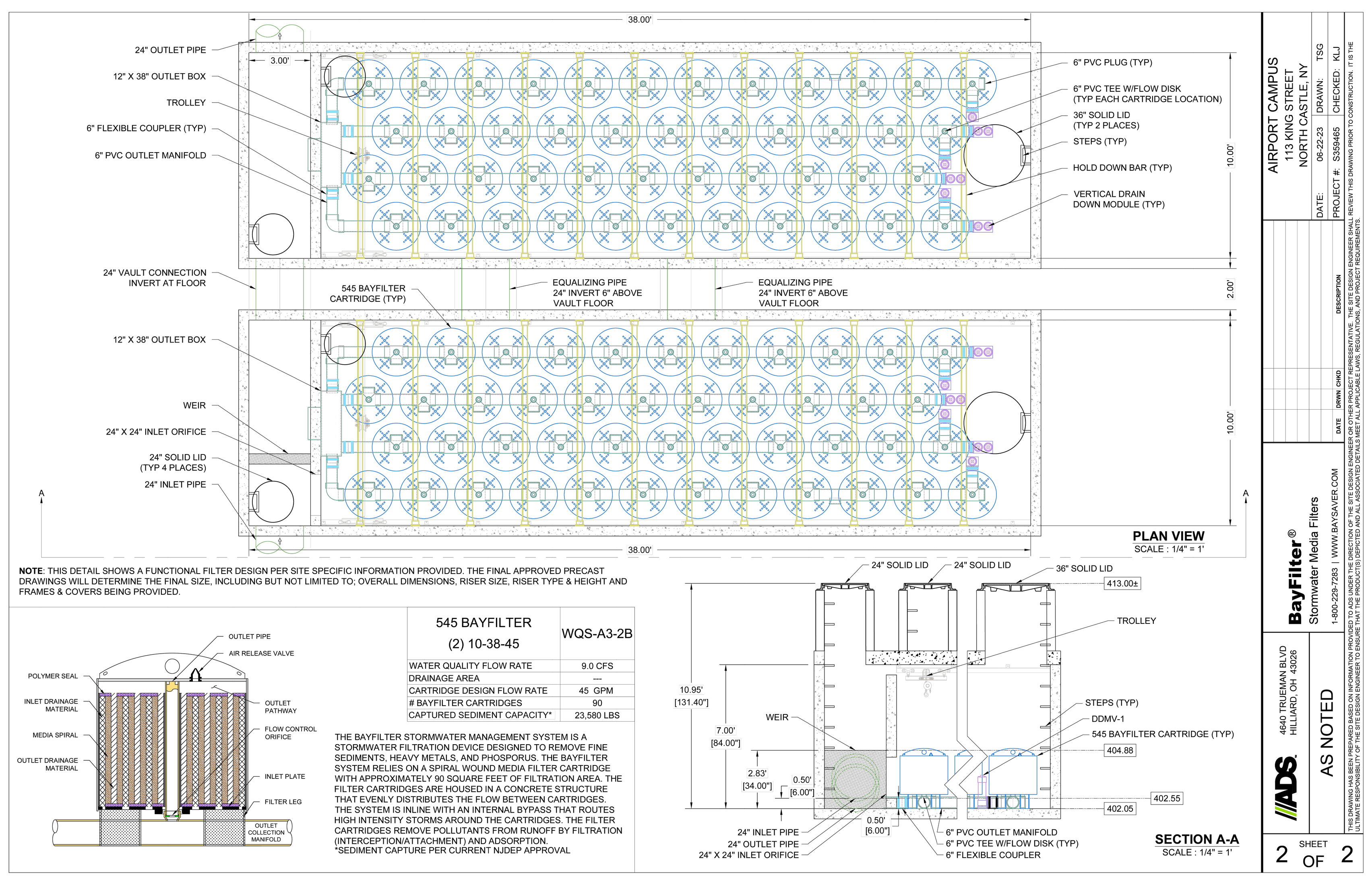

NOTE: THIS DETAIL SHOWS A FUNCTIONAL FILTER DESIGN PER SITE SPECIFIC INFORMATION PROVIDED. THE FINAL APPROVED PRECAST DRAWINGS WILL DETERMINE THE FINAL SIZE, INCLUDING BUT NOT LIMITED TO; OVERALL DIMENSIONS, RISER SIZE, RISER TYPE & HEIGHT AND FRAMES & COVERS BEING PROVIDED.

545 BAYFILTER (2) 10-38-45	WQS-A3-2B
WATER QUALITY FLOW RATE	9.0 CFS
DRAINAGE AREA	---
CARTRIDGE DESIGN FLOW RATE	45 GPM
# BAYFILTER CARTRIDGES	90
CAPTURED SEDIMENT CAPACITY*	23,580 LBS

THE BAYFILTER STORMWATER MANAGEMENT SYSTEM IS A STORMWATER FILTRATION DEVICE DESIGNED TO REMOVE FINE SEDIMENTS, HEAVY METALS, AND PHOSPORUS. THE BAYFILTER SYSTEM RELIES ON A SPIRAL WOUND MEDIA FILTER CARTRIDGE WITH APPROXIMATELY 90 SQUARE FEET OF FILTRATION AREA. THE FILTER CARTRIDGES ARE HOUSED IN A CONCRETE STRUCTURE THAT EVENLY DISTRIBUTES THE FLOW BETWEEN CARTRIDGES. THE SYSTEM IS INLINE WITH AN INTERNAL BYPASS THAT ROUTES HIGH INTENSITY STORMS AROUND THE CARTRIDGES. THE FILTER CARTRIDGES REMOVE POLLUTANTS FROM RUNOFF BY FILTRATION (INTERCEPTION/ATTACHMENT) AND ADSORPTION.
*SEDIMENT CAPTURE PER CURRENT NJDEP APPROVAL

BAYFILTER 26

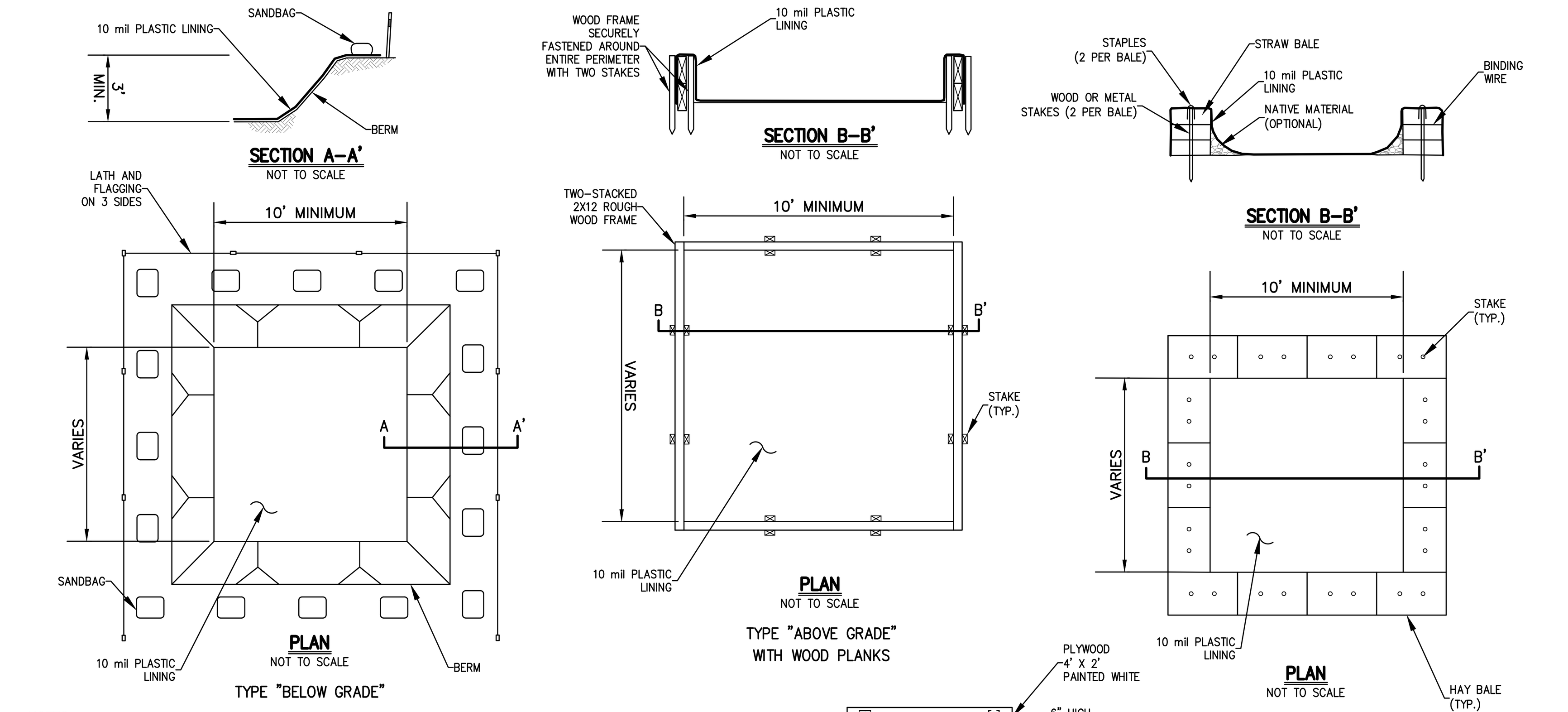

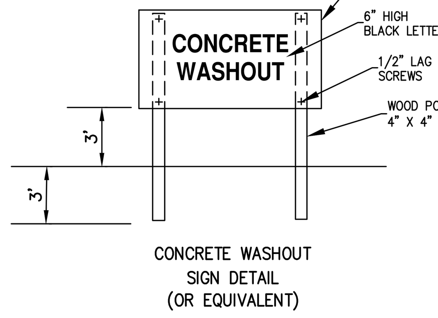

NOTES:

1. ACTUAL LAYOUT DETERMINED IN THE FIELD.
2. LOCATE WASHOUT AREA AT LEAST 50 FEET FROM SENSITIVE AREAS SUCH AS STORM DRAINS, OPEN DITCHES, OR WATER BODIES, INCLUDING WETLANDS.
3. THE CONSTRUCTION STORMWATER GENERAL PERMIT DOES NOT ALLOW OPERATORS TO DISCHARGE CONCRETE WASH WATER TO WATERWAYS, STORM DRAINS OR GROUNDWATER. OPERATORS MUST MANAGE AND CONTAIN THIS WATER TO PREVENT SPILLS, LEAKS OR DISCHARGES. DO NOT USE SANITARY SEWER WITHOUT LOCAL APPROVAL.
4. WASHOUT FACILITIES SHALL BE SIZED TO CONTAIN ALL LIQUIDS AND CONCRETE WASTE GENERATED BY WASHOUT OPERATIONS. APPROXIMATELY 7 GALLONS OF WASH WATER ARE USED TO WASH ONE TRUCK CHUTE AND APPROXIMATELY 50 GALLONS OF WASH WATER ARE USED TO WASH OUT THE HOPPER OF A CONCRETE PUMP TRUCK.
5. WASHOUT FACILITIES SHALL BE MAINTAINED TO PROVIDE ADEQUATE HOLDING CAPACITY WITH A MINIMUM FREEBOARD OF 12 INCHES.
6. THE CONCRETE WASHOUT SIGN (SEE PAGE 6) SHALL BE INSTALLED WITHIN 30 FEET OF THE TEMPORARY CONCRETE WASHOUT FACILITY. A SIGN SHOULD BE INSTALLED ADJACENT TO EACH CONCRETE WASHOUT FACILITY.
7. THE FACILITY NEEDS TO BE INSPECTED DAILY TO ENSURE PLASTIC LININGS ARE STILL INTACT AND SIDEWALLS ARE NOT DAMAGED.
8. THE FACILITY NEEDS TO BE CLEANED OR CHANGED WHEN 75% FULL.
9. IF THE WASHOUT IS NEARING CAPACITY, VACUUM AND DISPOSE OF THE WASTE MATERIAL IN AN APPROVED MANNER AND INSTALL A NEW PLASTIC LINING AFTER EVERY CLEANING.
10. PLACE A SECURE, NON-COLLAPSING, NON-WATER COLLECTING COVER OVER THE CONCRETE WASHOUT FACILITY PRIOR TO PREDICTED WET WEATHER.

CONCRETE WASHOUT 27

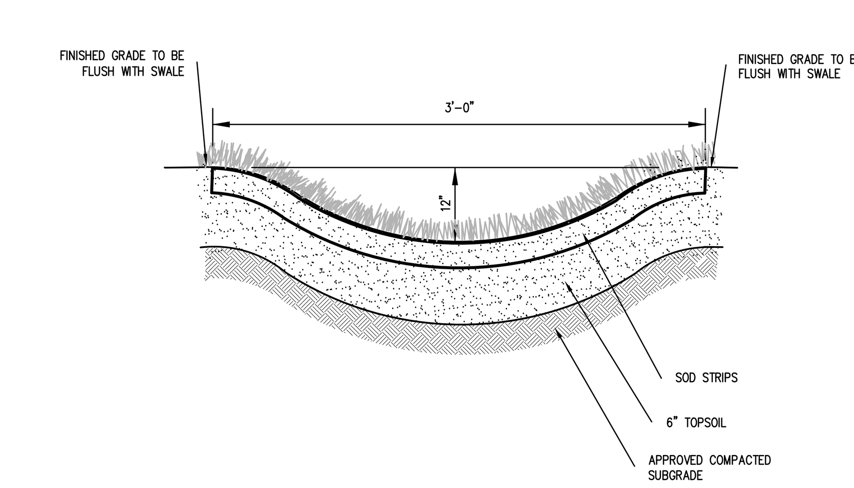

NOTES

1. IMMEDIATELY AFTER GRADING OPERATIONS, THE GRASS SWALE SHALL BE STABILIZED WITH SOD CONTAINING A MIXTURE OF 50% KENTUCKY BLUEGRASS, 25% CREEPING RED FESCUE AND 25% PERENNIAL RYEGRASS. SOD SHALL BE CUT IN UNIFORM WIDTH STRIPS OF LIVE GRASS.
2. FOR SWALE SLOPES EXCEEDING 8%, JUTE MESH SHALL BE UTILIZED TO STABILIZE THE SWALE BASE.
3. AREA ADJACENT TO SWALE TO BE BROUGHT TO FINISHED GRADE IMMEDIATELY AS REQUIRED.

GRASS SWALE 28

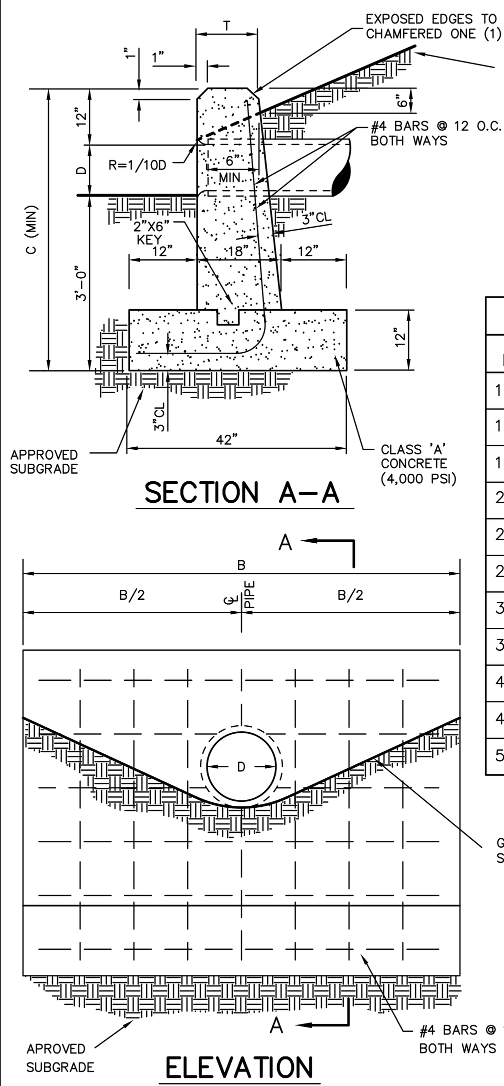

			1.5:1 SLOPE	2:1 SLOPE	3:1 SLOPE
D	C MIN.	T	B	B	B
12"	5'–0"	8"	5'–0"	6'–0"	7'–0"
15"	5'–3"	8"	5'–6"	7'–0"	8'–9"
18"	5'–6"	8"	6'–0"	8'–0"	10'–6"
21"	5'–9"	10"	7'–0"	9'–0"	12'–3"
24"	6'–0"	10"	8'–0"	10'–0"	14'–0"
27"	6'–3"	12"	8'–6"	11'–0"	15'–9"
30"	6'–6"	12"	9'–0"	12'–0"	17'–6"
36"	7'–0"	12"	10'–6"	13'–6"	19'–6"
42"	7'–6"	12"	12'–0"	15'–0"	22'–6"
48"	8'–0"	12"	13'–6"	16'–6"	25'–6"
54"	8'–6"	12"	15'–0"	18'–0"	28'–6"

NOTE A
GROUND SLOPE TO BE 3 HORIZONTAL TO 1 VERTICAL UNLESS OTHERWISE SPECIFIED (SEE CHART)

STRAIGHT CONCRETE HEADWALL 29

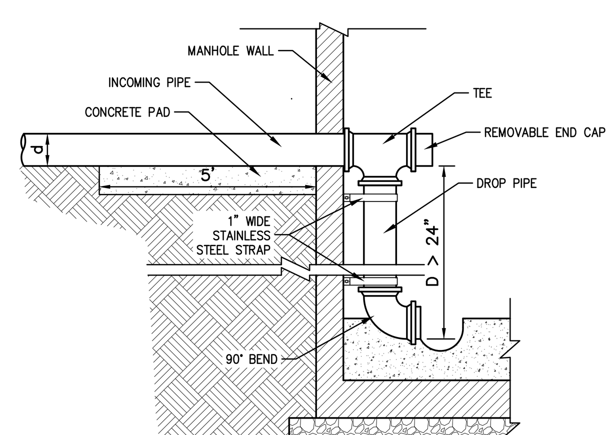

INTERNAL DROP CONNECTION 30
(SANITARY SEWER – TEE)

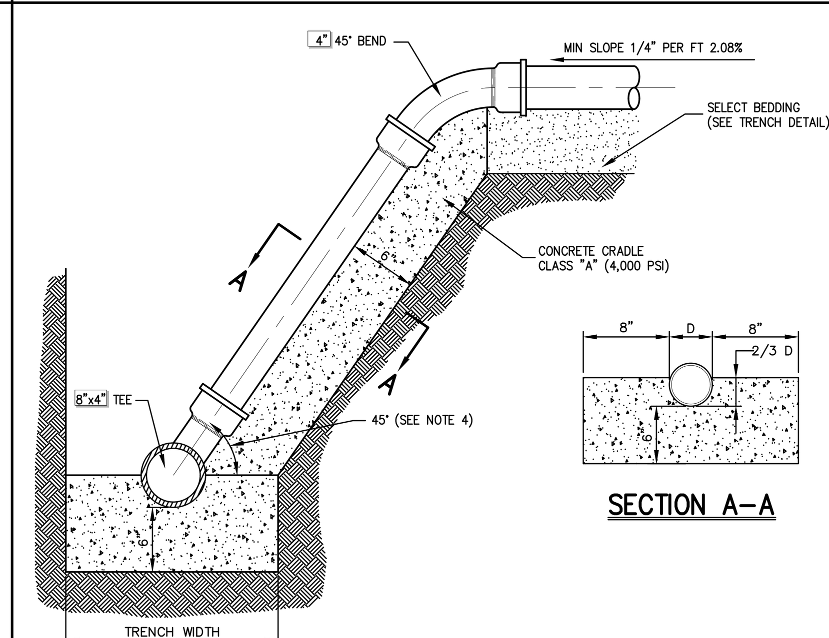

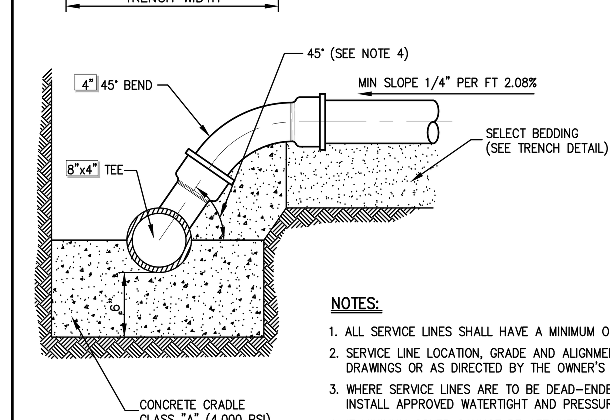

NOTES:

1. ALL SERVICE LINES SHALL HAVE A MINIMUM OF FOUR (4) FEET OF COVER.
2. SERVICE LINE LOCATION, GRADE AND ALIGNMENT SHALL BE AS SHOWN ON DRAWINGS OR AS DIRECTED BY THE OWNER'S FIELD REPRESENTATIVE.
3. WHERE SERVICE LINES ARE TO BE DEAD-ENDED, CONTRACTOR SHALL INSTALL APPROVED WATERTIGHT AND PRESSURE-TIGHT PLUGS.
4. IF MINIMUM COVER CANNOT BE ATTAINED WHILE MAINTAINING MINIMUM SLOPE, THE ANGLE OF CONNECTION MAY BE REDUCED TO 22.5°, IF APPROVED BY THE OWNER'S FIELD REPRESENTATIVE AND GOVERNING BODY WITH JURISDICTION.
5. SANITARY SEWER SERVICE LINE INCLUDING FITTINGS SHALL BE PVC, SDR 35.

2. PIPE SIZE OF DROP CONNECTION SHALL BE THE SAME SIZE AS LATERAL WITH 6" MINIMUM DIAMETER.

SANITARY SEWER SERVICE CONNECTION 31

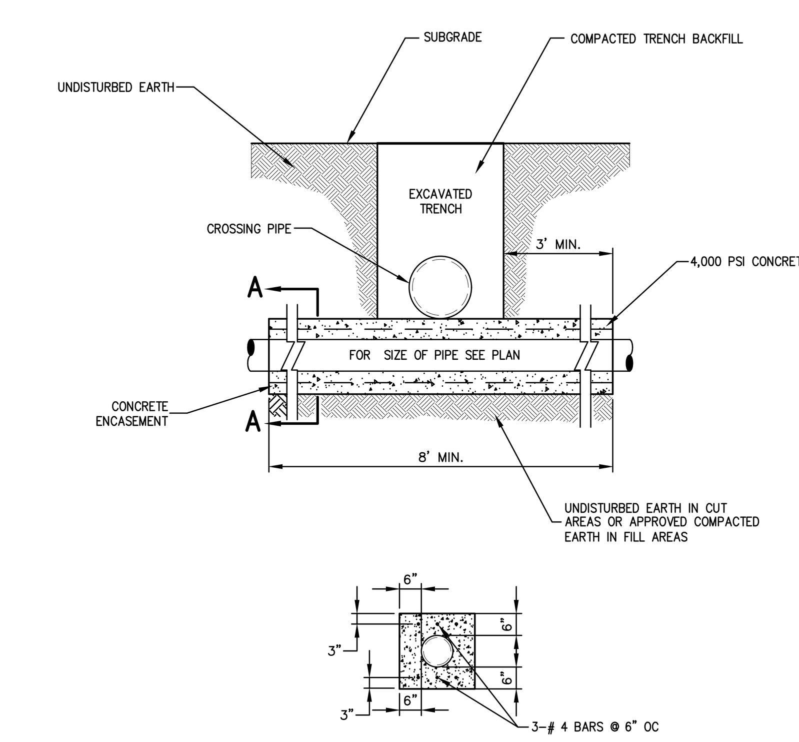

NOTE:

1. FULL LENGTH OF PIPE TO BE USED AT CROSSING. PIPE TO BE CENTERED ON CENTERLINE OF CROSSING PIPE. NO JOINTS SHALL BE LOCATED. WITHIN THE AREA OF CONCRETE ENCASEMENT.

CONCRETE ENCASEMENT 32

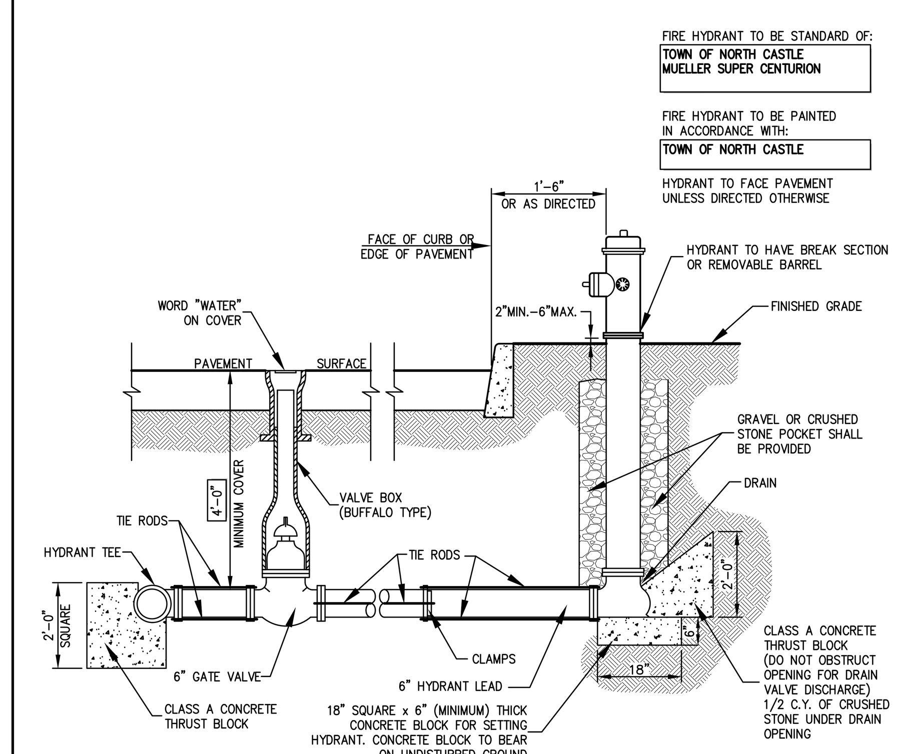

NOTES:

1. ALL CONCRETE THRUST BLOCKS SHALL BEAR ON UNDISTURBED GROUND.
2. RODDING SHALL CONSIST OF TWO 3/4" THREADED STEEL TIE RODS WITH NUTS AND WASHERS COMPLETE WITH ALL NECESSARY AND REQUIRED CLAMPS, CAREFULLY AND THOROUGHLY COVERED WITH ASPHALT OR OTHER ACCEPTABLE CORROSIVE RETARDING MATERIAL. IN GENERAL, THE METHOD AND TYPES OF MATERIAL REQUIRED IN THE INSTALLATION OF CLAMPS AND THE RODS SHALL BE IN ACCORDANCE WITH THE LATEST NATIONAL FIRE PROTECTION STANDARDS.
3. HYDRANT DRAINS SHALL NOT BE CONNECTED TO OR WITHIN TEN (10) FEET OF SANITARY SEWERS OR STORM DRAINS.
4. IF GROUND WATER IS FOUND WITHIN SEVEN (7) FEET OF THE SURFACE, HYDRANT DRAINS ARE TO BE PLUGGED. WHEN DRAINS ARE TO BE PLUGGED, THE BARRELS MUST BE PUMPED DRY AFTER USE DURING FREEZING WEATHER. SUCH HYDRANTS SHALL BE IDENTIFIED WITH A VISIBLE MARKING AS APPROVED BY THE WATER AUTHORITY.

HYDRANT INSTALLATION 33

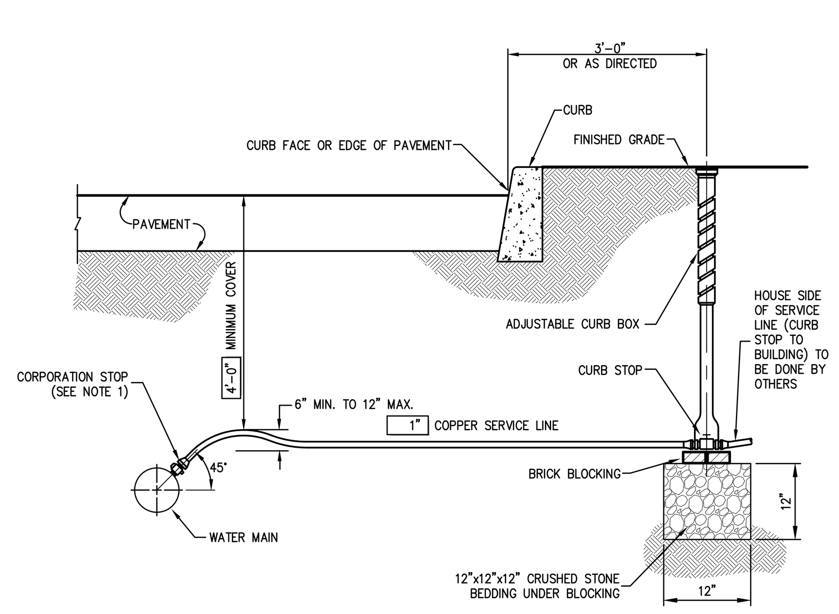

SERVICE LINE REQUIREMENTS

SIZE	SERVICE LINE(MATERIALS)	CORPORATION STOP	CURB STOP	CURB BOX	ENLARGED BASE
3/4"	COPPER, TYPE K	H–15008 N	H–15214 N	H–10308	Not Applicable
1"	COPPER, TYPE K	H–15008 N	H–15214 N	H–10308	Not Applicable
1–1/2"	COPPER, TYPE K	H–15013 N	H–15214 N	H–10310	Not Applicable
2"	COPPER, TYPE K	H–15013 N	H–15214 N	H–10310	H–10349

NOTES:

1. INSTALLATION OF 1–1/2" AND 2" CORPORATION STOPS SHALL BE MADE IN THE UPPER PIPE QUADRANT, BUT MAY BE MADE AT ANGLES LESS THAN 45° IF APPROVED BY THE OWNER'S FIELD REPRESENTATIVE.
2. SERVICE LINE SHALL HAVE NO JOINTS BETWEEN THE WATER MAIN AND CURB STOP.
3. CORPORATION STOP, CURB STOP, CURB BOX AND ENLARGED BASE FOR CURB BOX SHALL BE MUELLER COMPANY OR APPROVED EQUAL. CATALOG NUMBERS SHOWN REFER TO MUELLER COMPANY.
4. ALL SERVICE BRASS SHALL COMPLY WITH AWWA C–800. COMPONENTS IN CONTACT WITH POTABLE WATER SHALL ALSO COMPLY WITH LATEST REQUIREMENTS OF THE FEDERAL SAFE DRINKING WATER ACT.

WATER SERVICE CONNECTION 34
(2" OR LESS)

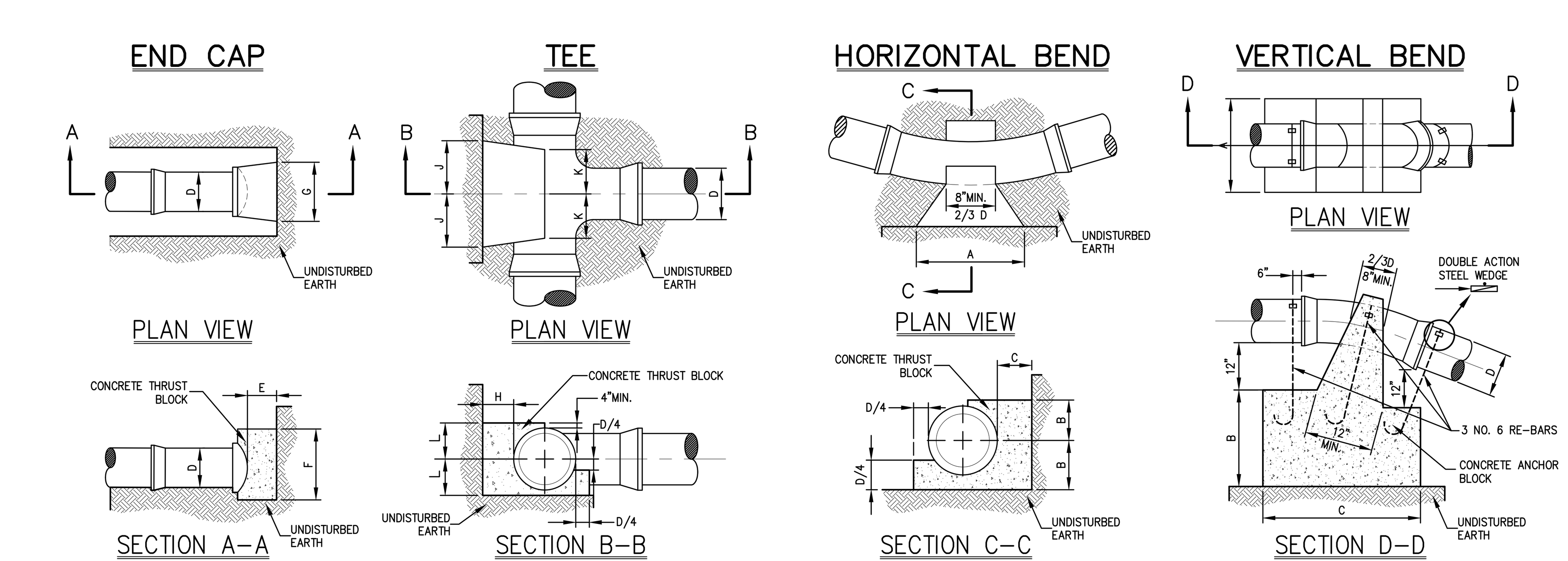

END CAP CHART

D	4"	6"	8"	10"	12"
E	6"	6"	8"	8"	10"
F	12"	12"	1'–4"	1'–8"	2'–0"
G	1'–5"	1'–5"	2'–0"	2'–5"	3'–0"

TEE CHART

D	4"	6"	8"	10"	12"
H	6"	7"	9"	10"	12"
L	8"	8"	10"	12"	1'–3"
J	7"	7"	9"	12"	1'–2"
K	6"	6"	8"	8"	6"

HORIZONTAL BEND CHART

BEND (DEGREES)		DIAMETER (D) 4"	6"	8"	10"	12"
1/32 (11¼°)	A	8"	8"	8"	10"	12"
	B	7"	7"	8"	9"	10"
	C	7"	7"	7"	8"	8"
1/16 (22½°)	A	9"	9"	12"	1'–6"	1'–9"
	B	7"	7"	8"	9"	10"
	C	8"	8"	9"	10"	11"
1/8 (45°)	A	1'–3"	1'–3"	1'–8"	2'–1"	2'–6"
	B	7"	7"	8"	9"	11"
	C	8"	8"	9"	10"	11"
1/4 (90°)	A	2'–0"	2'–0"	2'–6"	3'–0"	3'–6"
	B	7"	7"	9"	12"	1'–3"
	C	2'–0"	2'–0"	1'–9"	1'–8"	1'–7"

VERTICAL BEND CHART

BEND (DEGREES)		DIAMETER (D) 4"	6"	8"	10"	12"	16"
1/32 (11¼°)	A	1'–6"	1'–6"	2'–0"	2'–6"	3'–0"	3'–6"
	B	1'–3"	1'–3"	1'–9"	1'–3"	2'–0"	2'–0"
	C	2'–0"	2'–0"	2'–6"	2'–9"	3'–0"	4'–0"
1/16 (22½°)	A	2'–0"	2'–0"	3'–4"	3'–8"	4'–0"	4'–4"
	B	1'–9"	1'–9"	2'–3"	2'–6"	2'–6"	2'–6"
	C	2'–6"	2'–6"	2'–8"	4'–0"	4'–0"	5'–6"
1/8 (45°)	A	2'–6"	2'–6"	3'–0"	4'–0"	4'–6"	5'–2"
	B	2'–6"	2'–6"	2'–9"	3'–0"	3'–6"	4'–0"
	C	3'–0"	3'–0"	4'–0"	4'–6"	4'–9"	6'–6"

NOTES:

1. ALL CONCRETE TO BE CLASS A (4,000 PSI).
2. ALL DIMENSIONS ARE MINIMUMS; ALL ANCHOR AND THRUST BLOCKS SHALL BEAR ON UNDISTURBED EARTH.
3. IN ALL CASES SHOWN, MEASUREMENT "D" REFERS TO THE INSIDE PIPE DIAMETER.
4. ANCHOR AND THRUST BLOCK DIMENSIONS SHOWN ARE MINIMUM FOR 100 PSI WATER PRESSURE AND SOIL RESISTANCE OF 2 KIPS PER SQ FT. CONTRACTOR SHALL ADJUST FOR OTHER CONDITIONS AND SUBMIT FOR APPROVAL.
5. IF THE OWNER OF THE WATER SYSTEM REQUIRES A METHOD THAT RESTRAINS INDIVIDUAL JOINTS, EACH JOINT THAT FALLS WITHIN THE MINIMUM RESTRAINED LENGTH, MEASURED FROM THE CENTER OF THE FITTING, AS SHOWN ON THESE SHEETS SHALL BE RESTRAINED, AND SHALL WITHSTAND THE MAXIMUM PRESSURE APPLIED TO THE SYSTEM.
6. CLASS A CONCRETE SHALL NOT BE PLACED UNDER WATER. THE CONTRACTOR SHALL DEWATER THE EXCAVATION OR PLACE TYPE G CONCRETE USING APPROPRIATE UNDERWATER PLACEMENT TECHNIQUES.
7. CONCRETE FOR THRUST BLOCKS SHALL NOT BE ALLOWED TO COVER OR INTERFERE WITH JOINT OR RESTRAINT HARDWARE, PLASTIC SHEETING OR BUILDING FELT MAY BE PLACED OVER PIPE OR FITTINGS TO PREVENT CONCRETE FROM ADHERING TO SURFACES.
8. FOR BENDS, BEARING AREA SHALL BE PARALLEL TO THE EDGE OF THE FITTING AT THE FITTING MIDPOINT.
9. FOR TEES, BEARING AREA SHALL BE PERPENDICULAR TO THE BRANCH (SINGLE LEG) AXIS.
10. FOR REDUCERS, BEARING AREA SHALL BE PERPENDICULAR TO THE FITTING AXIS. THE MINIMUM THICKNESS ALONG THE FITTING AXIS SHALL BE 1'–0" OR THE LENGTH BETWEEN THE BELLS, WHICHEVER IS SMALLER.
11. THRUST RESTRAINTS FOR SIZES OR FITTINGS NOT SHOWN ON THESE SHEETS WILL BE DESIGNED ON A CASE BY CASE BASIS, AND WILL BE SHOWN IN THE CONTRACT DOCUMENTS.

ANCHOR AND THRUST BLOCKS 35

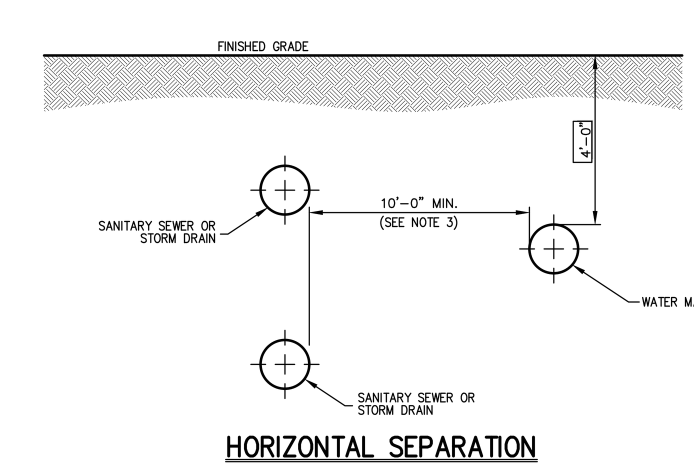

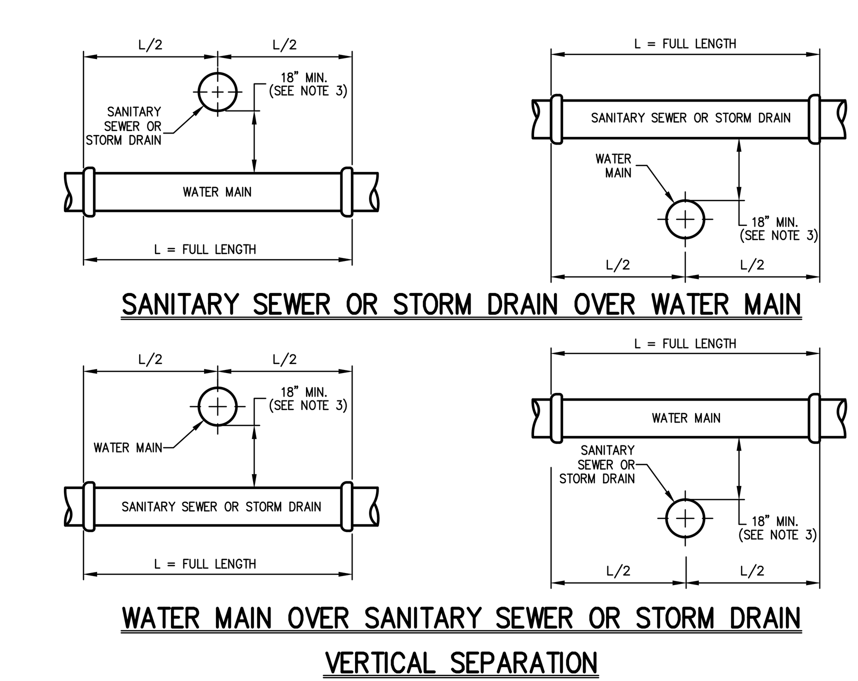

NOTES:

1. NORMAL CONDITIONS:
   A. WHENEVER A WATER MAIN MUST CROSS OVER OR UNDER A SANITARY SEWER OR STORM DRAIN, THE PIPES SHALL BE LAID TO PROVIDE A VERTICAL SEPARATION BETWEEN THEM OF AT LEAST 18 INCHES, AS MEASURED FROM THE BOTTOM OF THE HIGHER PIPE TO THE CROWN OF THE LOWER PIPE.
   B. FULL LENGTH OF WATER PIPE MUST BE CENTERED AT THE POINT OF CROSSING; NO JOINTS WILL BE PERMITTED AT THE POINT OF CROSSING.
2. WATER MAIN CROSSING UNDER SANITARY SEWERS:
   A. VERTICAL SEPARATION OF 18 INCHES MUST BE PROVIDED.
   B. ADEQUATE STRUCTURAL SUPPORT MUST BE PROVIDED FOR THE SANITARY SEWER TO PREVENT EXCESSIVE DEFLECTION OF JOINTS AND SETTLING.
   C. FULL LENGTH OF WATER PIPE MUST BE CENTERED AT THE POINT OF CROSSING; NO JOINTS WILL BE PERMITTED AT THE POINT OF CROSSING.
3. IF DURING CONSTRUCTION IT IS FOUND THAT THE REQUIRED SEPARATION OF WATER MAINS, SANITARY SEWERS, STORM SEWERS AND BUILDING SANITARY SEWERS CANNOT BE MET, THE CONTRACTOR OR HIS AUTHORIZED REPRESENTATIVE SHALL IN WRITING ADVISE JOHN MEYER CONSULTING OF THE SPECIFIC CONDITIONS ENCOUNTERED. APPROVAL OF ALTERNATIVE SEPARATION CRITERIA SHALL BE OBTAINED FROM THE WCDOH PRIOR TO INSTALLATION.

SEPARATION OF WATER AND SANITARY SEWER/STORM DRAIN LINES 36

APPROVED BY TOWN OF NORTH CASTLE PLANNING BOARD RESOLUTION, DATED ____

CHRISTOPHER CARTHY, CHAIRMAN, TOWN OF NORTH CASTLE PLANNING BOARD — DATE:

ENGINEERING PLANS REVIEWED FOR CONFORMANCE TO RESOLUTION

JOSEPH M. CERMELE, PE
KSCJ CONSULTING
CONSULTING TOWN ENGINEERS — DATE:

No.	Revision	Date	By
1.	PLANNING BOARD SUBMISSION	10/06/2023	BMS
2.	PLANNING BOARD RESUBMISSION	11/10/2023	BMS
3.	PLANNING BOARD RESUBMISSION	12/21/2023	BMS

Previous Editions Obsolete

APPLICANT:
AIRPORT CAMPUS I–V LLC
46 WESTCHESTER AVENUE
POUND RIDGE, NY 10576

ARCHITECT:
LESSARD DESIGN
8521 LEESBURG PIKE, 7TH FLOOR
VIENNA, VA 22182

JMC Planning, Engineering, Landscape Architecture & Land Surveying, PLLC
JMC Site Development Consultants, LLC
John Meyer Consulting, Inc.
120 BEDFORD ROAD • ARMONK, NY 10504
voice 914.273.5225 • fax 914.273.2102
www.jmcpllc.com
JMC

CONSTRUCTION DETAILS

AIRPORT CAMPUS
113 KING STREET (NY ROUTE 120)
NORTH CASTLE, NY 10504

ANY ALTERATION OF PLANS, SPECIFICATIONS, PLATS AND REPORTS BEARING THE SEAL OF A LICENSED PROFESSIONAL ENGINEER OR LICENSED LAND SURVEYOR IS A VIOLATION OF ARTICLE 145 OF THE NEW YORK STATE EDUCATION LAW, EXCEPT AS PROVIDED FOR BY SECTION 7209, SUBSECTION 2.

STATE OF NEW YORK · DAVID P. LOMBARDI · 071001 · LICENSED PROFESSIONAL ENGINEER

Drawn: BMS	Approved: AG
Scale: NOT TO SCALE	
Date: 10/06/2023	
Project No: 15072	
15072-DETAILS	C-902
Drawing No: C–902	

COPYRIGHT © 2023 by JMC All Rights Reserved. No part of this document may be reproduced, stored in a retrieval system, or transmitted in any form or by means, electronic, mechanical, photocopying, recording or otherwise, without the prior written permission of JMC PLANNING, ENGINEERING, LANDSCAPE ARCHITECTURE & LAND SURVEYING, PLLC | JMC SITE DEVELOPMENT CONSULTANTS, LLC | JOHN MEYER CONSULTING, INC. (JMC). Any modifications or alterations to this document without the written permission of JMC shall render them invalid and unusable.
NOT FOR CONSTRUCTION

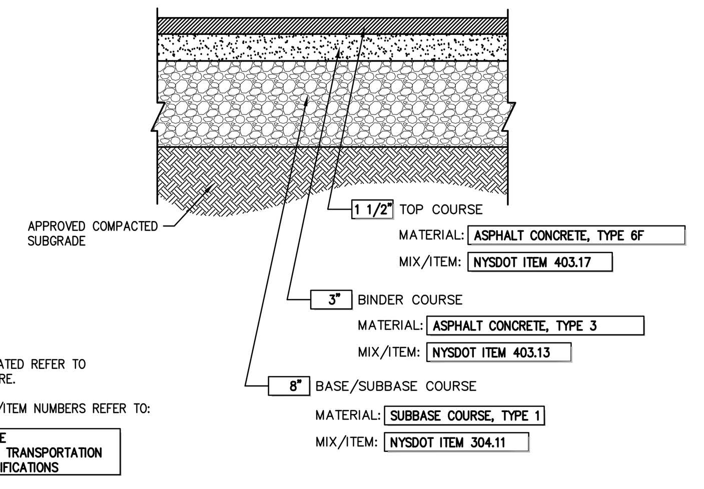

NOTES:

1. THICKNESSES INDICATED REFER TO COMPACTED MEASURE.
2. MATERIAL AND MIX/ITEM NUMBERS REFER TO:

NEW YORK STATE DEPARTMENT OF TRANSPORTATION STANDARD SPECIFICATIONS

SITE PAVEMENT
(Heavy Duty)

37

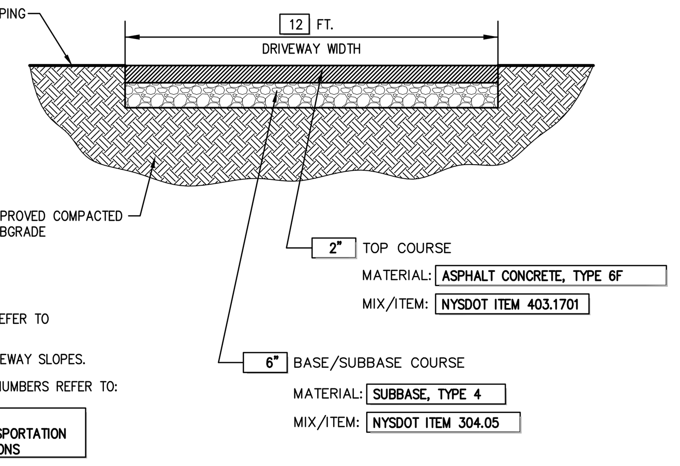

NOTES:

1. THICKNESSES INDICATED REFER TO COMPACTED MEASURES.
2. SEE SITE PLANS FOR DRIVEWAY SLOPES.
3. MATERIAL AND MIX/ITEM NUMBERS REFER TO:

NEW YORK STATE DEPARTMENT OF TRANSPORTATION STANDARD SPECIFICATIONS

STANDARD DRIVEWAY

38

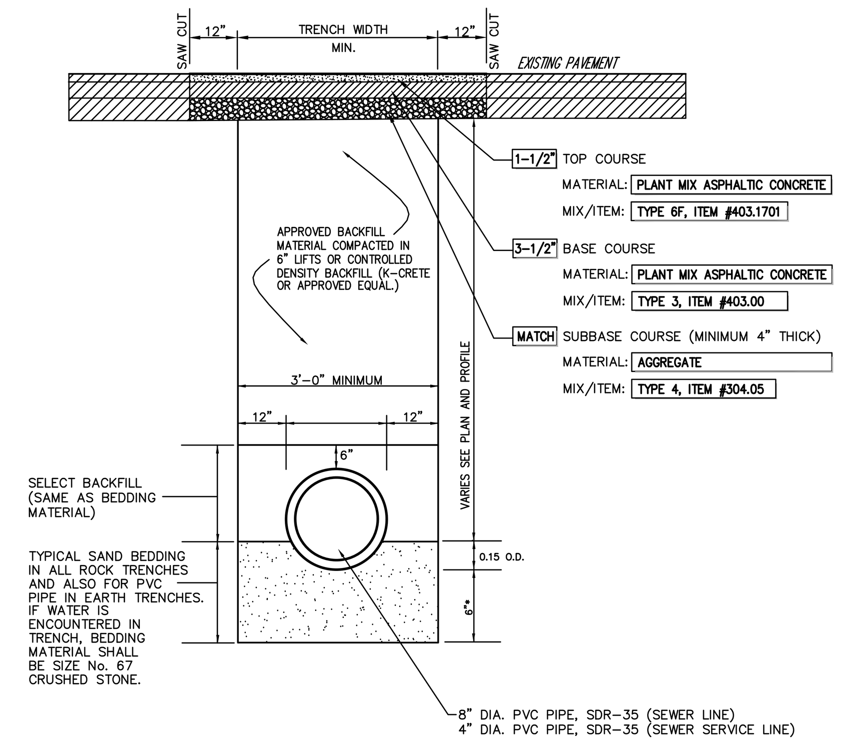

* WHERE ROCK IS ENCOUNTERED IN TRENCH BOTTOM, UNDERCUT MINIMUM OF 6"

* WHERE UNSUITABLE MATERIAL IS ENCOUNTERED IN TRENCH BOTTOM, UNDERCUT AS DIRECTED BY OWNER'S FIELD REPRESENTATIVE.

NOTES

1. THICKNESS INDICATED REFERS TO COMPACTED MEASURE.

TRENCH PAVEMENT REPLACEMENT

39

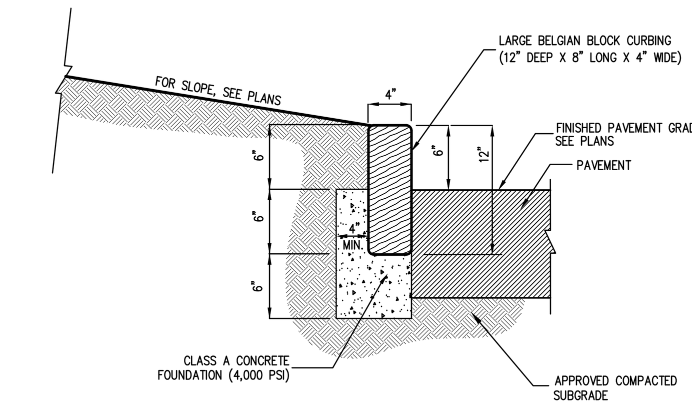

NOTES

1. JOINTS SHALL BE NO WIDER THAN 3/4" AND SHALL BE MORTARED. JOINTS SHALL BE FULLY FILLED WITH 1:2 CEMENT MORTAR, NEATLY POINTED AND CLEANED OF EXCESS MORTAR.

STONE CURB
(BELGIAN BLOCK)

40

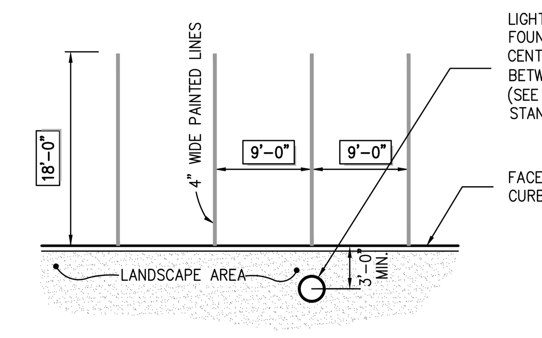

NOTE

1. COLOR OF PAINT SHALL BE WHITE

90° PARKING
(SINGLE STRIPING – CURBED PERIMETER)

41

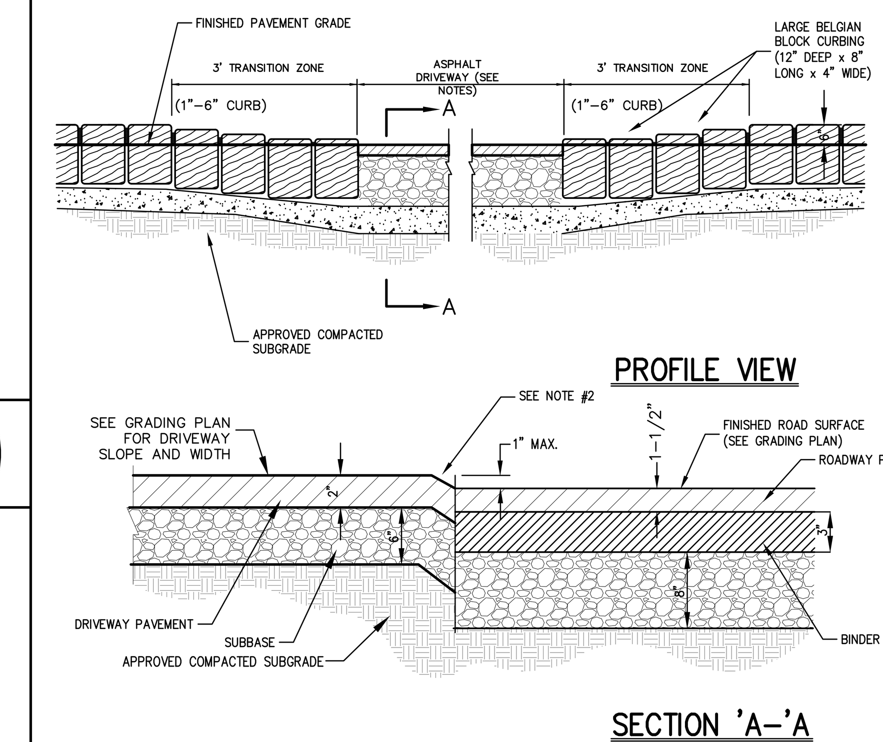

NOTES:

1. BELGIAN BLOCK CURB TO END AT EDGE OF DRIVEWAY (SEE LAYOUT PLAN)
2. PROVIDE 1" LIP WHERE DRIVEWAY MEETS ROAD WITH 30 DEGREE PAVEMENT CHAMFER

STONE CURB TRANSITION
(AT DRIVEWAYS)

42

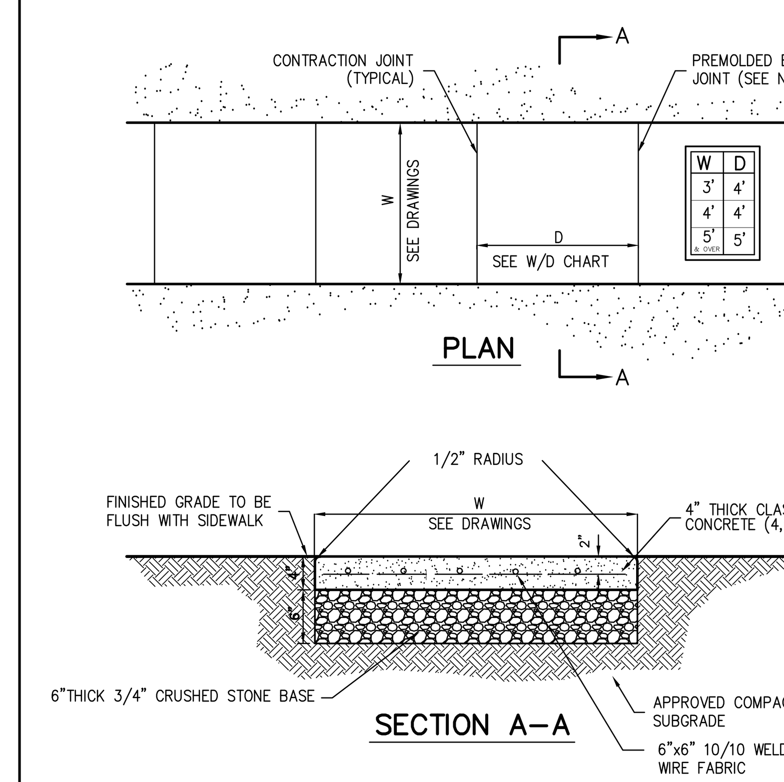

NOTES:

1. SIDEWALK CROSS SLOPE SHALL BE 1% MIN. TO 2% MAX.
2. PROVIDE 1/2" PREMOLDED EXPANSION JOINTS AT 20' INTERVALS UNLESS OTHERWISE DIRECTED.
3. REINFORCING SHALL NOT EXTEND THROUGH EXPANSION JOINTS.
4. SIDEWALK SHALL HAVE LIGHT BROOM FINISH

CONCRETE SIDEWALK

43

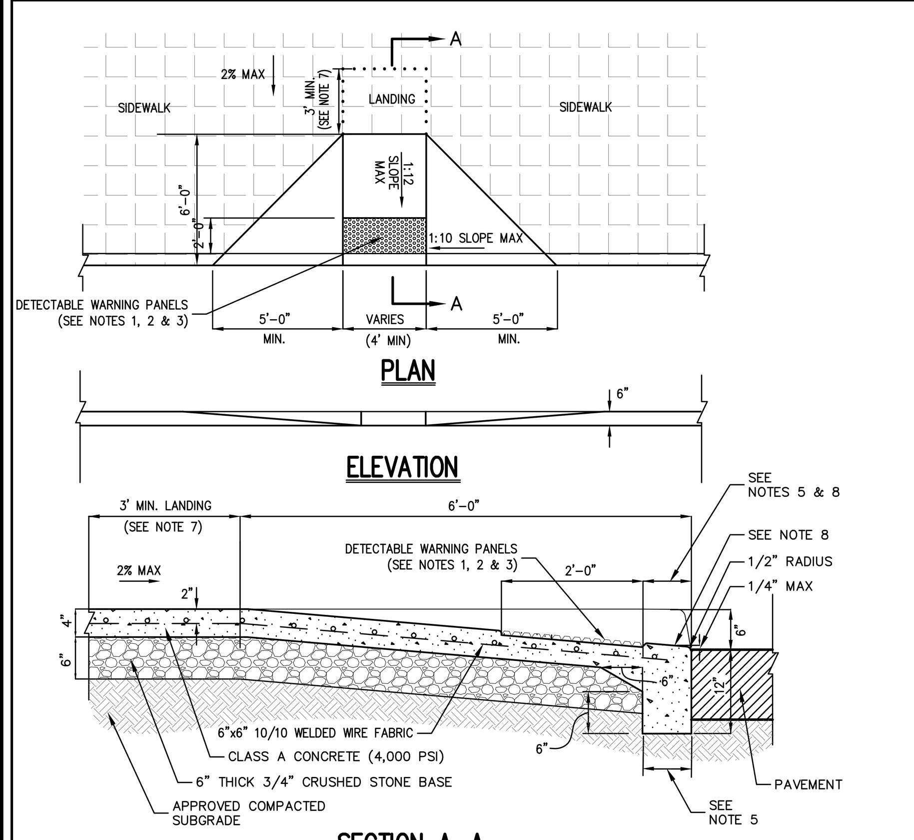

NOTES:

1. RAMPS SHALL HAVE CAST IN PLACE DETECTABLE/TACTILE WARNING SURFACE TILES AS MANUFACTURED BY ARMOR-TILE (OR APPROVED EQUAL) AND SHALL CONSIST OF RAISED TRUNCATED DOMES WITH A DIAMETER OF NOMINAL 0.9 INCHES, A HEIGHT OF NOMINAL 0.2 INCHES AND A CENTER TO CENTER SPACING OF NOMINAL 2.35 INCHES.
2. DETECTABLE WARNING PANELS SHALL CONTRAST VISUALLY WITH ADJOINING SURFACES, EITHER LIGHT-ON-DARK OR DARK-ON-LIGHT IN ACCORDANCE WITH SECTION 4.29.2, FEDERAL REGISTER, VOLUME 56, NO. 144, RULES AND REGULATIONS, APPENDIX A TO PART 36 – STANDARDS FOR ACCESSIBLE DESIGN (AMERICANS WITH DISABILITIES ACT), LATEST EDITION.
3. 24" WIDTH OF PANELS TO BE INSTALLED DIRECTLY BEHIND CURB AND IN ACCORDANCE WITH MANUFACTURER'S SPECIFICATIONS.
4. A MINIMUM OF 3 FEET CLEAR SHALL BE MAINTAINED AT ANY PERMANENT OBSTACLE IN ACCESSIBLE ROUTE (I.E., HYDRANTS, UTILITY POLES, TREE WELLS, SIGNS, ETC.).
5. CURB TREATMENT VARIES, SEE PLANS FOR CURB TYPE AND SEE CURB DETAIL FOR DIMENSIONS.
6. RAMP, CURB AND ADJACENT PAVEMENTS SHALL BE GRADED TO PREVENT PONDING.
7. WHEN LANDING OF RAMP ADJOINS A DOORWAY THEN THE MINIMUM DOORWAY MANEUVERING AREA SHALL BE AT LEAST THE WIDTH OF THE DOORWAY AND SHALL HAVE A MINIMUM DEPTH OF:
   MANUAL SWING DOORS = 60" MIN.
   FULL POWERED AUTOMATIC SLIDING DOORS = 48" MIN.
8. CONTRACTOR TO ENSURE TOP OF CURB MATCHES SLOPE OF RAMP.

DROP CURB & RAMP (TYPE A)
WITH DETECTABLE WARNING

44

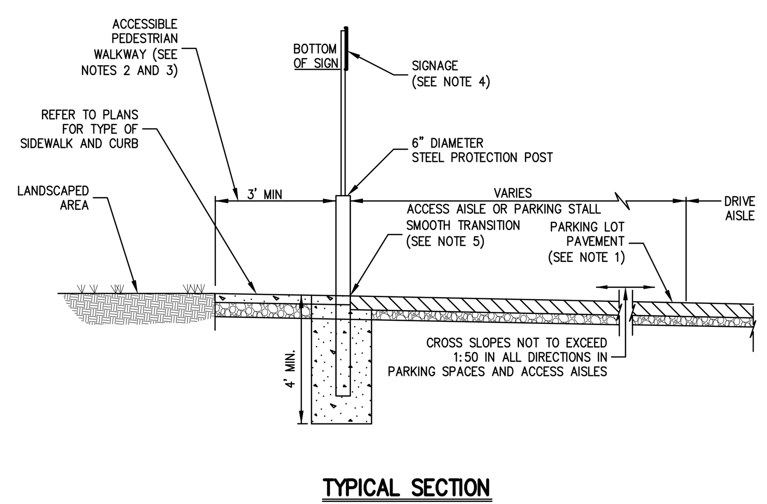

NOTES:

1. THIS SHEET IS INTENDED TO DEPICT THE DIMENSIONAL REQUIREMENTS OF TYPICAL ACCESSIBLE PARKING SPACES. THE SIDEWALK, CURBING, AND PAVEMENT MATERIAL SHALL BE AS SPECIFIED ELSEWHERE IN THE CONTRACT DOCUMENTS.
2. LOCATION – PARKING SPACES FOR USE BY PERSONS WITH DISABILITIES SHALL BE IN THE SPACES CLOSEST TO THE NEAREST ACCESSIBLE BUILDING OR FACILITY ENTRANCE ON AN ACCESSIBLE ROUTE.
3. SURFACE SLOPES – SLOPES AT ACCESSIBLE PARKING SPACES, ACCESS AISLES, AND ADJOINING WALKWAYS SHALL NOT EXCEED 1:50 IN ANY DIRECTION.
4. SIGNAGE – EACH ACCESSIBLE PARKING SPACE SHALL BE MARKED BY PERMANENTLY INSTALLED ABOVE GROUND SIGNS WHICH DISPLAY THE INTERNATIONAL SYMBOL OF ACCESS. EACH ACCESS AISLE SHALL BE MARKED BY PERMANENTLY INSTALLED ABOVE GROUND SIGNS INDICATING THAT PARKING IS NOT PERMITTED IN THE AISLE. SIGNS SHALL NOT BLOCK THE ACCESSIBLE CLEAR WIDTH OF ADJACENT WALKWAYS, SIGNS LOCATED WHERE THEY MAY BE HIT BY VEHICLES BEING PARKED SHALL BE INSTALLED AS SHOWN IN THE PROTECTION POST BASE DETAIL. THE BOTTOMS OF THE SIGNS LOCATED ON POST INSTALLED IN PAVED AREAS SHALL BE AT LEAST 7' ABOVE THE WALKWAY SURFACE. THE BOTTOMS OF SIGNS LOCATED IN UNPAVED AREAS SHALL BE 7' ABOVE THE ADJACENT PAVEMENT SURFACE.
5. A SMOOTH, FLUSH TRANSITION MUST BE PROVIDED BETWEEN ALL PEDESTRIAN WALKWAYS AND THE ACCESSIBLE PARKING SPACES AND AISLES.

TYPICAL ACCESSIBLE PARKING STALL AND AISLE
(TYPE C)

45

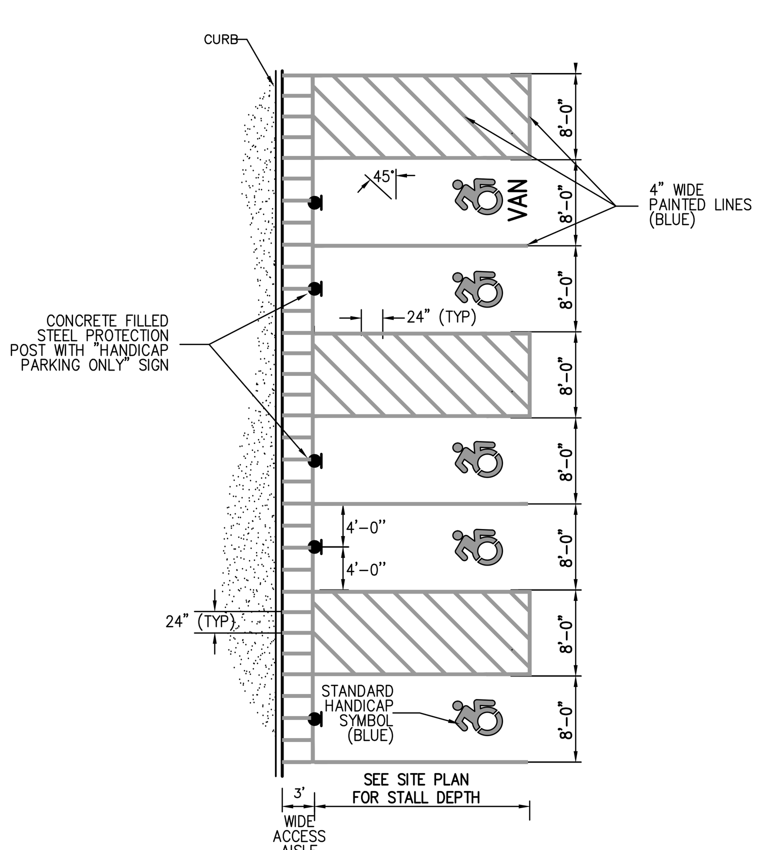

NOTE: SLOPES IN HANDICAP PARKING
1. AREAS SHALL NOT EXCEED 1.5% IN ANY DIRECTION.
2. SEE SITE PLANS / SIGN TABLE FOR SIGN DESIGNATIONS, LOCATORS AND SPECIFICATIONS.

HANDICAP PARKING
(SINGLE STRIPING – CURBLINE ALIGNMENT – W/O SIDEWALK)
(NEW YORK)

46

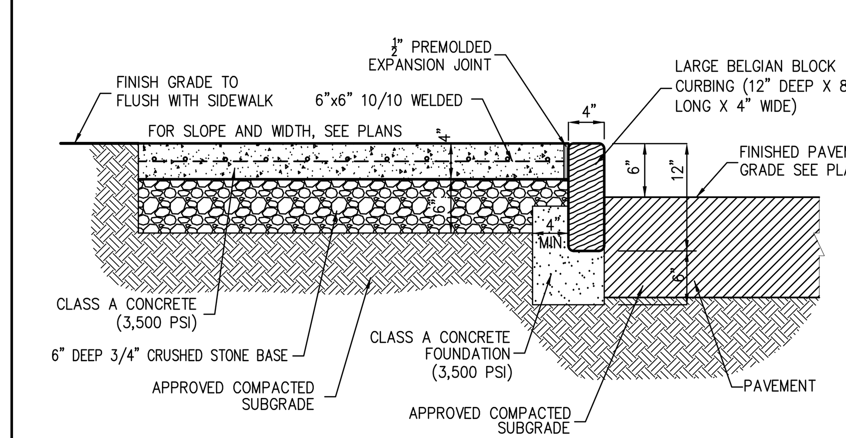

STONE CURB AND SIDEWALK
(BELGIAN BLOCK)

47

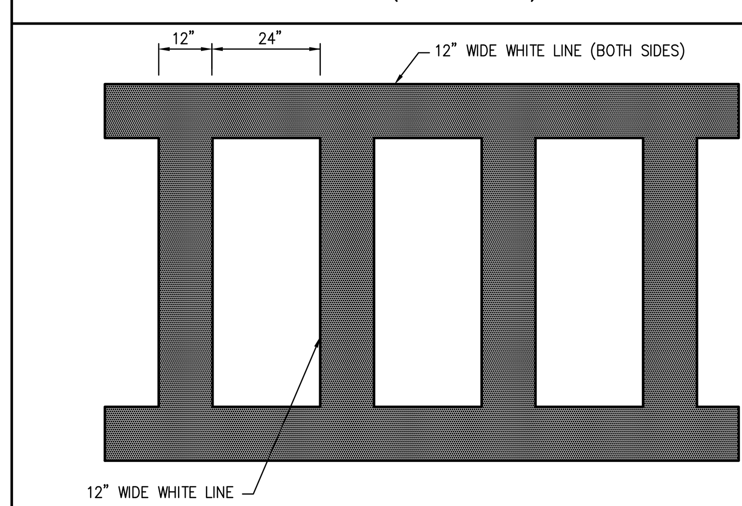

PEDESTRIAN CROSSING

48

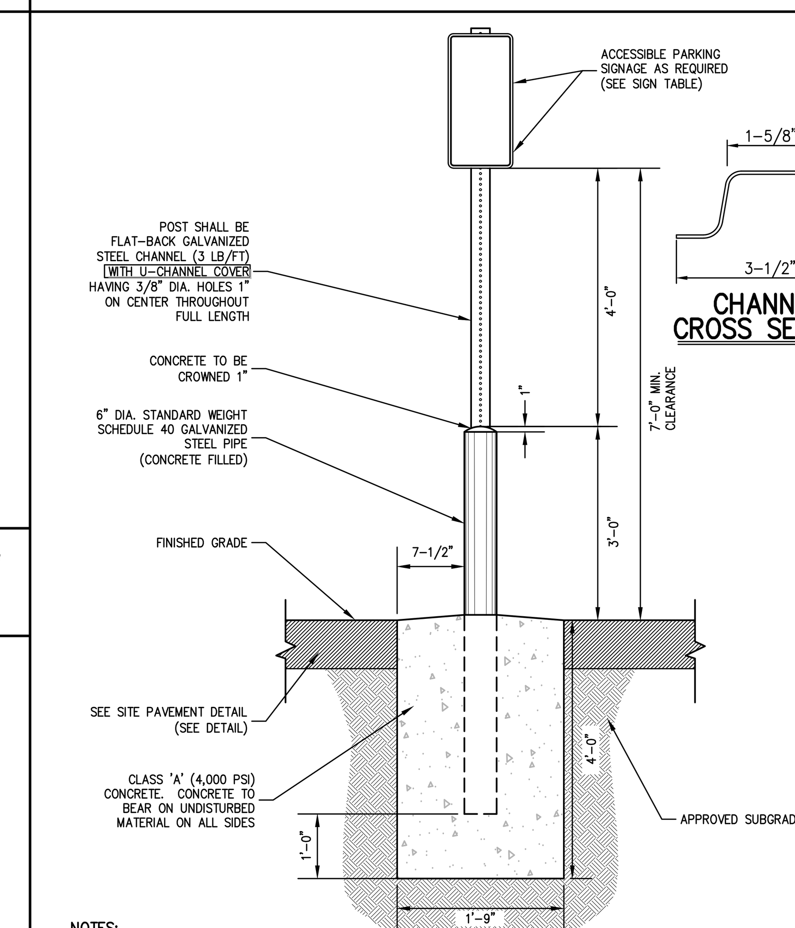

NOTES:

1. GALVANIZED STEEL CHANNEL SHALL BE EMBEDDED A MIN. OF 3 FT. INTO THE CONCRETE
2. POSTS FOR HANDICAP PARKING STALLS AND ACCESS AISLES SHALL BE PAINTED BLUE AS FOLLOWS:
   A. SOLVENT CLEAN TO REMOVE OIL, GREASE AND OTHER CONTAMINANTS.
   B. APPLY METAL PRIMER FOR GALVANIZED SURFACES.
   C. APPLY TWO (2) FINISH COATS OF APPROVED EXTERIOR PAINT FOR METAL SURFACES.
3. CONTRACTOR SHALL BE RESPONSIBLE FOR COORDINATING THE INSTALLATION OF THE PARKING SIGNS, BOLLARDS AND FOUNDATIONS WITH THE DESIGN AND INSTALLATION OF THE SITE SIDEWALKS, CURBING, PAVEMENT AND ANY OTHER SITE FEATURES SHOWN ON THE PLANS.
4. FASTEN SIGN TO POSTS WITH GALVANIZED STEEL BOLTS, LOCK WASHERS, AND NUTS (5/16" DIA.)
5. U-CHANNEL COVERS FOR POSTS SHALL BE BLUE WITH WHITE STRIPE FOR HANDICAP PARKING STALLS AND HANDICAP ACCESS AISLES.

ACCESSIBLE PARKING SIGN DETAIL

49

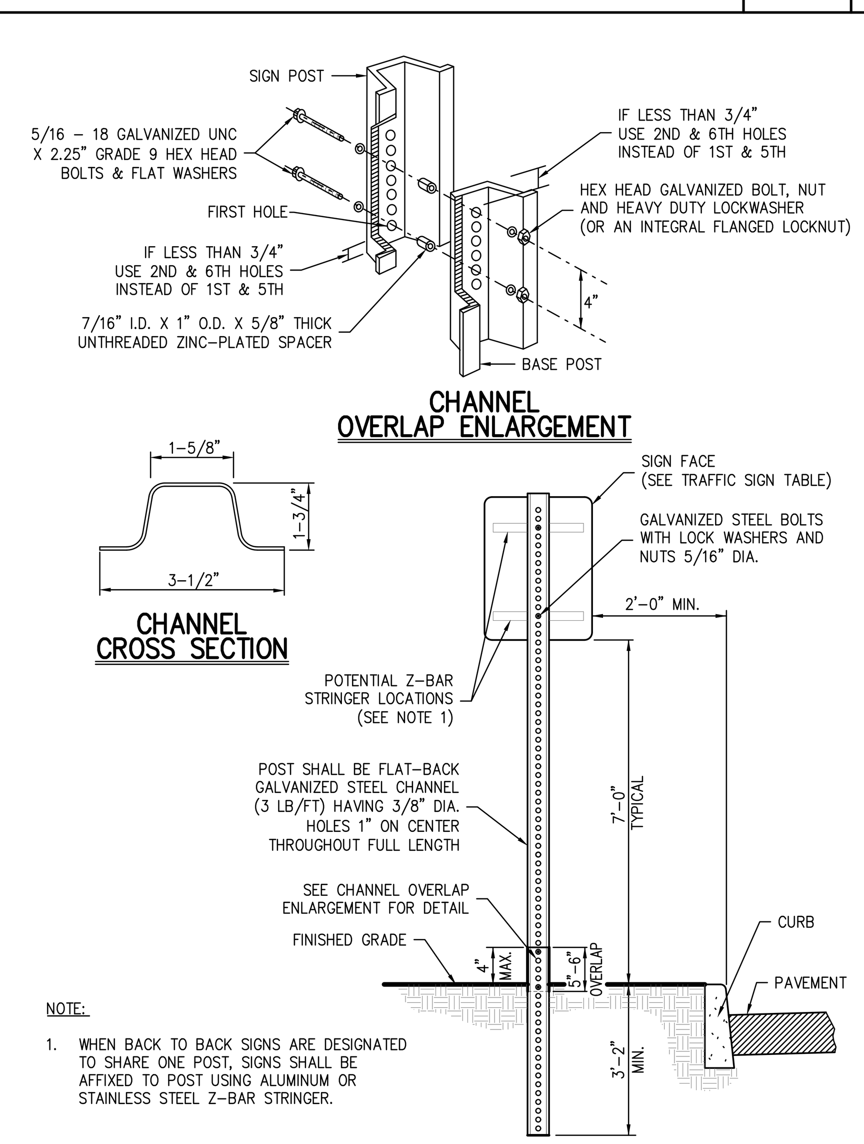

NOTE:

1. WHEN BACK TO BACK SIGNS ARE DESIGNATED TO SHARE ONE POST, SIGNS SHALL BE AFFIXED TO POST USING ALUMINUM OR STAINLESS STEEL Z-BAR STRINGER.

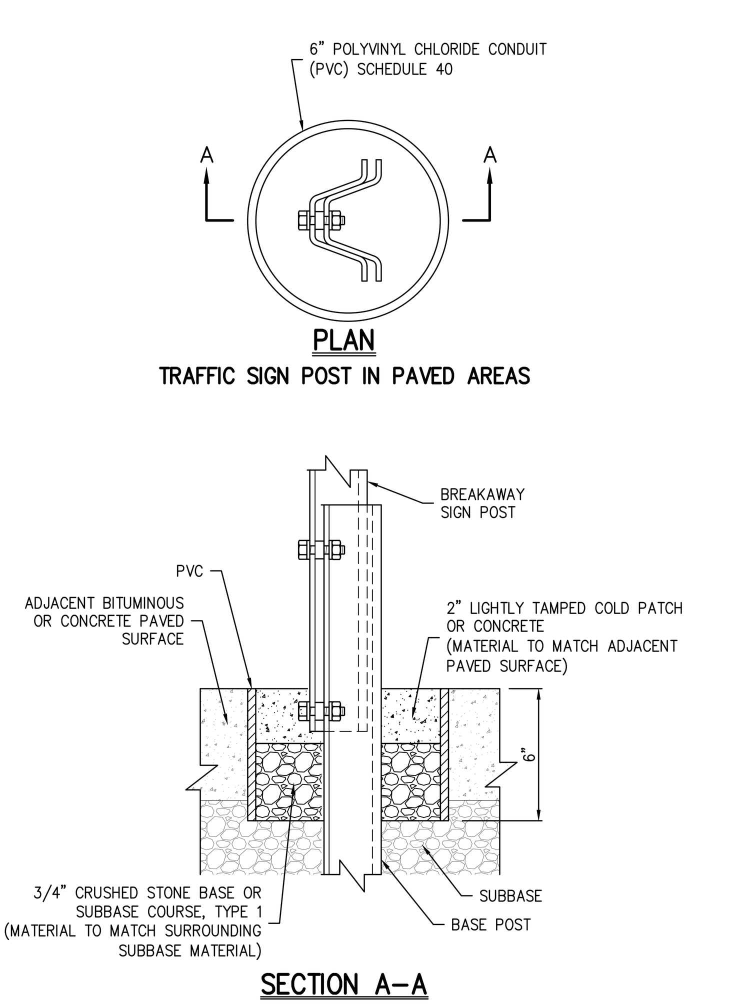

TRAFFIC SIGN POST
(BREAKAWAY STEEL CHANNEL)

50

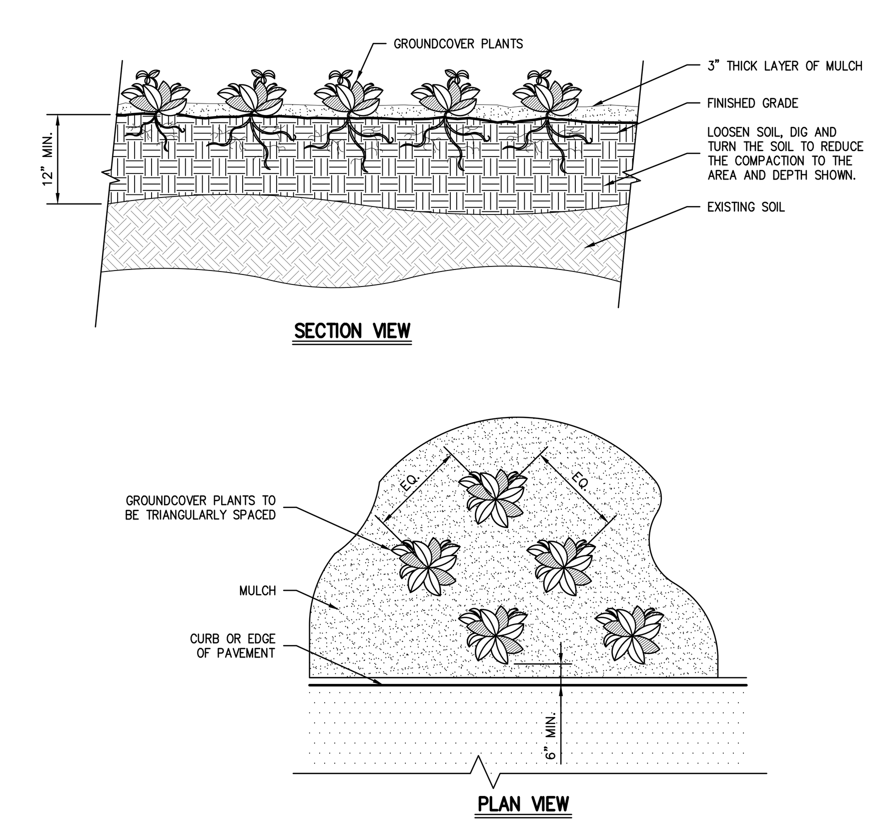

NOTES:

1. SEE PLANTING PLAN FOR GROUNDCOVER SPECIES, SIZE, AND SPACING DIMENSION.
2. SETTLE SOIL AROUND ROOT BALL OF EACH GROUNDCOVER PLANT PRIOR TO MULCHING.
3. ALL PLANTING BEDS SHALL BE FREE OF WEEDS AND GRASS PRIOR TO AND FOLLOWING INSTALLATION OF PLANTS.
4. PLANTS IN CONTAINERS MUST HAVE THE FIBROUS ROOTS PULLED APART.
5. PROPOSED PLANT MATERIAL SHALL BEAR THE SAME RELATION TO FINISHED GRADE AS IT BORE TO PREVIOUS EXISTING GRADE.

GROUNDCOVER

51

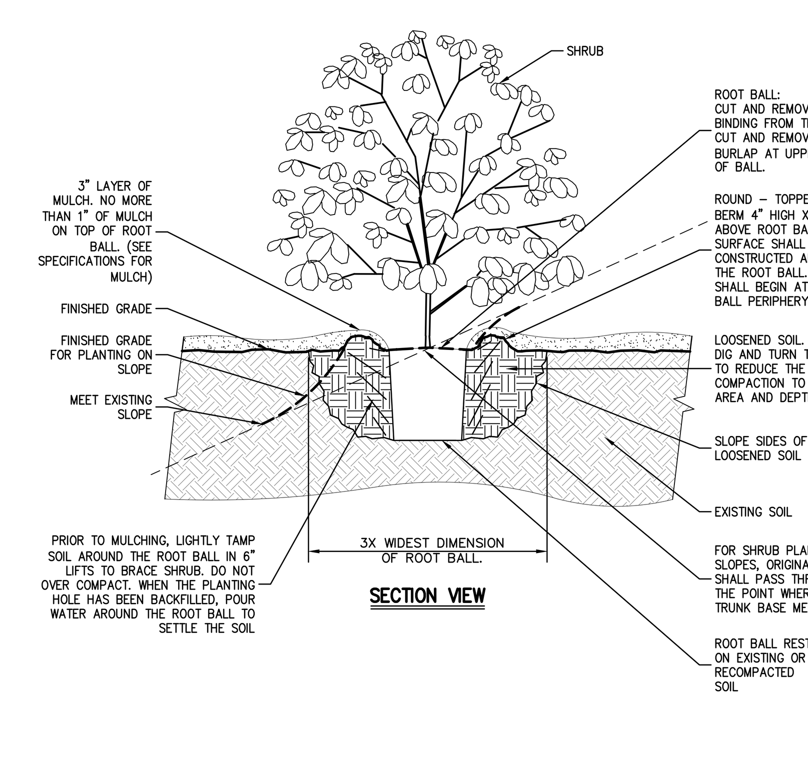

NOTES:

1. ALL PLANTING BEDS SHALL BE FREE OF WEEDS AND GRASS PRIOR TO AND FOLLOWING INSTALLATION OF PLANTS.
2. PLANTS IN CONTAINERS MUST HAVE THE FIBROUS ROOTS PULLED APART.
3. PROPOSED PLANT MATERIAL SHALL BEAR THE SAME RELATION TO FINISHED GRADE AS IT BORE TO PREVIOUS EXISTING GRADE.

SHRUB PLANTING

52

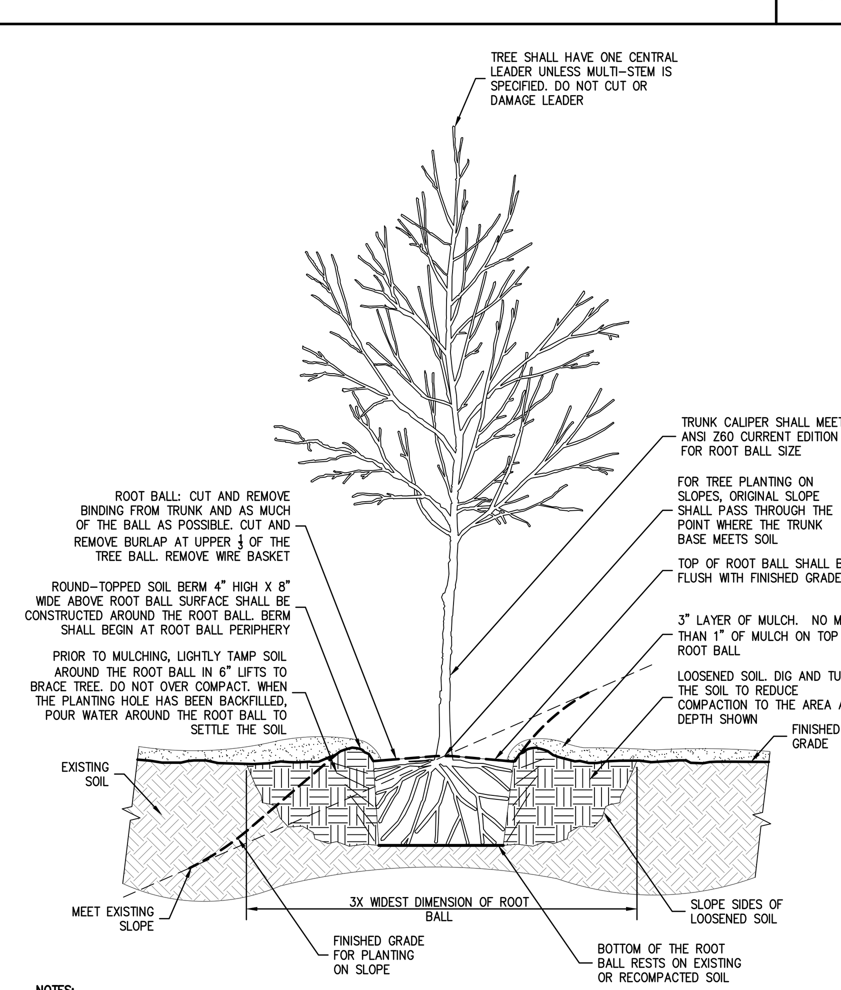

NOTES:

1. ALL PLANTING BEDS SHALL BE FREE OF WEEDS AND GRASS PRIOR TO AND FOLLOWING INSTALLATION OF PLANTS.
2. PLANTS IN CONTAINERS MUST HAVE THE FIBROUS ROOTS PULLED APART.
3. PROPOSED PLANT MATERIAL SHALL BEAR THE SAME RELATION TO FINISHED GRADE AS IT BORE TO PREVIOUS EXISTING GRADE.
4. SEE TREE STAKING DETAIL IF STAKING IS REQUIRED.

TREE PLANTING
(DECIDUOUS AND EVERGREEN)

53

APPROVED BY TOWN OF NORTH CASTLE PLANNING BOARD RESOLUTION, DATED ______

CHRISTOPHER CARTHY, CHAIRMAN, TOWN OF NORTH CASTLE PLANNING BOARD — DATE: ______

ENGINEERING PLANS REVIEWED FOR CONFORMANCE TO RESOLUTION

JOSEPH M. CERMELE, PE
KSCJ CONSULTING
CONSULTING TOWN ENGINEERS — DATE: ______

No.	Revision	Date	By
1.	PLANNING BOARD SUBMISSION	10/06/2023	BMS
2.	TOWN CONSERVATION BOARD SUBMISSION	10/31/2023	BMS
3.	PLANNING BOARD RESUBMISSION	11/10/2023	BMS
4.	PLANNING BOARD RESUBMISSION	12/21/2023	BMS

Previous Editions Obsolete

APPLICANT:
AIRPORT CAMPUS I-V LLC
46 WESTCHESTER AVENUE
POUND RIDGE, NY 10576

ARCHITECT:
LESSARD DESIGN
8521 LEESBURG PIKE, 7TH FLOOR
VIENNA, VA 22182

JMC Planning, Engineering, Landscape Architecture & Land Surveying, PLLC
JMC Site Development Consultants, LLC
John Meyer Consulting, Inc.
120 BEDFORD ROAD • ARMONK, NY 10504
voice 914.273.5225 • fax 914.273.2102
www.jmcpllc.com
JMC

CONSTRUCTION DETAILS

AIRPORT CAMPUS
113 KING STREET (NY ROUTE 120)
NORTH CASTLE, NY 10504

ANY ALTERATION OF PLANS, SPECIFICATIONS, PLATS AND REPORTS BEARING THE SEAL OF A LICENSED PROFESSIONAL ENGINEER OR LICENSED LAND SURVEYOR IS A VIOLATION OF ARTICLE 145 OF THE NEW YORK STATE EDUCATION LAW, EXCEPT AS PROVIDED FOR BY SECTION 7209, SUBSECTION 2.

STATE OF NEW YORK • DAVID P. LOMBARDI • LICENSED PROFESSIONAL ENGINEER • 071001

Drawn: BMS	Approved: AG
Scale:	NOT TO SCALE
Date:	10/06/2023
Project No:	15072
15072-DETAILS	C-903 –
Drawing No:	C-903

COPYRIGHT © 2023 by JMC. All Rights Reserved. No part of this document may be reproduced, stored in a retrieval system, or transmitted in any form or by means, electronic, mechanical, photocopying, recording or otherwise, without the prior written permission of JMC PLANNING, ENGINEERING, LANDSCAPE ARCHITECTURE & LAND SURVEYING, PLLC | JMC SITE DEVELOPMENT CONSULTANTS, LLC | JOHN MEYER CONSULTING, INC. (JMC). Any modifications or alterations to this document without the written permission of JMC shall render them invalid and unusable.

NOT FOR CONSTRUCTION

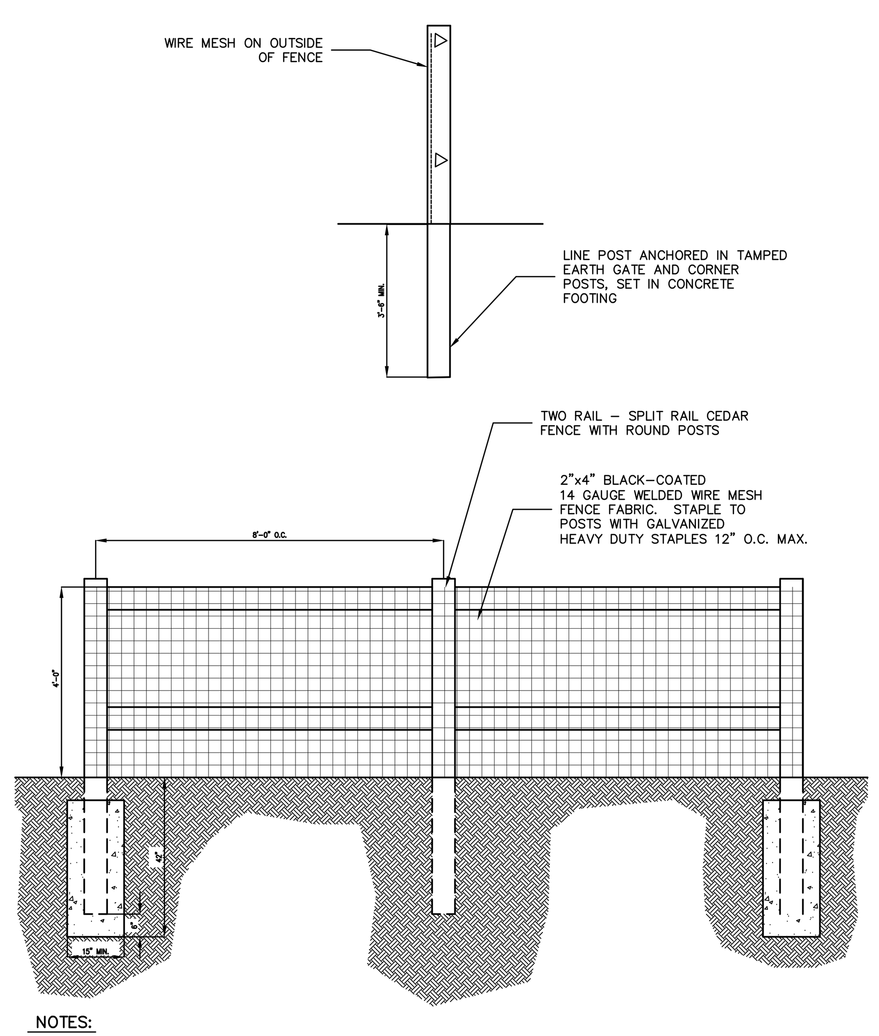

NOTES:
1. METAL FLANGES, CLEATS, BOLTS, SCREWS, ETC. SHALL BE STAINLESS STEEL OR GALVANIZED STEEL.
2. ALL LUMBER TO BE NORTHERN WHITE CEDAR.
3. PROVIDE DIAGONAL CROSS-BRACING OF RAILS AT GATE PANELS
4. SEE LAYOUT PLAN FOR LOCATION.

SPLIT RAIL FENCE WITH WIRE MESH — 54

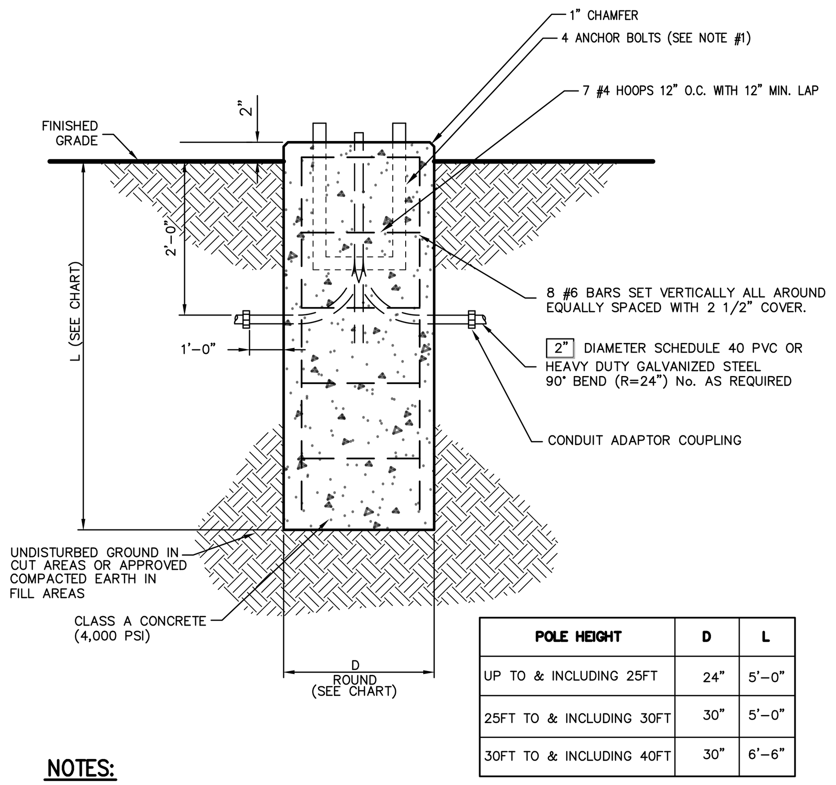

POLE HEIGHT	D	L
UP TO & INCLUDING 25FT	24"	5'-0"
25FT TO & INCLUDING 30FT	30"	5'-0"
30FT TO & INCLUDING 40FT	30"	6'-6"

NOTES:
1. IT SHALL BE THE CONTRACTOR'S RESPONSIBILITY TO CHECK AND VERIFY ALL ANCHOR BOLT DIMENSIONS (SIZE, BOLT CIRCLE, ETC.) WITH THE CONTRACTOR WHO WILL BE INSTALLING THE LIGHTING STANDARD PRIOR TO INSTALLATION OF THE FOUNDATIONS.
2. CHAMFER EXPOSED EDGES OF ALL FOUNDATIONS.
3. PROVIDE INSULATED GROUNDING BUSHING ON EXPOSED ENDS (IN BASE OF POLE) OF ALL GALVANIZED STEEL BENDS.
4. POLES AND LUMINAIRES WILL BE FURNISHED AND INSTALLED BY OTHERS.

LIGHTING STANDARD FOUNDATION (ROUND – 2" REVEAL) — 55

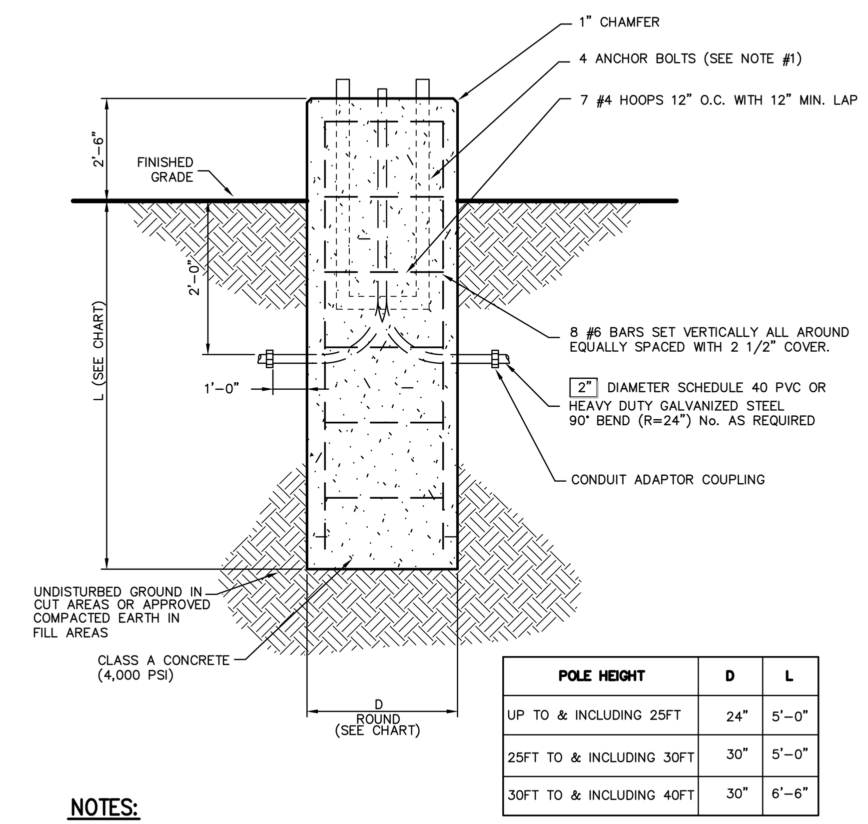

POLE HEIGHT	D	L
UP TO & INCLUDING 25FT	24"	5'-0"
25FT TO & INCLUDING 30FT	30"	5'-0"
30FT TO & INCLUDING 40FT	30"	6'-6"

NOTES:
1. IT SHALL BE THE CONTRACTOR'S RESPONSIBILITY TO CHECK AND VERIFY ALL ANCHOR BOLT DIMENSIONS (SIZE, BOLT CIRCLE, ETC.) WITH THE CONTRACTOR WHO WILL BE INSTALLING THE LIGHTING STANDARD PRIOR TO INSTALLATION OF THE FOUNDATIONS.
2. CHAMFER EXPOSED EDGES OF ALL FOUNDATIONS.
3. PROVIDE INSULATED GROUNDING BUSHING ON EXPOSED ENDS (IN BASE OF POLE) OF ALL GALVANIZED STEEL BENDS.
4. POLES AND LUMINAIRES WILL BE FURNISHED AND INSTALLED BY OTHERS.

LIGHTING STANDARD FOUNDATION (ROUND – 2'-6" REVEAL) — 56

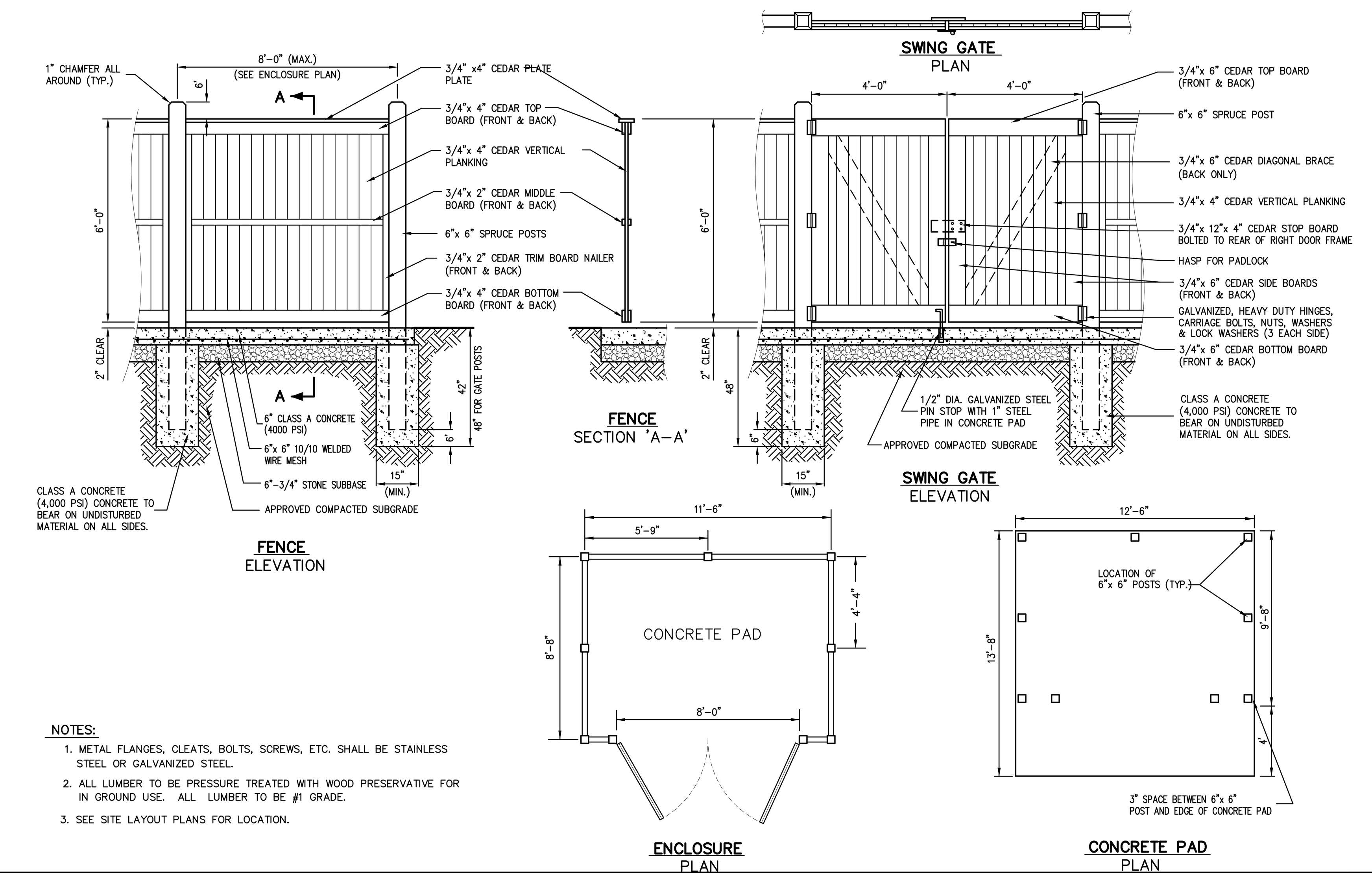

NOTES:
1. METAL FLANGES, CLEATS, BOLTS, SCREWS, ETC. SHALL BE STAINLESS STEEL OR GALVANIZED STEEL.
2. ALL LUMBER TO BE PRESSURE TREATED WITH WOOD PRESERVATIVE FOR IN GROUND USE. ALL LUMBER TO BE #1 GRADE.
3. SEE SITE LAYOUT PLANS FOR LOCATION.

TRASH ENCLOSURE WITH CONCRETE PAD (WOOD) — 57

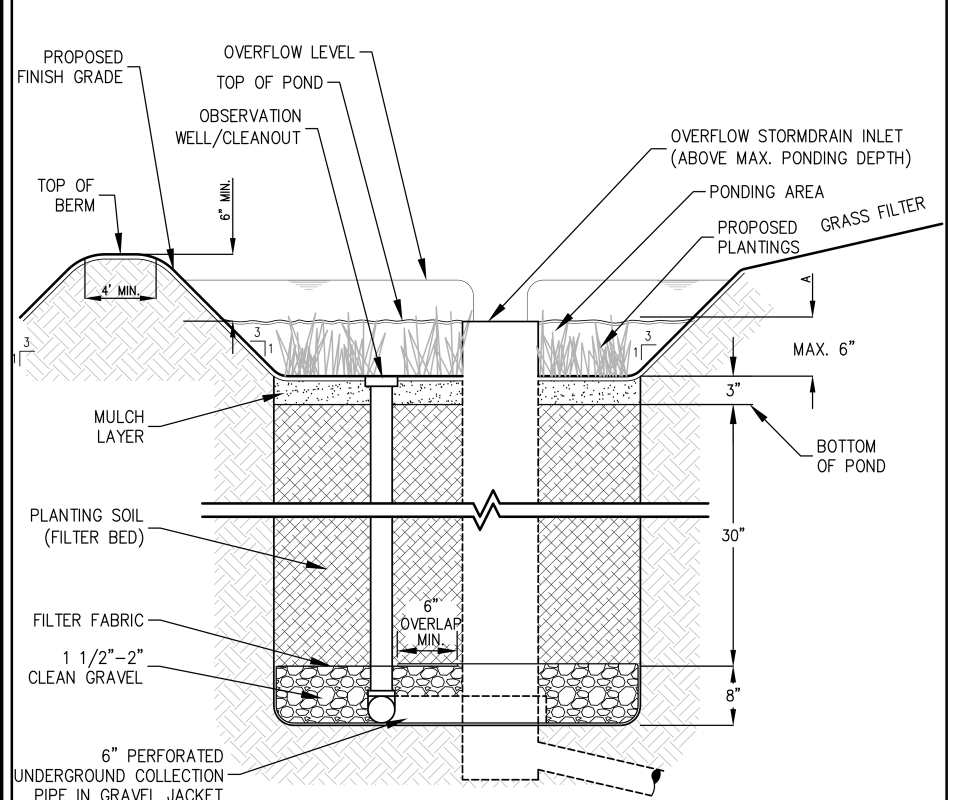

NOTE
1. BIORETENTION MATERIALS TO BE AS SPECIFIED IN NYSDOT ITEM 208.0103 22 BIORETENTION AND DRY SWALE SOIL.
2. RIP RAP SHALL BE PLACED AT THE INLET OF EACH BIORETENTION AREA.

BIORETENTION FACILITY — 58

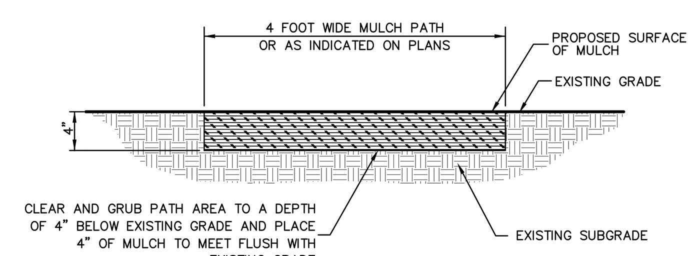

MULCH WALKING TRAIL — 59

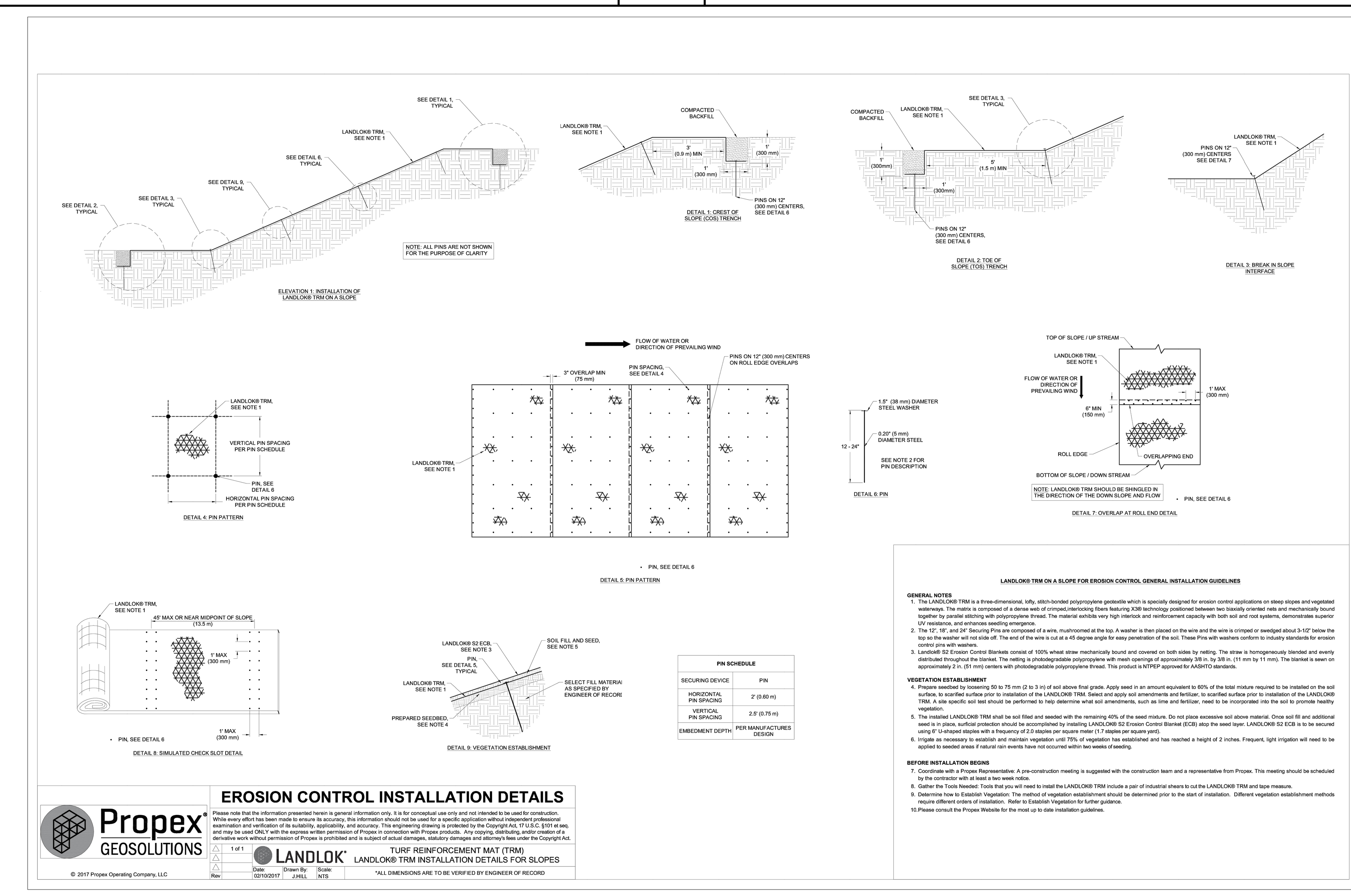

LANDLOK® Product Data
LANDLOK® S2 ECB

LANDLOK® S2 erosion control blanket (ECB) consist of 100% wheat straw mechanically bound and covered on both sides by netting. The straw is homogeneously blended and evenly distributed throughout the blanket. The netting is photodegradable polypropylene with mesh openings of approximately 3/8 in by 3/8 in (11 mm by 11 mm). The blanket is sewn on approximately 2 in (51 mm) centers with photodegradable polypropylene thread.

LANDLOK® S2 conforms to the property values listed below[1].

PROPERTY	TEST METHOD	ENGLISH	METRIC
PHYSICAL			
Mass/Unit Area [2]	ASTM D-6475	8.0 oz/yd²	271 g/m²
Thickness [2]	ASTM D-6525	335 mils	8.5 mm
MECHANICAL			
Tensile Strength [2]	ASTM D-6818	194 x 116 lbs/ft	2.8 x 1.7 kN/m
Elongation [2]	ASTM D-6818	25%	25%
ENDURANCE			
Functional Longevity [2]	Observed	Up to 12 months	
ROLL SIZES		8 ft x 112.5 ft	2.45 m x 34.29 m

NOTES:
1. The property values listed above are effective 03/09/2018 and are subject to change without notice.
2. Values represent testing at time of manufacture and are shown as typical values.

EROSION CONTROL MATTING — 60

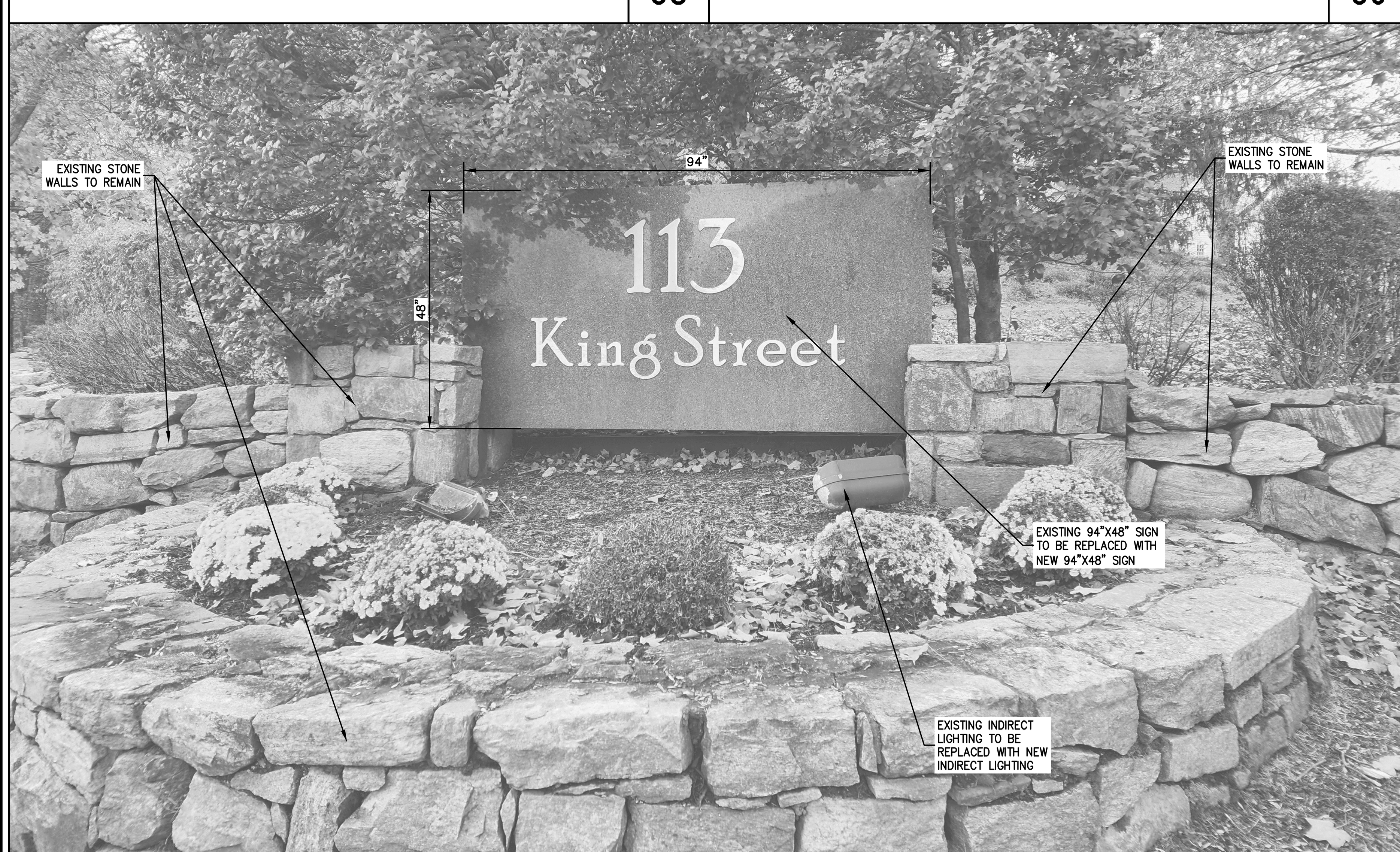

KING STREET ENTRANCE MONUMENT SIGNS (2) — 61

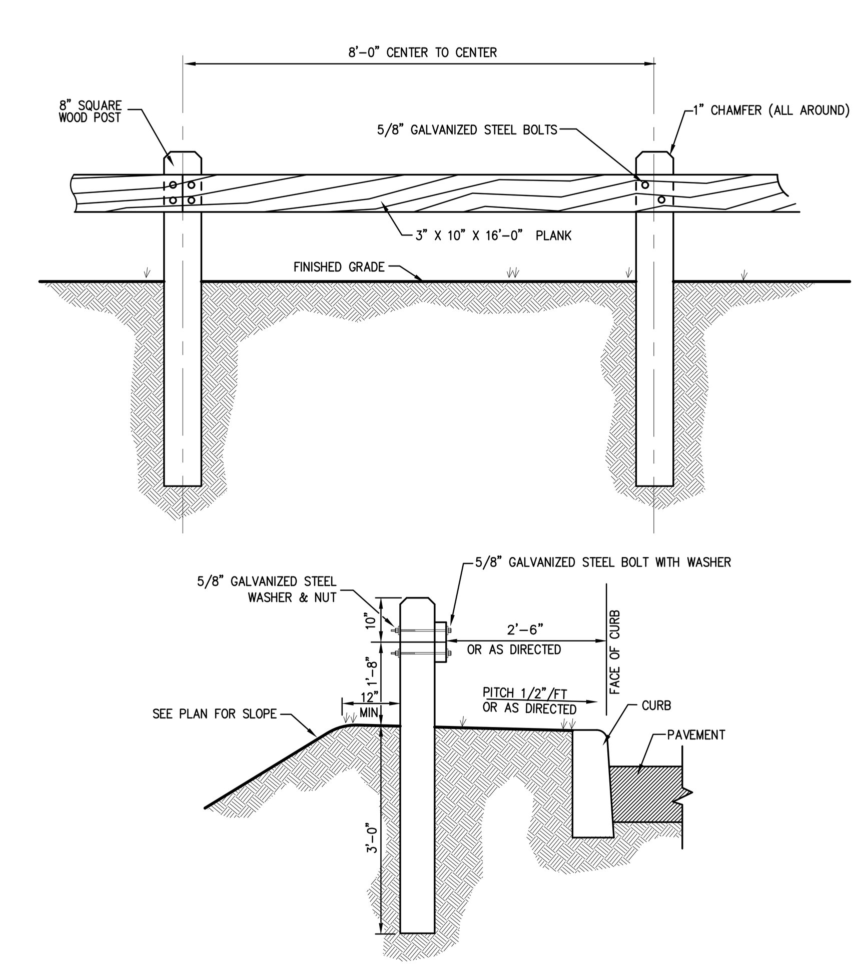

NOTES
1. ALL WOOD TO BE SEASONED NO.1 DOUGLAS FIR, SOUTHERN PINE OR OTHER APPROVED STRUCTURAL LUMBER.
2. GALVANIZED BOLT AND NUT TO BE 4000# MIN., 5400# MAX. TENSILE STRENGTH. AFTER GALVANIZING BOLT AND NUT, THE NUT SHALL BE FREE RUNNING ON THE BOLT.

WOOD GUIDE RAIL — 62

X

X

APPROVED BY TOWN OF NORTH CASTLE PLANNING BOARD RESOLUTION, DATED ____

CHRISTOPHER CARTHY, CHAIRMAN, TOWN OF NORTH CASTLE PLANNING BOARD — DATE: ____

ENGINEERING PLANS REVIEWED FOR CONFORMANCE TO RESOLUTION

JOSEPH M. CERMELE, PE
KSCJ CONSULTING
CONSULTING TOWN ENGINEERS — DATE: ____

No.	Revision	Date	By
1.	PLANNING BOARD SUBMISSION	10/06/2023	BMS
2.	PLANNING BOARD RESUBMISSION	11/10/2023	BMS
3.	PLANNING BOARD RESUBMISSION	12/21/2023	BMS

Previous Editions Obsolete

APPLICANT:
AIRPORT CAMPUS I-V LLC
46 WESTCHESTER AVENUE
POUND RIDGE, NY 10576

ARCHITECT:
LESSARD DESIGN
8521 LEESBURG PIKE, 7TH FLOOR
VIENNA, VA 22182

JMC Planning, Engineering, Landscape Architecture & Land Surveying, PLLC
JMC Site Development Consultants, LLC
John Meyer Consulting, Inc.
120 BEDFORD ROAD • ARMONK, NY 10504
voice 914.273.5225 • fax 914.273.2102
www.jmcpllc.com

JMC

CONSTRUCTION DETAILS

AIRPORT CAMPUS
113 KING STREET (NY ROUTE 120)
NORTH CASTLE, NY 10504

ANY ALTERATION OF PLANS, SPECIFICATIONS, PLATS AND REPORTS BEARING THE SEAL OF A LICENSED PROFESSIONAL ENGINEER OR LICENSED LAND SURVEYOR IS A VIOLATION OF ARTICLE 145 OF THE NEW YORK STATE EDUCATION LAW, EXCEPT AS PROVIDED FOR BY SECTION 7209, SUBSECTION 2.

STATE OF NEW YORK • DAVID P. LOMBARDI • LICENSED PROFESSIONAL ENGINEER • 071001

Drawn: BMS	Approved: AG
Scale:	NOT TO SCALE
Date:	10/06/2023
Project No:	15072
15072-DETAILS	C-904
Drawing No:	C-904

COPYRIGHT © 2023 by JMC All Rights Reserved. No part of this document may be reproduced, stored in a retrieval system, or transmitted in any form or by means, electronic, mechanical, photocopying, recording or otherwise, without the prior written permission of JMC PLANNING, ENGINEERING, LANDSCAPE ARCHITECTURE & LAND SURVEYING, PLLC | JMC SITE DEVELOPMENT CONSULTANTS, LLC | JOHN MEYER CONSULTING, INC. (JMC). Any modifications or alterations to this document without the written permission of JMC shall render them invalid and unusable.

NOT FOR CONSTRUCTION

PLANT SCHEDULE					
CODE	QTY	BOTANICAL / COMMON NAME	SIZE	ROOT COND.	REMARKS
EVERGREEN TREES					
ACC	93	Abies concolor / White Fir	6` - 8` HT.	B & B	
JV	84	Juniperus virginiana / Eastern Redcedar	6` - 7` HT.	B & B	
PA	85	Picea abies / Norway Spruce	8`-10` HT	B & B	
PG	69	Picea glauca / White Spruce	8`-10` HT	B & B	
PS	83	Pinus strobus / White Pine	6` - 8` HT.	B & B	
TO	123	Thuja x 'Green Giant' / Green Giant Arborvitae	6` - 8` HT.	B & B	
FLOWERING & UNDERSTORY TREES					
AC	117	Amelanchier canadensis / Shadblow Serviceberry	8` - 10` HT.	B & B	
BN	24	Betula nigra `Heritage` / Heritage River Birch	7`-8` HT.	B & B	
CC	59	Cercis canadensis / Eastern Redbud Multi-trunk	8` - 10` HT.	B & B	
CFW	40	Cornus florida 'White' / White Flowering Dogwood	8` - 10` HT.	B & B	
CFR	36	Cornus florida rubra / Pink Flowering Dogwood	8` - 10` HT.	B & B	
DECIDUOUS TREES					
AG	34	Acer rubrum `October Glory` / October Glory Maple	3" - 3 1/2" Cal.	B & B	
AB2	16	Acer rubrum 'Bowhall' / Bowhall Red Maple	2 1/2" - 3" CAL.	3"Cal	
AR	41	Acer rubrum 'Red Sunset' / Red Maple 'Red Sunset'	3" - 3 1/2" Cal.	B & B	
LS2	6	Liquidambar styraciflua / Sweet Gum	2" - 2 1/2" CAL.	B & B	
LS	18	Liquidambar styraciflua 'Slender Silhouette' / Slender Silhouette Sweet Gum	2" - 2 1/2" CAL.	B & B	
NS	23	Nyssa sylvatica / Black gum	2" - 2 1/2" CAL.	B & B	
PO	7	Platanus occidentalis / American Sycamore	3" - 3 1/2" CAL.	B & B	
PR	9	Prunus serotina / Black Cherry	2" - 2 1/2" CAL.	B & B	
QA	11	Quercus alba / White Oak	2" - 3 1/2" CAL.	B & B	
QB	13	Quercus bicolor / Swamp White Oak	2" - 2 1/2" CAL.	B & B	
QM2	10	Quercus macrocarpa / Burr Oak	2 1/2" - 3" CAL.	B & B	
QP	33	Quercus palustris / Pin Oak	2" - 3 1/2" CAL.	B & B	
QR	27	Quercus rubra / Red Oak	2" - 3 1/2" CAL.	B & B	
TD	8	Taxodium distichum / Bald Cypress	2 1/2" - 3" CAL.	B & B	
UA	9	Ulmus americana / American Elm 'Princeton'	3" - 3 1/2" CAL.	B & B	

SEED MIXES:

SEED MIX #1
1. WETLAND RESTORATION SEED MIX SHALL BE ERNST FACW WETLAND MEADOW MIX

   SEEDING RATE: 20 LB PER ACRE, OR 1/2 LB PER 1,000 SQ FT WITH A COVER CROP. FOR A COVER CROP USE ONE OF THE FOLLOWING: GRAIN RYE (1 SEP TO 30 APR; 30 LBS/ACRE), JAPANESE MILLET (1 MAY TO 31 AUG; 10 LBS/ACRE), OR BARNYARD GRASS (1 MAY TO 31 AUG; 10 LBS/ACRE).

SEED MIX #2
2. DETENTION BASIN SEED MIX SHALL BE ERNST NATIVE DETENTION AREA MIX ITEM NUMBER: ERNMX-183

   SEEDING RATE: 20 LB PER ACRE, OR 1/2 LB PER 1,000 SQ FT FOR A COVER CROP: GRAIN RYE (1 SEP TO 30 APR; 30 LBS/ACRE), JAPANESE MILLET (1 MAY TO 31 AUG; 10 LBS/ACRE). GRASSES & GRASS-LIKE SPECIES-HERBACEOUS PERENNIAL; STORMWATER MANAGEMENT

3. SLOPE SEED MIX SHALL BE ERNST NATIVE STEEP SLOPE MIX W/GRAIN RYE ITEM NUMBER: ERNMX-181-2 WHICH SHALL BE INSTALLED ON ALL SLOPES 3 HORIZONTAL TO 1 VERTICAL OR GREATER, EXCEPT IN LOCATIONS BETWEEN TOWNHOME UNITS, AND/OR AS DIRECTED BY PROJECT ENGINEER/LANDSCAPE ARCHITECT.

   SEEDING RATE: 75 LB PER ACRE EROSION CONTROL & REVEGETATION; GRASSES & GRASS-LIKE SPECIES - HERBACEOUS PERENNIAL; HERBACEOUS FLOWERING SPECIES - HERBACEOUS PERENNIAL USE THIS FORMULA WITH GRAIN RYE AS A COVER CROP (FROM AUGUST 1ST-FEBRUARY 15TH).

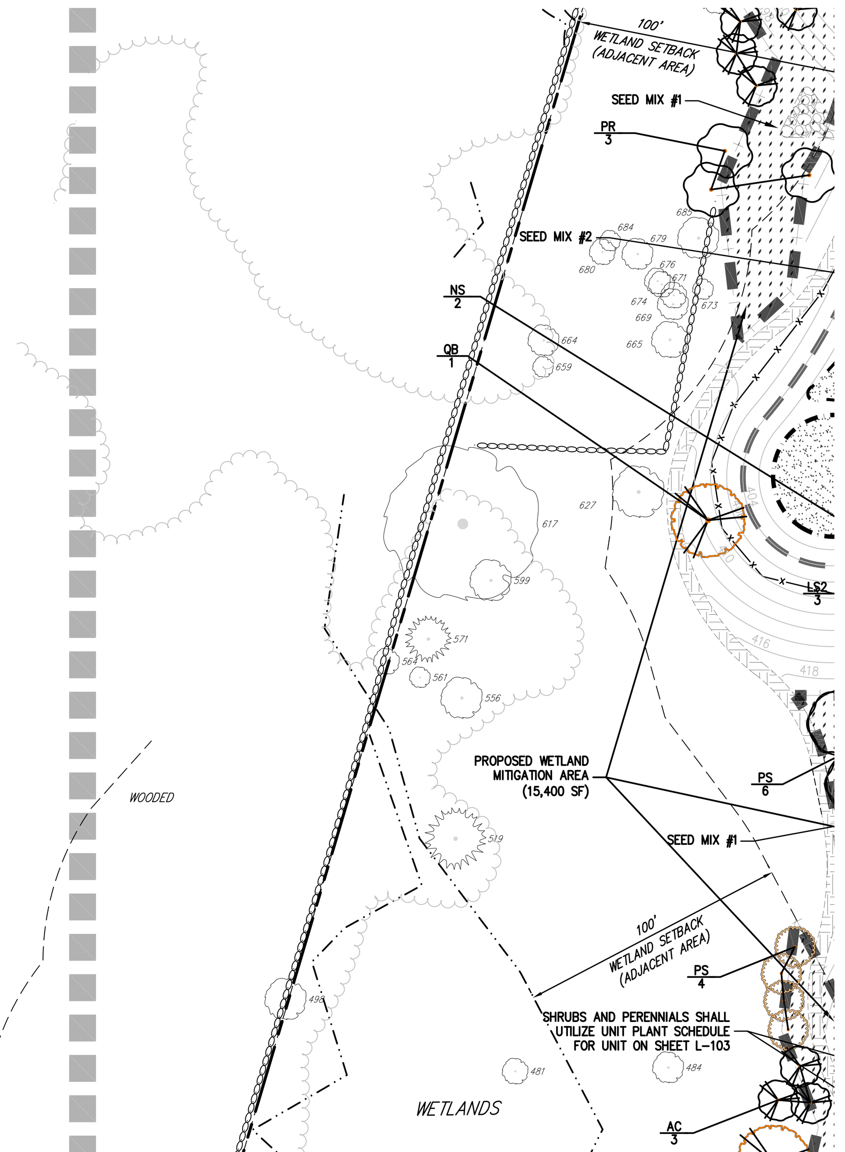

LEGEND

- EXISTING PROPERTY LINE
- ADJACENT PROPERTY LINE
- EXISTING SETBACK LINE
- EXISTING WETLAND LINE AND DELINEATION
- EXISTING BUILDING OVERHANG
- EXISTING BUILDING LINE
- EXISTING PAVEMENT EDGE
- EXISTING CURB LINE
- EXISTING STONE WALL
- EXISTING RETAINING WALL
- EXISTING GUIDE RAIL
- EXISTING FENCE
- EXISTING TREE AND DESIGNATION
- EXISTING TREE LINE
- EXISTING DIRECTIONAL ARROWS
- EXISTING PAINT
- EXISTING UTILITY POLE
- EXISTING LIGHT POLE
- EXISTING SIGN
- EXISTING FEATURE TO BE REMOVED
- PROPOSED BUILDING LINE
- PROPOSED CONCRETE CURB
- PROPOSED SAWCUT LINE
- PROPOSED CONCRETE SIDEWALK
- PROPOSED MONOLITHIC CONCRETE SIDEWALK & CURB
- PROPOSED DROP CURB AND RAMP
- PROPOSED HEAVY DUTY PAVEMENT
- PROPOSED PERVIOUS PAVEMENT
- PROPOSED CONCRETE APRON
- PROPOSED MULCH TRAIL
- PROPOSED RETAINING WALL (DESIGN BY OTHERS)
- PROPOSED FENCE
- PROPOSED DOUBLE ARM LIGHTING STANDARD (DESIGN BY OTHERS)
- PROPOSED SINGLE ARM LIGHTING STANDARD (DESIGN BY OTHERS)
- 2-4" WIDE YELLOW LINES 8"O.C.
- 12" WIDE WHITE STOP LINE
- TRAFFIC SIGN LOCATION & DESIGNATION
- PROPOSED SHADE TREE
- PROPOSED FLOWERING TREE
- PROPOSED CONIFEROUS TREE
- PROPOSED SHRUBS

NOTES:

1. EXISTING CONDITIONS DEPICTED ON THIS PLAN HAVE BEEN TAKEN FROM SURVEY TITLED, "PARCEL COMPILATION SURVEY DEPICTING LAND OF MBIA INSURANCE CORP.," PREPARED BY JOHN MEYER CONSULTING, DATED 09/30/2005 AND SUPPLEMENTED WITH SURVEY TITLED, "TOPOGRAPHIC SURVEY," PREPARED BY JMC PLANNING, ENGINEERING, LANDSCAPE ARCHITECTURE & LAND SURVEYING, PLLC, DATED 02/10/2022.
2. THE WETLANDS DEPICTED ON THIS PLAN WERE DELINEATED BY ECOLOGICAL SOLUTIONS, LLC ON 07/10/2018 AND CONFIRMED BY THE TOWN WETLAND CONSULTANT ON 10/01/2020.
3. ALL PLANT MATERIAL SHALL BE FIRST QUALITY STOCK. PLANTED MATERIAL AND METHODS OF INSTALLATION SHALL CONFORM TO THE AMERICAN NURSERY AND LANDSCAPE ASSOCIATION, AMERICAN STANDARD FOR NURSERY STOCK, LATEST EDITION.
4. ALL AREAS OF THE SITE NOT OCCUPIED BY BUILDING OR PAVEMENT AND NOT SPECIFIED AS BEING PLANTED WITH TREES, SHRUBS OR GROUND COVER SHALL BE LAWN.
5. ALL PLANTING BEDS SHALL BE MULCHED WITH 3" OF BROWN MULCH. MULCH SHALL BE CLEAN, NON-DYED, TOXIC FREE, SHREDDED HARDWOOD.
6. PLANT MATERIALS AS SPECIFIED ON THE DRAWINGS AND DELIVERED TO THE SITE SHALL BE NURSERY GROWN AND CERTIFIED TRUE TO THEIR GENUS, SPECIES AND VARIETY. SUBSTITUTIONS ARE NOT PERMITTED WITHOUT THE PROJECT LANDSCAPE ARCHITECTS WRITTEN APPROVAL.
7. ALL LANDSCAPING SHALL CONTINUE TO BE MAINTAINED IN A HEALTHY GROWING CONDITION THROUGHOUT THE DURATION OF THE PROJECT. ANY PLANTING NOT SO MAINTAINED SHALL BE REPLACED WITH NEW PLANTS AT THE BEGINNING OF THE NEXT, IMMEDIATELY FOLLOWING, GROWING SEASON.
8. ALL TREES AND SHRUBS SHALL BE PRUNED AND SHAPED AND BE SUBJECT TO THE APPROVAL OF THE PROJECT LANDSCAPE ARCHITECT AND GOVERNMENTAL AUTHORITIES HAVING JURISDICTION.
9. PLANTING STOCK SHALL BE WELL-BRANCHED AND WELL-FORMED, SOUND, VIGOROUS, HEALTHY, FREE FROM DISEASE, SUN-SCALE, WINDBURN, ABRASION, AND HARMFUL INSECTS OR INSECTS EGGS; AND SHALL HAVE HEALTHY, NORMAL UNBROKEN ROOT SYSTEMS. DECIDUOUS TREES AND SHRUBS SHALL BE SYMMETRICALLY DEVELOPED, OF UNIFORM HABIT OF GROWTH, WITH STRAIGHT TRUNKS OR STEMS, AND FREE FROM OBJECTIONABLE DISFIGUREMENTS. EVERGREEN TREES AND SHRUBS SHALL HAVE WELL-DEVELOPED SYMMETRICAL TOPS WITH TYPICAL SPREAD OF BRANCHES FOR EACH PARTICULAR SPECIES OR VARIETY. ONLY VINES AND GROUND COVER PLANTS WELL ESTABLISHED IN REMOVAL CONTAINERS, INTEGRAL CONTAINERS, OR FORMED HOMOGENEOUS SOIL SECTIONS SHALL BE USED. PLANTS SHALL BE GROWN UNDER CLIMATIC CONDITIONS SIMILAR TO THOSE IN THE LOCALITY OF THE PROJECT.
10. ALL STOCK SHALL BE BALLED AND BURLAPPED OR CONTAINER GROWN STOCK, UNLESS OTHERWISE SPECIFIED. BAREROOT STOCK OF ANY KIND IS UNACCEPTABLE UNLESS SPECIFIED.
11. ALL PLANTING BEDS, LAWNS AND LANDSCAPED AREAS SHALL RECEIVE A MINIMUM 4" THICK LAYER OF TOPSOIL, UNLESS OTHERWISE SPECIFIED

APPROVED BY TOWN OF NORTH CASTLE PLANNING BOARD RESOLUTION, DATED ______

______ DATE: ______
CHRISTOPHER CARTHY, CHAIRMAN,
TOWN OF NORTH CASTLE PLANNING BOARD

ENGINEERING PLANS REVIEWED FOR CONFORMANCE TO RESOLUTION

______ DATE: ______
JOSEPH M. CERMELE, PE
KSCJ CONSULTING
CONSULTING TOWN ENGINEERS

GRAPHIC SCALE
40 0 20 40 80 160
(IN FEET)
1 inch = 40 ft.

No.	Revision	Date	By
1.	REVISED FEIS	01/20/2023	BMS
2.	PLANNING BOARD SUBMISSION	10/06/2023	BMS
3.	TOWN CONSERVATION BOARD SUBMISSION	10/31/2023	BMS
4.	PLANNING BOARD RESUBMISSION	11/10/2023	BMS
5.	ARB SUBMISSION	11/22/2023	BMS
6.	PLANNING BOARD RESUBMISSION	12/21/2023	BMS

Previous Editions Obsolete

APPLICANT/OWNER:
AIRPORT CAMPUS I-V LLC
46 WESTCHESTER AVENUE
POUND RIDGE, NY 10576

JMC Planning, Engineering, Landscape Architecture & Land Surveying, PLLC
JMC Site Development Consultants, LLC
John Meyer Consulting, Inc.
120 BEDFORD ROAD • ARMONK, NY 10504
voice 914.273.5225 • fax 914.273.2102
www.jmcpllc.com

JMC

LANDSCAPE PLAN

AIRPORT CAMPUS
113 KING STREET (NY ROUTE 120)
NORTH CASTLE, NY 10504

ANY ALTERATION OF PLANS, SPECIFICATIONS, PLATS AND REPORTS BEARING THE SEAL OF A LICENSED PROFESSIONAL ENGINEER OR LICENSED LAND SURVEYOR IS A VIOLATION OF SECTION 7209 OF THE NEW YORK STATE EDUCATION LAW, EXCEPT AS PROVIDED FOR BY SECTION 7209, SUBSECTION 2.

STATE OF NEW YORK • DAVID P. LOMBARDI • LICENSED PROFESSIONAL ENGINEER • 071001

Drawn: JJ		Approved: AG	
Scale: 1" = 40'			
Date: 09/21/2022			
Project No: 15072			
15072-LAND	L-101	LAND.scr	
Drawing No: L-101			

COPYRIGHT © 2023 by JMC. All Rights Reserved. No part of this document may be reproduced, stored in a retrieval system, or transmitted in any form or by means, electronic, mechanical, photocopying, recording or otherwise, without the prior written permission of JMC PLANNING, ENGINEERING, LANDSCAPE ARCHITECTURE & LAND SURVEYING, PLLC | JMC SITE DEVELOPMENT CONSULTANTS, LLC | JOHN MEYER CONSULTING, INC. (JMC). Any modifications or alterations to this document without the written permission of JMC shall render them invalid and unusable.

NOT FOR CONSTRUCTION

NOTES:

1. EXISTING CONDITIONS DEPICTED ON THIS PLAN HAVE BEEN TAKEN FROM SURVEY TITLED, "PARCEL COMPILATION SURVEY DEPICTING LAND OF MBIA INSURANCE CORP.," PREPARED BY JOHN MEYER CONSULTING, DATED 09/30/2005 AND SUPPLEMENTED WITH SURVEY TITLED, "TOPOGRAPHIC SURVEY," PREPARED BY JMC PLANNING, ENGINEERING, LANDSCAPE ARCHITECTURE & LAND SURVEYING, PLLC, DATED 02/10/2022.
2. THE WETLANDS DEPICTED ON THIS PLAN WERE DELINEATED BY ECOLOGICAL SOLUTIONS, LLC ON 07/10/2018 AND CONFIRMED BY THE TOWN WETLAND CONSULTANT ON 10/01/2020.
3. ALL PLANT MATERIAL SHALL BE FIRST QUALITY STOCK. PLANTED MATERIAL AND METHODS OF INSTALLATION SHALL CONFORM TO THE AMERICAN NURSERY AND LANDSCAPE ASSOCIATION, AMERICAN STANDARD FOR NURSERY STOCK, LATEST EDITION.
4. ALL AREAS OF THE SITE NOT OCCUPIED BY BUILDING OR PAVEMENT AND NOT SPECIFIED AS BEING PLANTED WITH TREES, SHRUBS OR GROUND COVER SHALL BE LAWN.
5. ALL PLANTING BEDS SHALL BE MULCHED WITH 3" OF BROWN MULCH. MULCH SHALL BE CLEAN, NON-DYED, TOXIC FREE, SHREDDED HARDWOOD.
6. PLANT MATERIALS AS SPECIFIED ON THE DRAWINGS AND DELIVERED TO THE SITE SHALL BE NURSERY GROWN AND CERTIFIED TRUE TO THEIR GENUS, SPECIES AND VARIETY. SUBSTITUTIONS ARE NOT PERMITTED WITHOUT THE PROJECT LANDSCAPE ARCHITECTS WRITTEN APPROVAL.
7. ALL LANDSCAPING SHALL CONTINUE TO BE MAINTAINED IN A HEALTHY GROWING CONDITION THROUGHOUT THE DURATION OF THE PROJECT. ANY PLANTING NOT SO MAINTAINED SHALL BE REPLACED WITH NEW PLANTS AT THE BEGINNING OF THE NEXT, IMMEDIATELY FOLLOWING, GROWING SEASON.
8. ALL TREES AND SHRUBS SHALL BE PRUNED AND SHAPED AND BE SUBJECT TO THE APPROVAL OF THE PROJECT LANDSCAPE ARCHITECT AND GOVERNMENTAL AUTHORITIES HAVING JURISDICTION.
9. PLANTING STOCK SHALL BE WELL-BRANCHED AND WELL-FORMED, SOUND, VIGOROUS, HEALTHY, FREE FROM DISEASE, SUN-SCALE, WINDBURN, ABRASION, AND HARMFUL INSECTS OR INSECTS EGGS; AND SHALL HAVE HEALTHY, NORMAL UNBROKEN ROOT SYSTEMS. DECIDUOUS TREES AND SHRUBS SHALL BE SYMMETRICALLY DEVELOPED, OF UNIFORM HABIT OF GROWTH, WITH STRAIGHT TRUNKS OR STEMS, AND FREE FROM OBJECTIONABLE DISFIGUREMENTS. EVERGREEN TREES AND SHRUBS SHALL HAVE WELL-DEVELOPED SYMMETRICAL TOPS WITH TYPICAL SPREAD OF BRANCHES FOR EACH PARTICULAR SPECIES OR VARIETY. ONLY VINES AND GROUND COVER PLANTS WELL ESTABLISHED IN REMOVAL CONTAINERS, INTEGRAL CONTAINERS, OR FORMED HOMOGENEOUS SOIL SECTIONS SHALL BE USED. PLANTS SHALL BE GROWN UNDER CLIMATIC CONDITIONS SIMILAR TO THOSE IN THE LOCALITY OF THE PROJECT.
10. ALL STOCK SHALL BE BALLED AND BURLAPPED OR CONTAINER GROWN STOCK, UNLESS OTHERWISE SPECIFIED. BAREROOT STOCK OF ANY KIND IS UNACCEPTABLE UNLESS SPECIFIED.
11. ALL PLANTING BEDS, LAWNS AND LANDSCAPED AREAS SHALL RECEIVE A MINIMUM 4" THICK LAYER OF TOPSOIL, UNLESS OTHERWISE SPECIFIED

WETLAND MITIGATION SUMMARY

TOTAL WETLANDS AREA WITHIN PROJECT SITE:	10,682 S.F.
TOTAL WETLAND ADJACENT AREA WITHIN PROJECT SITE:	76,426 S.F.
DISTURBANCE WITHIN WETLAND:	0 S.F.
DISTURBANCE WITHIN WETLAND ADJACENT AREA:	7,696 S.F.
PROPOSED MITIGATION AREA WITHIN WETLAND ADJACENT AREA:	13,159 S.F.
PROPOSED MITIGATION AREA OUTSIDE OF WETLAND ADJACENT AREA:	2,241 S.F.
TOTAL MITIGATION AREA:	15,400 S.F.

MITIGATION RATIO: 15,400 S.F. / 7,696 S.F. = 2:1

GENERAL MAINTENANCE/MONITORING SCHEDULE FOR PLANTING OF WETLAND MITIGATION AREA:

1. INSPECT PLANTING AREAS ONCE ANNUALLY FOR A PERIOD OF THREE YEARS TO SELECTIVELY REMOVE, BY HAND, UNWANTED INVASIVE PLANTS (WEEDS).
2. REMOVAL OF LEAF LITTER SHOULD BE LIMITED TO HAND CLEARING OF SEEDED AND PLANTED AREAS.
3. AT THE THREE YEAR PERIOD, SHOULD LESS THAN 80% OF PLANTING INSTALLED REMAIN, THE PROPERTY OWNER IS TO REPLACE DEAD PLANTING IN KIND TO ACHIEVE A MINIMUM OF 80% PLANT STOCK.

SEED MIXES:

SEED MIX #1

1. WETLAND RESTORATION SEED MIX SHALL BE ERNST FACW WETLAND MEADOW MIX

   SEEDING RATE: 20 LB PER ACRE, OR 1/2 LB PER 1,000 SQ FT WITH A COVER CROP. FOR A COVER CROP USE ONE OF THE FOLLOWING: GRAIN RYE (1 SEP TO 30 APR; 30 LBS/ACRE), JAPANESE MILLET (1 MAY TO 31 AUG; 10 LBS/ACRE), OR BARNYARD GRASS (1 MAY TO 31 AUG; 10 LBS/ACRE).

SEED MIX #2

2. DETENTION BASIN SEED MIX SHALL BE ERNST NATIVE DETENTION AREA MIX ITEM NUMBER: ERNMX-183

   SEEDING RATE: 20 LB PER ACRE, OR 1/2 LB PER 1,000 SQ FT FOR A COVER CROP: GRAIN RYE (1 SEP TO 30 APR; 30 LBS/ACRE), JAPANESE MILLET (1 MAY TO 31 AUG; 10 LBS/ACRE). GRASSES & GRASS-LIKE SPECIES-HERBACEOUS PERENNIAL; STORMWATER MANAGEMENT

3. SLOPE SEED MIX SHALL BE ERNST NATIVE STEEP SLOPE MIX W/GRAIN RYE ITEM NUMBER: ERNMX-181-2 WHICH SHALL BE INSTALLED ON ALL SLOPES 3 HORIZONTAL TO 1 VERTICAL OR GREATER, EXCEPT IN LOCATIONS BETWEEN TOWNHOME UNITS, AND/OR AS DIRECTED BY PROJECT ENGINEER/LANDSCAPE ARCHITECT.

   SEEDING RATE: 75 LB PER ACRE EROSION CONTROL & REVEGETATION; GRASSES & GRASS-LIKE SPECIES – HERBACEOUS PERENNIAL; HERBACEOUS FLOWERING SPECIES – HERBACEOUS PERENNIAL USE THIS FORMULA WITH GRAIN RYE AS A COVER CROP (FROM AUGUST 1ST-FEBRUARY 15TH).

LEGEND

- EXISTING PROPERTY LINE
- ADJACENT PROPERTY LINE
- EXISTING SETBACK LINE
- EXISTING WETLAND LINE AND DELINEATION (WLF-63, WLF-64, WLF-65)
- EXISTING BUILDING OVERHANG
- EXISTING BUILDING LINE
- EXISTING PAVEMENT EDGE
- EXISTING CURB LINE
- EXISTING STONE WALL
- EXISTING RETAINING WALL
- EXISTING GUIDE RAIL
- EXISTING FENCE
- EXISTING TREE AND DESIGNATION (T10 M)
- EXISTING TREE LINE
- EXISTING DIRECTIONAL ARROWS
- EXISTING PAINT
- EXISTING UTILITY POLE
- EXISTING LIGHT POLE
- EXISTING SIGN
- EXISTING FEATURE TO BE REMOVED
- PROPOSED BUILDING LINE
- PROPOSED CONCRETE CURB
- PROPOSED SAWCUT LINE
- PROPOSED CONCRETE SIDEWALK
- PROPOSED MONOLITHIC CONCRETE SIDEWALK & CURB
- PROPOSED DROP CURB AND RAMP
- PROPOSED HEAVY DUTY PAVEMENT
- PROPOSED PERVIOUS PAVEMENT
- PROPOSED CONCRETE APRON
- PROPOSED MULCH TRAIL
- PROPOSED RETAINING WALL (DESIGN BY OTHERS)
- PROPOSED FENCE
- PROPOSED DOUBLE ARM LIGHTING STANDARD (DESIGN BY OTHERS)
- PROPOSED SINGLE ARM LIGHTING STANDARD (DESIGN BY OTHERS)
- 2-4" WIDE YELLOW LINES 8"O.C.
- 12" WIDE WHITE STOP LINE
- TRAFFIC SIGN LOCATION & DESIGNATION
- PROPOSED SHADE TREE
- PROPOSED FLOWERING TREE
- PROPOSED CONIFEROUS TREE
- PROPOSED SHRUBS

PLANT SCHEDULE

CODE	QTY	BOTANICAL / COMMON NAME	SIZE	ROOT COND.	REMARKS
EVERGREEN TREES					
ACC	93	Abies concolor / White Fir	6` - 8` HT.	B & B	
JV	84	Juniperus virginiana / Eastern Redcedar	6` - 7` HT.	B & B	
PA	85	Picea abies / Norway Spruce	8`-10` HT	B & B	
PG	69	Picea glauca / White Spruce	8`-10` HT	B & B	
PS	83	Pinus strobus / White Pine	6` - 8` HT.	B & B	
TO	123	Thuja x 'Green Giant' / Green Giant Arborvitae	6` - 8` HT.	B & B	
FLOWERING & UNDERSTORY TREES					
AC	117	Amelanchier canadensis / Shadblow Serviceberry	8` - 10` HT.	B & B	
BN	24	Betula nigra `Heritage` / Heritage River Birch	7`-8` HT.	B & B	
CC	59	Cercis canadensis / Eastern Redbud Multi-trunk	8` - 10` HT.	B & B	
CFW	40	Cornus florida 'White' / White Flowering Dogwood	8` - 10` HT.	B & B	
CFR	36	Cornus florida rubra / Pink Flowering Dogwood	8` - 10` HT.	B & B	
DECIDUOUS TREES					
AG	34	Acer rubrum `October Glory` / October Glory Maple	3" - 3 1/2" Cal.	B & B	
AB2	16	Acer rubrum 'Bowhall' / Bowhall Red Maple	2 1/2" - 3" CAL.	3"Cal	
AR	41	Acer rubrum 'Red Sunset' / Red Maple 'Red Sunset'	3" - 3 1/2" Cal.	B & B	
LS2	6	Liquidambar styraciflua / Sweet Gum	2" - 2 1/2" CAL.	B & B	
LS	18	Liquidambar styraciflua 'Slender Silhouette' / Slender Silhouette Sweet Gum	2" - 2 1/2" CAL.	B & B	
NS	23	Nyssa sylvatica / Black gum	2" - 2 1/2" CAL.	B & B	
PO	7	Platanus occidentalis / American Sycamore	3" - 3 1/2" CAL.	B & B	
PR	9	Prunus serotina / Black Cherry	2" - 2 1/2" CAL.	B & B	
QA	11	Quercus alba / White Oak	2" - 3 1/2" CAL.	B & B	
QB	13	Quercus bicolor / Swamp White Oak	2" - 2 1/2" CAL.	B & B	
QM2	10	Quercus macrocarpa / Burr Oak	2 1/2" - 3" CAL.	B & B	
QP	33	Quercus palustris / Pin Oak	2" - 3 1/2" CAL.	B & B	
QR	27	Quercus rubra / Red Oak	2" - 3 1/2" CAL.	B & B	
TD	8	Taxodium distichum / Bald Cypress	2 1/2" - 3" CAL.	B & B	
UA	9	Ulmus americana / American Elm 'Princeton'	3" - 3 1/2" CAL.	B & B	

APPROVED BY TOWN OF NORTH CASTLE PLANNING BOARD RESOLUTION, DATED ________

________ DATE: ________
CHRISTOPHER CARTHY, CHAIRMAN,
TOWN OF NORTH CASTLE PLANNING BOARD

ENGINEERING PLANS REVIEWED FOR CONFORMANCE TO RESOLUTION

________ DATE: ________
JOSEPH M. CERMELE, PE
KSCJ CONSULTING
CONSULTING TOWN ENGINEERS

No.	Revision	Date	By
1.	REVISED FEIS	01/20/2023	BMS
2.	PLANNING BOARD SUBMISSION	10/06/2023	BMS
3.	TOWN CONSERVATION BOARD SUBMISSION	10/31/2023	BMS
4.	PLANNING BOARD RESUBMISSION	11/10/2023	BMS
5.	ARB SUBMISSION	11/22/2023	BMS
6.	PLANNING BOARD RESUBMISSION	12/21/2023	BMS

Previous Editions Obsolete

APPLICANT/OWNER:
AIRPORT CAMPUS I-V LLC
46 WESTCHESTER AVENUE
POUND RIDGE, NY 10576

JMC Planning, Engineering, Landscape Architecture & Land Surveying, PLLC
JMC Site Development Consultants, LLC
John Meyer Consulting, Inc.
120 BEDFORD ROAD • ARMONK, NY 10504
voice 914.273.5225 • fax 914.273.2102
www.jmcpllc.com

JMC

LANDSCAPE PLAN

AIRPORT CAMPUS
113 KING STREET (NY ROUTE 120)
NORTH CASTLE, NY 10504

ANY ALTERATION OF PLANS, SPECIFICATIONS, PLATS AND REPORTS BEARING THE SEAL OF A LICENSED PROFESSIONAL ENGINEER OR LICENSED LAND SURVEYOR IS A VIOLATION OF SECTION 7209 OF THE NEW YORK STATE EDUCATION LAW, EXCEPT AS PROVIDED FOR BY SECTION 7209, SUBSECTION 2.

STATE OF NEW YORK • DAVID P. LOMBARDI • 071001 • LICENSED PROFESSIONAL ENGINEER

Drawn: JJ	Approved: AG
Scale: 1" = 40'	
Date: 09/21/2022	
Project No: 15072	
15072-LAND	L-102	LAND.scr
Drawing No: L-102	

COPYRIGHT © 2023 by JMC All Rights Reserved. No part of this document may be reproduced, stored in a retrieval system, or transmitted in any form or by means, electronic, mechanical, photocopying, recording or otherwise, without the prior written permission of JMC PLANNING, ENGINEERING, LANDSCAPE ARCHITECTURE & LAND SURVEYING, PLLC | JMC SITE DEVELOPMENT CONSULTANTS, LLC | JOHN MEYER CONSULTING, INC. (JMC). Any modifications or alterations to this document without the written permission of JMC shall render them invalid and unusable.

NOT FOR CONSTRUCTION

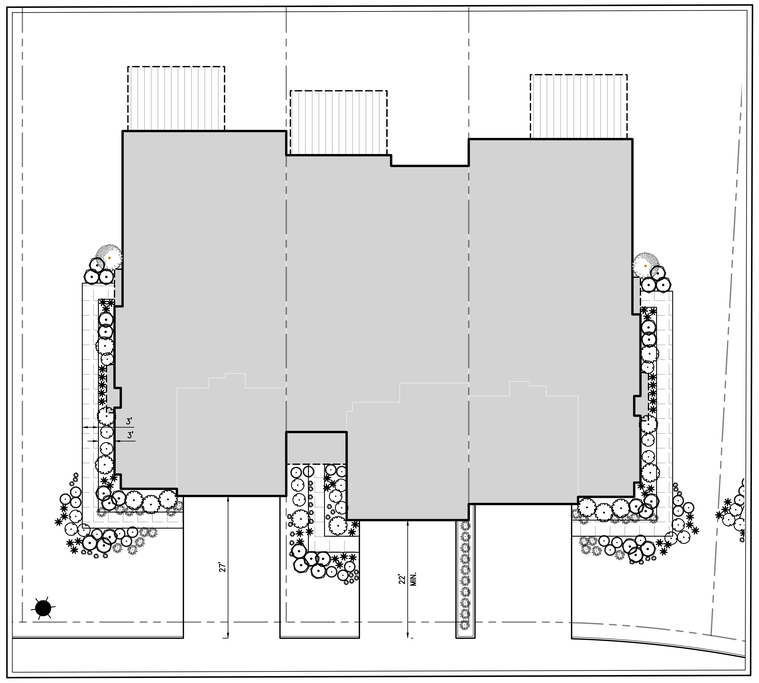

3–UNIT TYPICAL FOUNDATION PLANTING

PROPOSED PLANTING SCHEDULE FOR UNITS

Symbol	Upright Evergreen Tree/Shrub 4' -5' HT.	Common Name
	Ilex x aquipernyi 'Meschick' 'Dragon Lady	Dragon Lady Holly
	Ilex crenata 'Steeds'	Steeds Holly
	Juniperus scopulorum 'Moonglow'	Moonglow Juniper
	Thuja occidentalis 'Smaragd'	Emerald Green Giant Arborvitae
Symbol	**Shrub A - Medium Evergreen - 3 Gal.**	**Common Name**
	Ilex glabra ' Shamrock'	Shamrock Inkberry
	Ilex x meservae 'Blue Princess' plant with (1) male	Blue Princess Holly (Female)
	Ilex x meservae 'Blue Prince' plant -pollinator	Blue Prince Holly (Male)
	Prunus lauroceraus 'Otto Luyken'	Otto Luyken Cherry Laurel
	Rhododendron x 'PJM'	PJM Rhododendron
Symbol	**Shrub B - Small Evergreen - 2 Gal.**	**Common Name**
	Azalea 'Encore Autumn Cheer'	Autumn Cheer Encore Azalea
	Ilex crenata 'Soft Touch'	Soft Touch Japanese Holly
	Ilex glabra ' Strongbox'	Dwarf Inkberry
	Pieris cultivar 'Cavatine'	Dwarf Japanese Andromeda
	Juniperus Tortuga	Tortuga juniper
Symbol	**Shrub C - Medium Decidous - 3 Gal.**	**Common Name**
	Hydrangea arborescens 'Invincibelle'	Invinicibelle Ruby Smooth Hydrangea
	Hydrangea paniculata 'Little Lime'	Little Lime Hydrangea
	Itea virginigia 'Little Henry'	Little Henry Sweetspire
	Rosa rugosa 'Knockout White'	White Knockout Roses
	Physocarpus opulifolius 'Summer Wine' or Coppertina'	Ninebark cultivar
	Weigela ' Wine and Roses'	Wine and Roses Weiglia
Symbol	**Shrub D - Small Decidous - 2 Gal.**	**Common Name**
	Aronia melanocarpa 'Low Scape Mound'	Invinicibelle Ruby Smooth Hydrangea
	Hydrangea paniculata 'Little Lime'	Little Lime Hydrangea
	Itea virginigia 'Fizzy Mizzy'	Little Henry Sweetspire
	Rosa rugosa 'Knockout White'	White Knockout Roses
	Physocarpus opulifolius 'Summer Wine' or Coppertina'	Ninebark cultivar
Symbol	**Perennials - 2 Gal.**	**Common Name**
	Sun/Part Shade	
	Alchemilla mollis 'Thriller'	Lady's Mantle
	Carex everillo	Japanese Sedge
	Coreopsis verticillata 'Moonbeam'	Tickweed
	Echinacea purpurea	Pink Cone Flower
	Nepata mussini 'Little Trudy' or Walkers' Low'	Catmint
	Rudbekia fulgida var. 'Little Goldstart'	Blackeyed Susan
	Sedum 'Black Beauty'	Black Beauty Sedum
	Part Shade/Full Shade	
	Astillbe arendsii ' Federsee' or 'Amethyst'	Astillbe - Pink
	Bergenia cordifolia	Heartleaf Bergenia
	Geranium macrorrhizum 'Bevan's Variety'	Cranesbill Geranium
	Heuchera x 'Plum Pudding'	Coral Bells
	Fern varieties	Ferns
Symbol	**Ornamental Grasses/Perennials/Ground Covers - 1 Gal.**	**Common Name**
	Sun/Part Shade	
	Pennisetum alopecuriodes ' Hameln' or 'Piglet'	Dwarf Fountain Grass
	Carex morrowii 'Ice Dance'	Japanese Sedge
	Dianthus gratianopolitanus 'Bath's Pink'	Bath's Pink Carnation
	Sedum x 'Vera Jameson'	Creeping sedum
	Thymus Elfin	Creeping thyme
	Part Shade/Full Shade	
	Hakonechloa macra 'Aureola'	Golden Hakone Grass
	Phlox stolonifera	Creeping Phlox
	Sedum Ternatum	Wild Stonecrop
	Tiarella ' Sugar and Spice'	Foam Flower

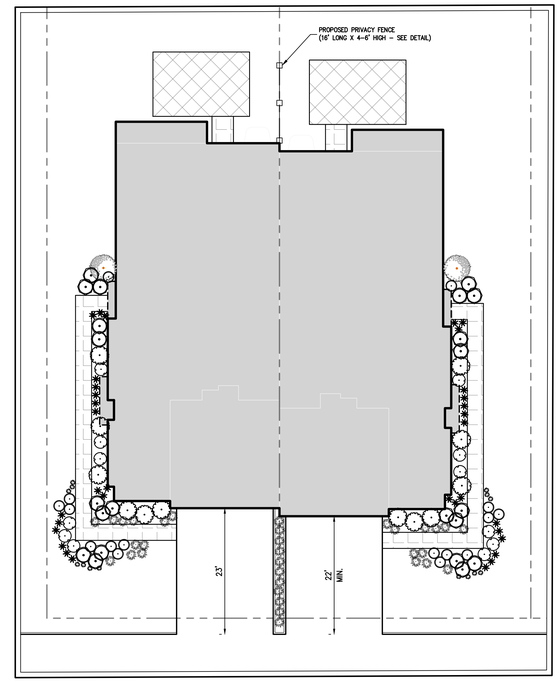

2–UNIT TYPICAL FOUNDATION PLANTING

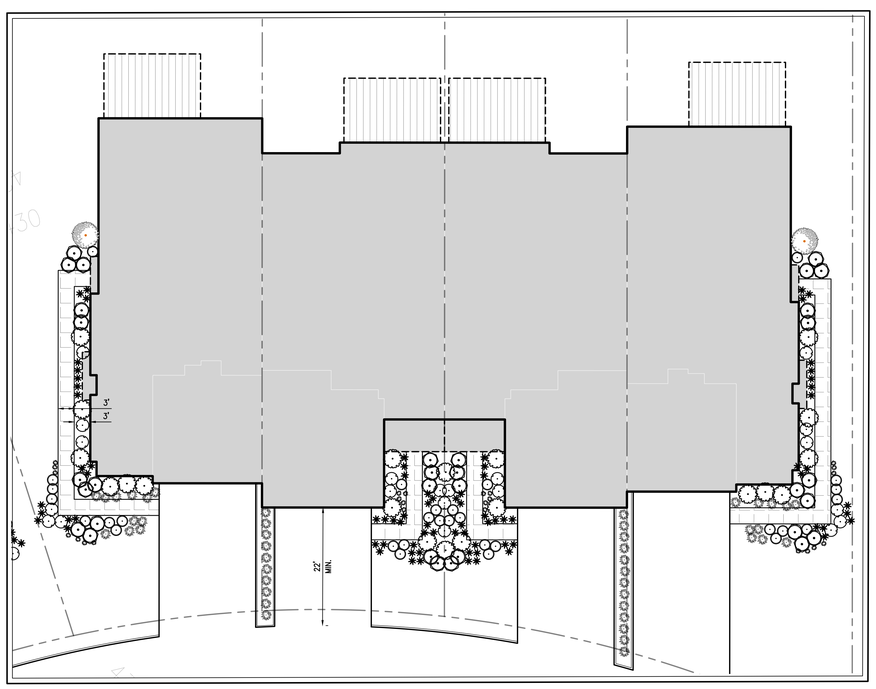

4–UNIT TYPICAL FOUNDATION PLANTING

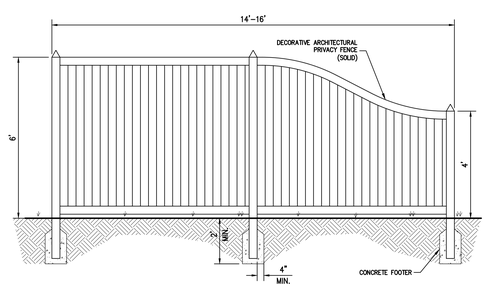

EXTERIOR PRIVACY FENCE DETAIL
(N.T.S.)

PLANT LEGEND

- UPRIGHT EVERGREEN
- SHRUB A – MEDIUM EVERGREEN SHRUB
- SHRUB B – SMALL EVERGREEN SHRUB
- SHRUB C – MEDIUM DECIDUOUS SHRUB
- SHRUB D – SMALL DECIDUOUS SHRUB
- PERENNIALS
- ORNAMENTAL GRASSES/ GROUNDCOVERS

TYPICAL UNIT PLANTING NOTES:

1. LAYOUT OF PLANTING BED IS CONCEPTUAL AND MAY VARY DUE TO EXISTING SITE CONDITIONS AND MODEL ELEVATION. SPECIES CHOSEN SHALL CORRELATE WITH EXISTING SITE CONDITIONS OF EACH HOME (IE; SUN/SHADE) TO ENSURE SURVIVABILITY OF PLANT.
2. SHRUBS SHALL BE PLANTED IN GROUPS OF THE SAME SPECIES (3–5 PLANTS) TO MAINTAIN BALANCE THROUGHOUT THE GARDEN.
3. FOUNDATION PLANTS ARE IN ADDITION TO AND ARE TO BE COORDINATED WITH PROPOSED STREET TREES, OPEN SPACE PLANTINGS AND EXISTING VEGETATION TO REMAIN.
4. QUALITY OF PLANT SHALL BE IN ACCORDANCE WITH THE AMERICAN STANDARDS FOR NURSERY STOCK.
5. SUBSTITUTIONS PERMITTED WITH WRITTEN APPROVAL BY OWNER'S LANDSCAPE ARCHITECT AND TOWN REPRESENTATIVE PRIOR TO PLANTING.

APPROVED BY TOWN OF NORTH CASTLE PLANNING BOARD RESOLUTION, DATED _____

_____ DATE: _____
CHRISTOPHER CARTHY, CHAIRMAN,
TOWN OF NORTH CASTLE PLANNING BOARD

ENGINEERING PLANS REVIEWED FOR CONFORMANCE TO RESOLUTION

_____ DATE: _____
JOSEPH M. CERMELE, PE
KSCJ CONSULTING
CONSULTING TOWN ENGINEERS

GRAPHIC SCALE
20 0 10 20 40 80
(IN FEET)
1 inch = 10 ft.

No.	Revision	Date	By
1.	PLANNING BOARD SUBMISSION	10/06/2023	BMS
2.	TOWN CONSERVATION BOARD SUBMISSION	10/31/2023	BMS
3.	PLANNING BOARD RESUBMISSION	11/10/2023	BMS
4.	ARB SUBMISSION	11/22/2023	BMS
5.	PLANNING BOARD RESUBMISSION	12/21/2023	BMS

Previous Editions Obsolete

APPLICANT/OWNER:
AIRPORT CAMPUS I-V LLC
46 WESTCHESTER AVENUE
POUND RIDGE, NY 10576

JMC Planning, Engineering, Landscape Architecture & Land Surveying, PLLC
JMC Site Development Consultants, LLC
John Meyer Consulting, Inc.
120 BEDFORD ROAD • ARMONK, NY 10504
voice 914.273.5225 • fax 914.273.2102
www.jmcpllc.com

TYPICAL UNIT LANDSCAPE PLAN
AIRPORT CAMPUS
113 KING STREET (NY ROUTE 120)
NORTH CASTLE, NY 10504

ANY ALTERATION OF PLANS, SPECIFICATIONS, PLATS AND REPORTS BEARING THE SEAL OF A LICENSED PROFESSIONAL ENGINEER OR LICENSED LAND SURVEYOR IS A VIOLATION OF SECTION 7209 OF THE NEW YORK STATE EDUCATION LAW, EXCEPT AS PROVIDED FOR BY SECTION 7209, SUBSECTION 2.

STATE OF NEW YORK • DAVID P. LOMBARDI • 071001 • LICENSED PROFESSIONAL ENGINEER

Drawn:	DK	Approved:	AG
Scale:	1" = 10'		
Date:	09/25/2023		
Project No:	15072		
15072-LAND	L-103	LAND.scr	
Drawing No:	L–103		

NOT FOR CONSTRUCTION

COPYRIGHT © 2023 by JMC All Rights Reserved. No part of this document may be reproduced, stored in a retrieval system, or transmitted, in any form or by means, electronic, mechanical, photocopying, recording or otherwise, without the prior written permission of JMC PLANNING, ENGINEERING, LANDSCAPE ARCHITECTURE & LAND SURVEYING, PLLC (JMC). Any modifications or alterations to this document without the written permission of JMC shall render them invalid and unusable.
DISCLAIMER: SITE ENGINEER'S TOTAL FILE, JMC

LEGEND

- EXISTING PROPERTY LINE
- ADJACENT PROPERTY LINE
- EXISTING SETBACK LINE
- EXISTING EASEMENT LINE
- EXISTING ROADWAY CENTER LINE
- WLF-63 WLF-64 WLF-65 EXISTING WETLAND LINE AND DELINEATION
- EXISTING BUILDING OVERHANG
- EXISTING BUILDING LINE
- EXISTING PAVEMENT EDGE
- EXISTING CURB LINE
- EXISTING STONE WALL
- EXISTING RETAINING WALL
- EXISTING FENCE
- EXISTING TREE
- EXISTING TREE LINE
- EXISTING PAINT
- EXISTING PARKING WITH NUMBER OF SPACES
- EXISTING ACCESSIBLE PARKING WITH NUMBER OF SPACES
- EXISTING PEDESTRIAN CROSSING
- EXISTING UTILITY POLE
- EXISTING LIGHT POLE
- EXISTING SIGN
- PROPOSED SUBDIVISION LINE
- EXISTING BUILDING TO REMAIN
- PROPOSED BUILDING
- PROPOSED YARD SETBACK
- PROPOSED CONCRETE CURB
- PROPOSED DROP CURB & RAMP
- PROPOSED SAWCUT LINE
- 2H PROPOSED ACCESSIBLE PARKING SPACES WITH NUMBER OF SPACES INDICATED (REFER TO STRIPING DETAILS)
- 5 PROPOSED PARKING SPACES WITH NUMBER OF SPACES INDICATED (REFER TO STRIPING DETAILS)
- PROPOSED CONCRETE SIDEWALK
- PROPOSED MONOLITHIC CONCRETE SIDEWALK & CURB
- PROPOSED DROP CURB AND RAMP
- PROPOSED PAVEMENT
- PROPOSED TOWNHOME PATIO/DECK
- PROPOSED CONCRETE
- PROPOSED IRREVOCABLE CONSERVATION EASEMENT
- PROPOSED RETAINING WALL (DESIGN BY OTHERS)
- PROPOSED FENCE
- PROPOSED 12" WIDE WHITE STOP LINE
- TRAFFIC SIGN LOCATION & DESIGNATION
- PROPOSED LIGHT POLE LOCATIONS
- PROPOSED HYDRANT
- TOWN REGULATED STEEP SLOPES
- STEEP SLOPES DISTURBANCE

ZONING COMPLIANCE TABLE

SECTION 113.04, BLOCK 1, LOTS 13, 14 & 20
SECTION 118.02, BLOCK 1, LOT 1
PROPOSED USE: AIRPORT CAMPUS RESIDENTIAL DEVELOPMENT
FIRE DISTRICT: ARMONK FIRE DEPARTMENT (NORTH CASTLE FIRE DISTRICT #2)
SCHOOL DISTRICT: BYRAM HILLS CENTRAL SCHOOL DISTRICT
SEWER DISTRICT: SD3

R-MF-SCH (MULTIFAMILY SENIOR CITIZEN HOUSING DISTRICT)	R-MF-SCH REQUIREMENT	PROVIDED
MINIMUM LOT AREA	4.0 ACRES(1)	4.49 ACRES(2)
NET LOT AREA	–	3.62 ACRES
MINIMUM PERIMETER FRONT YARD SETBACKS	185 FEET(1)	185 FT
MINIMUM PERIMETER REAR YARD SETBACKS	14 FEET(1)	14 FT
MINIMUM PERIMETER SIDE YARD SETBACKS	46 FEET(1)	46 FT
MINIMUM LOT FRONTAGE	110 FEET(1)	117 FT
MINIMUM LOT WIDTH	500 FEET(1)	655 FT
MINIMUM LOT DEPTH	265 FEET(1)	265 FT
MAXIMUM BUILDING COVERAGE	25 PERCENT(1)	19.0 PERCENT
MAXIMUM BUILDING HEIGHT	2.5 STORIES / 30 FEET	3 STORIES + PENTHOUSE / ±51.7 FEET (EXISTING)
MAXIMUM FLOOR AREA RATIO	0.80(1)	0.70
PARKING	95(3)	106

R-MF-A (MULTIFAMILY DISTRICT)	R-MF-A PERIMETER REQUIREMENT	PROVIDED
MINIMUM LOT AREA	5 ACRES	34.30 ACRES
NET LOT AREA	–	33.81 ACRES
MINIMUM FRONT YARD SETBACKS	10 FEET	64 FEET
MINIMUM REAR YARD SETBACKS	25 FEET	25 FEET
MINIMUM SIDE YARD SETBACKS	10 FEET	32 FEET
MAXIMUM BUILDING COVERAGE	20 PERCENT	17.8 PERCENT
MAXIMUM BUILDING HEIGHT	3 STORIES / 30 FEET	2 STORIES / 29 FEET
DENSITY	105.2 DENSITY UNITS (1 DU/14,000 SF)(4)	83.3 DENSITY UNITS
PARKING	256(5)	286(6)

R-MF-A (MULTIFAMILY DISTRICT)	R-MF-A ATTACHED REQUIREMENT	PROVIDED
MINIMUM LOT AREA	2,500 SQUARE FEET	> 2,500 SQUARE FEET
MINIMUM FRONT YARD SETBACKS	10 FEET	> 10 FEET
MINIMUM REAR YARD SETBACKS	10 FEET	> 10 FEET
MINIMUM SIDE YARD SETBACKS	0 FEET	0 FEET
MAXIMUM BUILDING COVERAGE	50 PERCENT	< 50 PERCENT
MAXIMUM BUILDING HEIGHT	3 STORIES / 30 FEET	2 STORIES / 29 FEET

TABLE OF LAND USE NOTES

(1) AS DETERMINED BY THE TOWN BOARD RESOLUTION, DATED AUGUST 9, 2023.
(2) LOT AREA INCLUDES 0.24 ACRE WATER TANK LOT.
(3) APARTMENT PARKING REQUIREMENT: 2 SPACES PER DWELLING UNIT, PLUS ½ PER EACH BEDROOM IN EXCESS OF 2 BEDROOMES, PLUS 10% FOR VISITOR PARKING.
(4) AS REQUIRED BY §355-25
(5) TOWNHOME PARKING REQUIREMENT: 2 SPACES REQUIRED FOR EACH MARKET RATE TOWNHOME UNIT AND 1 SPACE FOR EACH UNIT PLUS ½ FOR EACH BEDROOM FOR AFFH UNIT.
(6) PARKING PROVIDED FOR EACH MARKET RATE RESIDENTIAL TOWNHOME UNIT INCLUDES 2 DRIVEWAY SPACES AND FOR EACH AFFH RESIDENTIAL TOWNHOME UNIT INCLUDES 2 SPACES AND ½ SPACE ALONG THE ROADWAYS (2 ½ SPACES PER UNIT TOTAL). 20 SPACES ARE PROVIDED NEAR THE PROPOSED CLUBHOUSE AND 16 ADDITIONAL SPACES ARE PROVIDED ALONG THE ROADWAYS (6 SPACES FOR AFFH UNITS AND 10 GUEST SPACES). IN ADDITION, 238 GARAGE SPACES ARE PROVIDED, WHICH ARE NOT INCLUDED IN THE PROVIDED PARKING COUNTS.

STEEP SLOPES SUMMARY		
ZONING DISTRICT	STEEP SLOPES (25% AND GREATER)	STEEP SLOPES DISTURBANCE
R-MF-SCH	0 SF (0.00 ACRE)	0 SF (0.00 ACRE)
R-MF-A	17,638 SF (0.40 ACRE)	2,011 SF (0.05 ACRE)

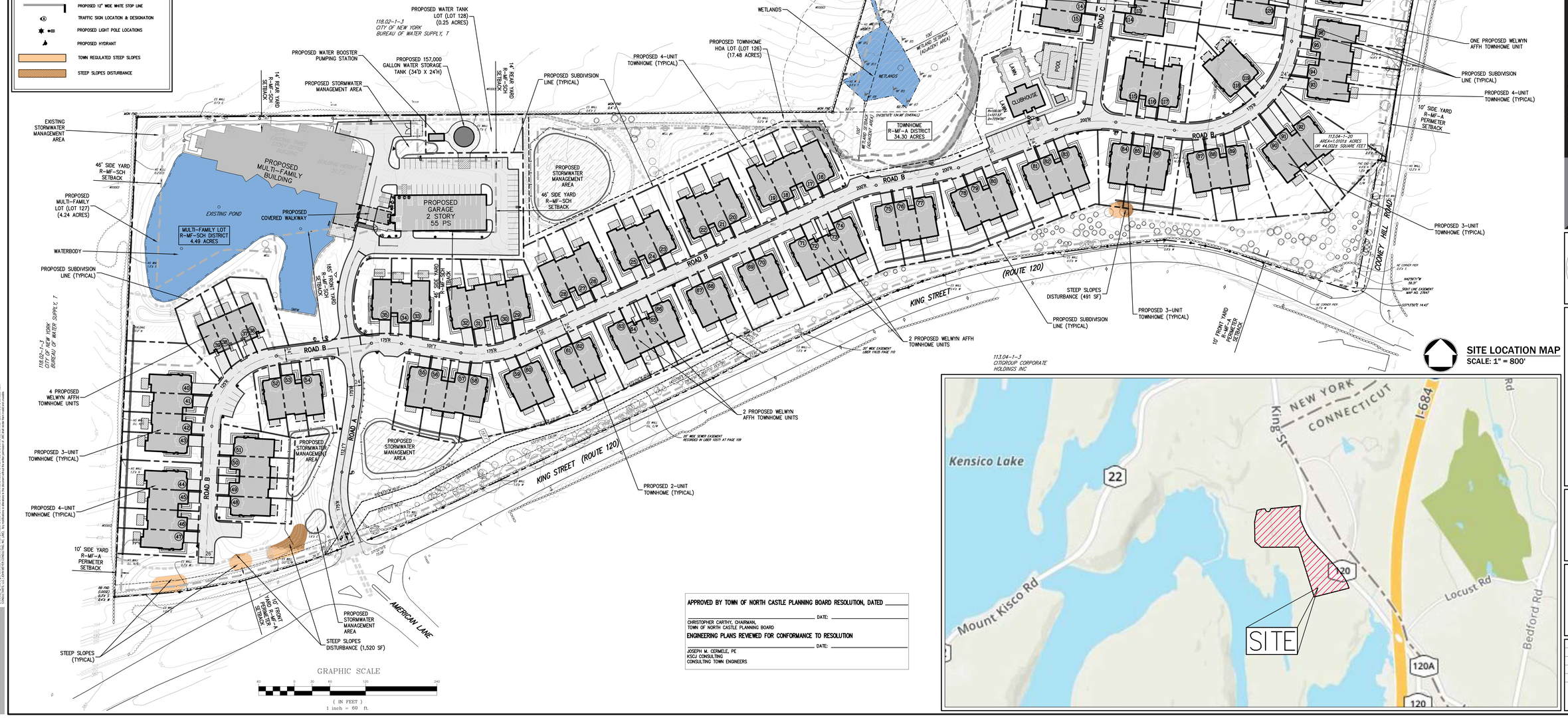

APPROVED BY TOWN OF NORTH CASTLE PLANNING BOARD RESOLUTION, DATED _____

_____ DATE: _____
CHRISTOPHER CARTHY, CHAIRMAN,
TOWN OF NORTH CASTLE PLANNING BOARD

ENGINEERING PLANS REVIEWED FOR CONFORMANCE TO RESOLUTION

_____ DATE: _____
JOSEPH M. CERMELE, PE
KSCJ CONSULTING
CONSULTING TOWN ENGINEERS

NOT FOR CONSTRUCTION

COPYRIGHT © 2023 by JMC All Rights Reserved. No part of this document may be reproduced, stored in a retrieval system, or transmitted, in any form or by means, electronic, mechanical, photocopying, recording or otherwise, without the prior written permission of JMC PLANNING, ENGINEERING, LANDSCAPE ARCHITECTURE & LAND SURVEYING, PLLC | JMC SITE DEVELOPMENT CONSULTANTS, LLC. Any modifications or alterations to this document without the written permission of JMC shall render them invalid and unusable.

No.	Revision	Date	By
1.	PLANNING BOARD SUBMISSION	10/06/2023	BMS
2.	PLANNING BOARD RESUBMISSION	11/10/2023	BMS
3.	PLANNING BOARD RESUBMISSION	12/21/2023	BMS

Previous Editions Obsolete

APPLICANT/OWNER:
AIRPORT CAMPUS I-V LLC
40 WESTCHESTER AVENUE
POUND RIDGE, NY 10576

JMC Planning, Engineering, Landscape Architecture & Land Surveying, PLLC
JMC Site Development Consultants, LLC
John Meyer Consulting, Inc.
120 BEDFORD ROAD • ARMONK, NY 10504
voice 914.273.5225 • fax 914.273.2102
www.jmcpllc.com

SITE LOCATION MAP
SCALE: 1" = 800'

INTEGRATED PLOT PLAN

AIRPORT CAMPUS
113 KING STREET (NY ROUTE 120)
NORTH CASTLE, NY 10504

ANY ALTERATION OF PLANS, SPECIFICATIONS, PLATS AND REPORTS BEARING THE SEAL OF A LICENSED PROFESSIONAL ENGINEER OR LICENSED LAND SURVEYOR IS A VIOLATION OF ARTICLE 145 OF THE NEW YORK STATE EDUCATION LAW, EXCEPT AS PROVIDED FOR BY SECTION 7209, SUBSECTION 2.

STATE OF NEW YORK • DAVID P. LOMBARDI • 071051 • LICENSED PROFESSIONAL ENGINEER

Drawn:	BMS	Approved:	AG
Scale:	1" = 60'		
Date:	10/06/2023		
Project No:	15072		
15072-COVER	IPP-1	COVER.scr	

Drawing No:
IPP-1

ZONING COMPLIANCE TABLE

SECTION 113.04, BLOCK 1, LOTS 13, 14 & 20
SECTION 118.02, BLOCK 1, LOT 1
PROPOSED USE: AIRPORT CAMPUS RESIDENTIAL DEVELOPMENT
FIRE DISTRICT: ARMONK FIRE DEPARTMENT (NORTH CASTLE FIRE DISTRICT #2)
SCHOOL DISTRICT: BYRAM HILLS CENTRAL SCHOOL DISTRICT
SEWER DISTRICT: SD3

R-MF-SCH (MULTIFAMILY SENIOR CITIZEN HOUSING DISTRICT)	R-MF-SCH REQUIREMENT	PROVIDED
MINIMUM LOT AREA	4.0 ACRES(1)	4.49 ACRES(2)
NET LOT AREA	–	3.62 ACRES
MINIMUM PERIMETER FRONT YARD SETBACKS	185 FEET(1)	185 FT
MINIMUM PERIMETER REAR YARD SETBACKS	14 FEET(1)	14 FT
MINIMUM PERIMETER SIDE YARD SETBACKS	46 FEET(1)	46 FT
MINIMUM LOT FRONTAGE	110 FEET(1)	117 FT
MINIMUM LOT WIDTH	500 FEET(1)	655 FT
MINIMUM LOT DEPTH	265 FEET(1)	265 FT
MAXIMUM BUILDING COVERAGE	25 PERCENT(1)	19.0 PERCENT
MAXIMUM BUILDING HEIGHT	2.5 STORIES / 30 FEET	3 STORIES + PENTHOUSE / ±51.7 FEET (EXISTING)
MAXIMUM FLOOR AREA RATIO	0.80(1)	0.70
PARKING	95(3)	106

R-MF-A (MULTIFAMILY DISTRICT)	R-MF-A PERIMETER REQUIREMENT	PROVIDED
MINIMUM LOT AREA	5 ACRES	34.30 ACRES
NET LOT AREA	–	33.81 ACRES
MINIMUM FRONT YARD SETBACKS	10 FEET	64 FEET
MINIMUM REAR YARD SETBACKS	25 FEET	25 FEET
MINIMUM SIDE YARD SETBACKS	10 FEET	32 FEET
MAXIMUM BUILDING COVERAGE	20 PERCENT	17.8 PERCENT
MAXIMUM BUILDING HEIGHT	3 STORIES / 30 FEET	2 STORIES / 29 FEET
DENSITY	105.2 DENSITY UNITS (1 DU/14,000 SF)(4)	83.3 DENSITY UNITS
PARKING	256(5)	286(6)

R-MF-A (MULTIFAMILY DISTRICT)	R-MF-A ATTACHED REQUIREMENT	PROVIDED
MINIMUM LOT AREA	2,500 SQUARE FEET	> 2,500 SQUARE FEET
MINIMUM FRONT YARD SETBACKS	10 FEET	> 10 FEET
MINIMUM REAR YARD SETBACKS	10 FEET	> 10 FEET
MINIMUM SIDE YARD SETBACKS	0 FEET	0 FEET
MAXIMUM BUILDING COVERAGE	50 PERCENT	< 50 PERCENT
MAXIMUM BUILDING HEIGHT	3 STORIES / 30 FEET	2 STORIES / 29 FEET

TABLE OF LAND USE NOTES

(1) AS DETERMINED BY THE TOWN BOARD RESOLUTION, DATED AUGUST 9, 2023.
(2) LOT AREA INCLUDES 0.24 ACRE WATER TANK LOT.
(3) APARTMENT PARKING REQUIREMENT: 2 SPACES PER DWELLING UNIT, PLUS ½ PER EACH BEDROOM IN EXCESS OF 2 BEDROOMES, PLUS 10% FOR VISITOR PARKING.
(4) AS REQUIRED BY §355-25
(5) TOWNHOME PARKING REQUIREMENT: 2 SPACES REQUIRED FOR EACH MARKET RATE TOWNHOME UNIT AND 1 SPACE FOR EACH UNIT PLUS ½ FOR EACH BEDROOM FOR AFFH UNIT.
(6) PARKING PROVIDED FOR EACH MARKET RATE RESIDENTIAL TOWNHOME UNIT INCLUDES 2 DRIVEWAY SPACES AND FOR EACH AFFH RESIDENTIAL TOWNHOME UNIT INCLUDES 2 SPACES AND ½ SPACE ALONG THE ROADWAYS (2 ½ SPACES PER UNIT TOTAL). 20 SPACES ARE PROVIDED NEAR THE PROPOSED CLUBHOUSE AND 16 ADDITIONAL SPACES ARE PROVIDED ALONG THE ROADWAYS (6 SPACES FOR AFFH UNITS AND 10 GUEST SPACES). IN ADDITION, 238 GARAGE SPACES ARE PROVIDED, WHICH ARE NOT INCLUDED IN THE PROVIDED PARKING COUNTS.

LEGEND

- EXISTING PROPERTY LINE
- ADJACENT PROPERTY LINE
- EXISTING EASEMENT LINE
- EXISTING WETLAND LINE AND DELINEATION
- EXISTING BUILDING OVERHANG
- EXISTING BUILDING LINE
- EXISTING PAVEMENT EDGE
- EXISTING CURB LINE
- EXISTING STONE WALL
- EXISTING RETAINING WALL
- EXISTING GUIDE RAIL
- EXISTING FENCE
- EXISTING SANITARY LINE AND SIZE
- EXISTING WATER LINE
- EXISTING GAS LINE
- EXISTING OVERHEAD WIRES
- EXISTING MANHOLE
- EXISTING FIRE HYDRANT
- EXISTING GAS VALVE
- EXISTING WATER VALVE
- EXISTING UTILITY POLE
- EXISTING LIGHT POLE
- EXISTING SIGN
- PROPOSED SUBDIVISION LINE
- PROPOSED EASEMENT
- PROPOSED BUILDING
- PROPOSED CONCRETE CURB
- PROPOSED CONCRETE SIDEWALK
- PROPOSED SANITARY SEWER MANHOLE
- PROPOSED HYDRANT
- PROPOSED SANITARY SEWER LINE & SIZE
- PROPOSED WATER LINE
- PROPOSED WATER VALVE
- PROPOSED RETAINING WALL (DESIGN BY OTHERS)

NOTES:

1. EXISTING CONDITIONS DEPICTED ON THIS PLAN HAVE BEEN TAKEN FROM SURVEY TITLED, "PARCEL COMPILATION SURVEY DEPICTING LAND OF MBIA INSURANCE CORP.," PREPARED BY JOHN MEYER CONSULTING, DATED 09/30/2005 AND SUPPLEMENTED WITH SURVEY TITLED, "TOPOGRAPHIC SURVEY," PREPARED BY JMC PLANNING, ENGINEERING, LANDSCAPE ARCHITECTURE & LAND SURVEYING, PLLC, DATED 02/10/2022.
2. GEOTECHNICAL BORING/TEST PIT LOCATIONS DEPICTED ON THIS PLAN WERE TAKEN FROM THE GEOTECHNICAL REPORT ENTITLED, "LETTER REPORT ON SUBSURFACE SOIL AND GROUNDWATER INVESTIGATION", DATED 12/20/2021, PREPARED BY CARLIN SIMPSON & ASSOCIATES, LLC.
3. THE WETLANDS DEPICTED ON THIS PLAN WERE DELINEATED BY ECOLOGICAL SOLUTIONS, LLC ON 07/10/2018 AND CONFIRMED BY THE TOWN WETLAND CONSULTANT ON 10/01/2020.
4. THE TOWN OF NORTH CASTLE SHALL BE GRANTED ACCESS TO THE HOA PORTIONS OF THE PROPERTY (LOT 126) AND MULTI-FAMILY PROPERTY (LOT 127) FOR THE PURPOSE OF INSPECTING, MAINTAINING AND REPAIRING THE PROPOSED TOWN OPERATED SANITARY SEWER AND WATER UTILITIES. SIMILAR ACCESS SHALL BE GRANTED FOR THE PURPOSE OF INSPECTING, MAINTAINING AND REPAIRING THE STORM WATER INFRASTRUCTURE IN THE EVENT THAT THE HOA DOES NOT ADEQUATELY MAINTAIN THE SYSTEMS.

LOT AREA TABLE

NUMBER	NAME	AREA (SF)	AREA (ACRE)	WIDTH X DEPTH (FT.)
1	LOT 1	5482	0.13	42 X 130
2	LOT 2	6240	0.14	48 X 130
3	LOT 3	6088	0.14	47 X 130
4	LOT 4	5633	0.13	43 X 130
5	LOT 5	6266	0.14	43 X 153
6	LOT 6	4692	0.11	35 X 139
7	LOT 7	4565	0.10	34 X 135
8	LOT 8	7471	0.17	56 X 132
9	LOT 9	6186	0.14	49 X 128
10	LOT 10	4284	0.10	34 X 126
11	LOT 11	6195	0.14	49 X 126
12	LOT 12	5796	0.13	46 X 126
13	LOT 13	4284	0.10	34 X 126
14	LOT 14	4284	0.10	34 X 126
15	LOT 15	5439	0.12	43 X 126
16	LOT 16	4928	0.11	44 X 117
17	LOT 17	4479	0.10	34 X 130
18	LOT 18	4522	0.10	34 X 133
19	LOT 19	6406	0.15	48 X 133
20	LOT 20	6251	0.14	47 X 133
21	LOT 21	4522	0.10	34 X 133
22	LOT 22	6406	0.15	48 x 133
23	LOT 23	6251	0.14	47 X 133
24	LOT 24	4522	0.10	34 X 133
25	LOT 25	6406	0.15	48 X 133
26	LOT 26	6251	0.14	47 X 133
27	LOT 27	4522	0.10	34 X 133
28	LOT 28	6224	0.14	47 X 133
29	LOT 29	6227	0.14	53 X 123
30	LOT 30	4715	0.11	35 X 138
31	LOT 31	4956	0.11	34 X 145
32	LOT 32	6781	0.16	49 X 142
33	LOT 33	6286	0.14	47 X 134
34	LOT 34	4356	0.10	34 X 129
35	LOT 35	7340	0.17	50 X 127
36	LOT 36	7371	0.17	60 X 125
37	LOT 37	3278	0.08	25 X 132
38	LOT 38	3286	0.08	25 X 132
39	LOT 39	6146	0.14	43 X 133
40	LOT 40	11677	0.27	58 X 145
41	LOT 41	4755	0.11	35 X 141
42	LOT 42	4597	0.11	34 X 136
43	LOT 43	6345	0.15	47 X 135
44	LOT 44	6345	0.15	46 X 135
45	LOT 45	4590	0.11	34 X 135
46	LOT 46	4590	0.11	34 X 135
47	LOT 47	5827	0.13	43 X 135
48	LOT 48	5292	0.12	42 X 126
49	LOT 49	4284	0.10	34 X 126
50	LOT 50	4284	0.10	34 X 126
51	LOT 51	5514	0.13	44 X 127
52	LOT 52	5057	0.12	46 X 111
53	LOT 53	4266	0.10	34 X 125
54	LOT 54	6111	0.14	48 X 126
55	LOT 55	5921	0.14	45 X 132
56	LOT 56	4569	0.10	34 X 135
57	LOT 57	4624	0.11	32 X 136
58	LOT 58	6836	0.16	53 X 129

LOT AREA TABLE

NUMBER	NAME	AREA (SF)	AREA (ACRE)	WIDTH X DEPTH (FT.)
59	LOT 59	7148	0.16	58 X 124
60	LOT 60	6049	0.14	48 X 126
61	LOT 61	5922	0.14	47 X 126
62	LOT 62	6082	0.14	48 X 126
63	LOT 63	6204	0.14	49 X 126
64	LOT 64	3150	0.07	25 X 126
65	LOT 65	3150	0.07	25 X 126
66	LOT 66	5864	0.13	47 X 126
67	LOT 67	6106	0.14	48 X 126
68	LOT 68	5542	0.13	44 X 126
69	LOT 69	6449	0.15	51 X 126
70	LOT 70	5542	0.13	44 X 126
71	LOT 71	6470	0.15	51 X 126
72	LOT 72	3150	0.07	25 X 126
73	LOT 73	3150	0.07	25 X 126
74	LOT 74	5190	0.12	41 X 126
75	LOT 75	7126	0.16	57 X 126
76	LOT 76	4284	0.10	34 X 126
77	LOT 77	5995	0.14	48 X 126
78	LOT 78	6875	0.16	55 X 126
79	LOT 79	4284	0.10	34 X 126
80	LOT 80	5785	0.13	46 X 126
81	LOT 81	6206	0.14	49 X 126
82	LOT 82	4284	0.10	34 X 126
83	LOT 83	6862	0.16	55 X 126
84	LOT 84	6312	0.14	50 X 126
85	LOT 85	4284	0.10	34 X 126
86	LOT 86	6290	0.14	50 X 126
87	LOT 87	7203	0.17	55 X 133
88	LOT 88	4839	0.11	34 X 142
89	LOT 89	7856	0.18	51 X 154
90	LOT 90	10539	0.24	56 X 162
91	LOT 91	6776	0.16	34 X 200
92	LOT 92	11729	0.27	59 X 204
93	LOT 93	12999	0.30	71 X 194
94	LOT 94	5987	0.14	34 X 177
95	LOT 95	5897	0.14	34 X 174
96	LOT 96	8404	0.19	48 X 176
97	LOT 97	8426	0.19	48 X 178
98	LOT 98	6098	0.14	34 X 180
99	LOT 99	7935	0.18	44 X 182
100	LOT 100	8811	0.20	48 X 184
101	LOT 101	6234	0.14	34 X 182
102	LOT 102	5983	0.14	33 X 147
103	LOT 103	5567	0.13	44 X 128
104	LOT 104	6899	0.16	50 X 138
105	LOT 105	7342	0.17	51 X 144
106	LOT 106	7581	0.17	56 X 136
107	LOT 107	7545	0.17	60 X 132
108	LOT 108	7672	0.18	54 X 142
109	LOT 109	6148	0.14	43 X 144
110	LOT 110	3595	0.08	25 X 144
111	LOT 111	6755	0.16	47 X 144
112	LOT 112	6899	0.16	48 X 144
113	LOT 113	3593	0.08	25 X 144
114	LOT 114	6180	0.14	43 X 144
115	LOT 115	7565	0.17	61 X 126
116	LOT 116	4291	0.10	34 X 126

LOT AREA TABLE

NUMBER	NAME	AREA (SF)	AREA (ACRE)	WIDTH X DEPTH (FT.)
117	LOT 117	6146	0.14	49 X 126
118	LOT 118	9177	0.21	73 X 140
119	LOT 119	9336	0.21	66 X 142
120	LOT 120	7024	0.16	49 X 144
121	LOT 121	3593	0.08	25 X 144
122	LOT 122	6755	0.16	27 X 144
123	LOT 123	6903	0.16	48 X 144
124	LOT 124	3593	0.08	25 X 144
125	LOT 125	6765	0.16	47 X 144
126	HOA LOT	746698	17.14	
127	MULTI-FAMILY	185128	4.25	
128	WATER-TANK	10459	0.24	

APPROVED BY TOWN OF NORTH CASTLE PLANNING BOARD RESOLUTION, DATED _____

_____ DATE: _____
CHRISTOPHER CARTHY, CHAIRMAN,
TOWN OF NORTH CASTLE PLANNING BOARD

ENGINEERING PLANS REVIEWED FOR CONFORMANCE TO RESOLUTION

_____ DATE: _____
JOSEPH M. CERMELE, PE
KSCJ CONSULTING
CONSULTING TOWN ENGINEERS

GRAPHIC SCALE
(IN FEET)
1 inch = 60 ft.

No.	Revision	Date	By
1.	PLANNING BOARD RESUBMISSION	11/10/2023	BMS
2.	PLANNING BOARD RESUBMISSION	12/21/2023	BMS

Previous Editions Obsolete

APPLICANT/OWNER:
AIRPORT CAMPUS I-V LLC
45 MESCHTER AVENUE
POUND RIDGE, NY 10576

JMC Planning, Engineering, Landscape Architecture & Land Surveying, PLLC
JMC Site Development Consultants, LLC
John Meyer Consulting, Inc.
120 BEDFORD ROAD • ARMONK, NY 10504
voice 914.273.5225 • fax 914.273.2102
www.jmcpllc.com

PRELIMINARY SUBDIVISION PLAT
AIRPORT CAMPUS
113 KING STREET (NY ROUTE 120)
NORTH CASTLE, NY 10504

ANY ALTERATION OF PLANS, SPECIFICATIONS, PLATS AND REPORTS BEARING THE SEAL OF A LICENSED PROFESSIONAL ENGINEER OR LICENSED LAND SURVEYOR IS A VIOLATION OF ARTICLE 145 OF THE NEW YORK STATE EDUCATION LAW, EXCEPT AS PROVIDED FOR BY SECTION 7209, SUBSECTION 2.

STATE OF NEW YORK · JOHN P. LOMBARDI · 071001 · LICENSED PROFESSIONAL ENGINEER

Drawn: BMS	Approved: AG
Scale: 1" = 60'	
Date: 11/10/2023	
Project No: 15072	
15072-SUBDIVISION	SUBDIVISION	SUBDIVISION.LS
Drawing No: PSP-1	

NOT FOR CONSTRUCTION

COPYRIGHT © 2023 by JMC All Rights Reserved. No part of this document may be reproduced, stored in a retrieval system, or transmitted in any form or by means, electronic, mechanical, photocopying, recording or otherwise, without the prior written permission of JMC PLANNING, ENGINEERING, LANDSCAPE ARCHITECTURE & LAND SURVEYING, PLLC (JMC). Any unauthorized use is prohibited by law and will be prosecuted to the fullest extent of the law. JMC PLANNING, ENGINEERING, LANDSCAPE ARCHITECTURE & LAND SURVEYING, PLLC (JMC) does not warrant the accuracy of any electronic media provided to other parties.

113 KING STREET

ARMONK, NY

SHEET LIST

A.001 - COVER SHEET
A.002 - TABULATIONS
A.100 - SITE PLAN
A.101 - BASEMENT PLAN
A.102 - 1ST FLOOR PLAN
A.103 - 2ND FLOOR PLAN
A.104 - 3RD FLOOR PLAN
A.105 - PENTHOUSE PLAN
A.106 - GARAGE BUILDING - 1ST FLOOR
A.107 - GARAGE BUILDING - 2ND FLOOR
A.201 - NORTH & SOUTH ELEVATIONS
A.202 - EAST & WEST ELEVATIONS
A.203 - GARAGE ELEVATIONS
A.204 - PERSPECTIVE VIEW 01
A.205 - PERSPECTIVE VIEW 02
A.206 - PERSPECTIVE VIEW 03
A.207 - PERSPECTIVE VIEW 04
A.210 - MATERIAL BOARD

lessard DESIGN
8521 LEESBURG PIKE, SUITE 700, VIENNA, VA 22182
P:571.830.1800 | F: 571.830.1801 | LESSARDDESIGN.COM

COVER SHEET

SITE PLAN SUBMISSION

©2023 LESSARD DESIGN INC. EXPRESSLY RESERVES ITS COMMON-LAW COPYRIGHT AND OTHER PROPERTY RIGHTS IN THESE PLANS. THESE PLANS ARE NOT TO BE REPRODUCED, CHANGED OR COPIED IN ANY OTHER FORM OR MATTER WHATSOEVER, NOR ARE THEY TO BE ASSIGNED TO ANY THIRD PARTY, WITHOUT FIRST OBTAINING THE EXPRESS WRITTEN PERMISSION AND CONSENT OF LESSARD DESIGN INC.

Armonk

113 King Street, Armonk, New York 10504

RoeCo

NOV 20, 2023
ROE.001D

SCALE:

A.001

MULTIFAMILY/ OFFICE CONVERSION SUBDIVISION LOT TABLE (SQ FT)

LEVEL 1			LEVEL 2			LEVEL 3			PENHOUSE LEVEL		
TYPE	#	SF	TYPE	UNIT #	SF	TYPE	UNIT #	SF	TYPE	UNIT #	SF
C9	UNIT 101	1,517	C9	UNIT 201	1,517	C9	UNIT 301	1,517	C4	UNIT 401	1,414
C9	UNIT 102	1,517	C9	UNIT 202	1,517	C9	UNIT 302	1,517	C3	UNIT 402	1,312
C10	UNIT 103	1,560	C10	UNIT 203	1,560	C10	UNIT 303	1,560	C5	UNIT 403	1,427
C6	UNIT 104	1,497	C6	UNIT 204	1,497	C6	UNIT 304	1,497	C5	UNIT 404	1,427
C8	UNIT 105	1,506	C8	UNIT 205	1,506	C8	UNIT 305	1,506			
B4	UNIT 106	1,400	C11	UNIT 206	1,500	C11	UNIT 306	1,500			
B5	UNIT 107	1,541	B5	UNIT 207	1,541	B5	UNIT 307	1,541			
B5	UNIT 108	1,541	B5	UNIT 208	1,541	B5	UNIT 308	1,541			
B2	UNIT 109	1,164	B3	UNIT 209	1,362	B3	UNIT 309	1,362			
C1 (AFFH)	UNIT 110	1,234	B1	UNIT 210	1,099	B1	UNIT 310	1,099			
C9m3	UNIT 111	1,460	C1 (AFFH)	UNIT 211	1,234	C1 (AFFH)	UNIT 311	1,234			
			A1 (AFFH)	UNIT 212	1,126	C2	UNIT 312	1,391			
			C7	UNIT 213	1,318	C9m1	UNIT 313	1,852			
			C9m2	UNIT 214	1,748	C9m2	UNIT 314	1,748			

Avr. 1BR unit area (Market rate) = 1394 SF
Min. AFFH 1 BR unit (80% Market rate) = 1115 SF

Avr. 2BR unit area (Market rate) = 1514 SF
Min. AFFH 2 BR unit (80% Market rate) = 1211 SF

ARMONK - OFFICE CONVERSION - BUILDING TABULATIONS

UNIT TYPE					BASEMENT	R1	R2	R3	PENTHOUSE	TOTAL	MIX: Units Per Type	MIX: Average SF	MIX: %	Notes
1BR	A-1 (AFFH)	1BR, 1.5BA	1,126	Net Sq. Ft.			1			1	**1**	1,126	30.2%	(Min AFFH unit area = 80% AVR. Market rated = 1115 SF)
	B-1	1BR, 2 BA + DEN	1,099	Net Sq. Ft.			1	1		2	**12**	1,394		
	B-2	1BR, 2 BA + DEN	1,164	Net Sq. Ft.		1				1				
	B-3	1BR, 2 BA + DEN	1,362	Net Sq. Ft.			1	1		2				
	B-4	1BR, 2 BA + DEN	1,400	Net Sq. Ft.		1				1				
	B-5*	1BR, 2 BA + DEN	1,541	Net Sq. Ft.		2	2	2		6				
2BR	C-1 (AFFH)	2BR, 2 BA	1,234	Net Sq. Ft.		1	1	1		3	**3**	1,234	69.8%	(Min. AFFH unit area = 80% AVR. Market rated = 1211 SF)
	C-2	2BR, 2 BA	1,391	Net Sq. Ft.				1		1	**27**	1,514		
	C-3	2BR, 2 BA	1,312	Net Sq. Ft.					1	1				
	C-4	2BR, 2 BA	1,414	Net Sq. Ft.					1	1				
	C-5	2BR, 2 BA	1,427	Net Sq. Ft.					2	2				
	C-6	2BR, 2.5 BA	1,497	Net Sq. Ft.		1	1	1		3				
	C-7	2BR, 2.5 BA	1,318	Net Sq. Ft.			1			1				
	C-8	2BR, 2 BA + DEN	1,506	Net Sq. Ft.		1	1	1		3				
	C-9	2BR, 2 BA	1,517	Net Sq. Ft.		2	2	2		6				
	C-9m1*	2BR, 2.5 BA + DEN	1,852	Net Sq. Ft.				1		1				
	C-9m2	2BR, 2.5 BA + DEN	1,748	Net Sq. Ft.			1	1		2				
	C-9m3	2BR, 2 BA	1,460	Net Sq. Ft.		1				1				
	C-10	2BR, 2.5 BA + DEN	1,560	Net Sq. Ft.		1	1	1		3				
	C-11*	2BR, 2 BA	1,500	Net Sq. Ft.			1	1		2				
Units Per Floor					**0**	**11**	**14**	**14**	**4**	**43**		1,452	100.0%	

	BASEMENT	R1	R2	R3	PENTHOUSE	TOTAL	
Net Area Per Floor	0	15,937	20,066	20,865	5,580	**62,448**	
Circulation/Mech/ Storage	9,027	5,748	5,014	5,151	2,752	27,692	
Lobby / Leasing / Amenity	16,698	3,580				**20,278**	
Gross Area Per Floor	**25,725**	**25,265**	**25,080**	**26,016**	**8,332**	**110,418**	
Average Gross Area per unit						**2,568**	
Average Net Area per unit						**1,452**	
Building Efficiency		63.1%	80.0%	80.2%	67.0%	**73.7%**	(not including Basement)

NOTES : * **Unit NSF** does not includes Garage/storage within units

lessard DESIGN
8521 LEESBURG PIKE, SUITE 700, VIENNA, VA 22182
P:571.830.1800 | F: 571.830.1801 | LESSARDDESIGN.COM

TABULATIONS

SITE PLAN SUBMISSION

©2023 LESSARD DESIGN INC. EXPRESSLY RESERVES ITS COMMON-LAW COPYRIGHT AND OTHER PROPERTY RIGHTS IN THESE PLANS. THESE PLANS ARE NOT TO BE REPRODUCED, CHANGED OR COPIED IN ANY OTHER FORM OR MATTER WHATSOEVER, NOR ARE THEY TO BE ASSIGNED TO ANY THIRD PARTY, WITHOUT FIRST OBTAINING THE EXPRESS WRITTEN PERMISSION AND CONSENT OF LESSARD DESIGN INC.

Armonk
113 King Street, Armonk, New York 10504
RoeCo

DEC. 20, 2023
ROE.001D

SCALE:

A.002

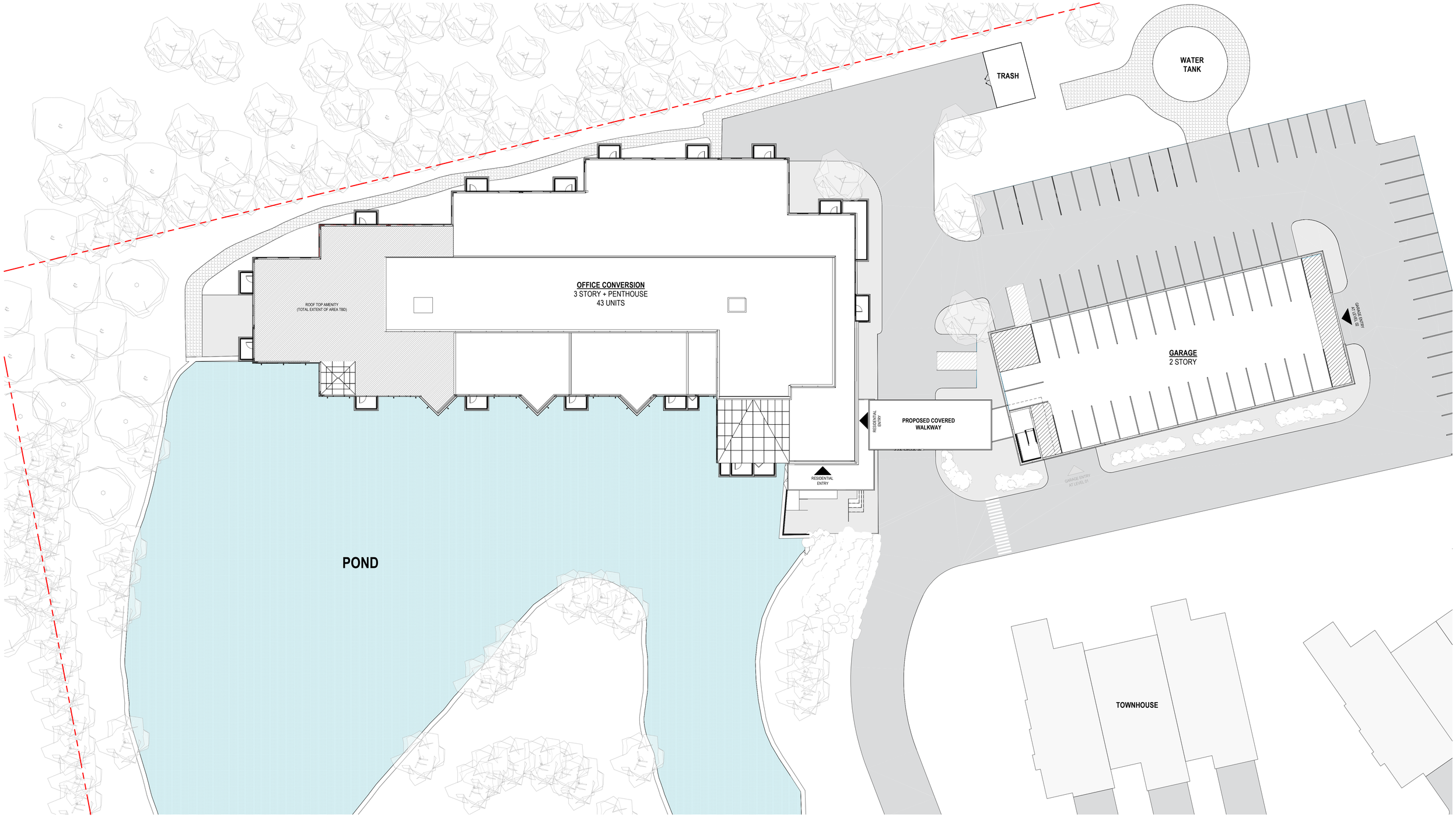

lessard DESIGN
8521 LEESBURG PIKE, SUITE 700, VIENNA, VA 22182
P:571.830.1800 | F: 571.830.1801 | LESSARDDESIGN.COM

SITE PLAN

SITE PLAN SUBMISSION

©2023 LESSARD DESIGN INC. EXPRESSLY RESERVES ITS COMMON-LAW COPYRIGHT AND OTHER PROPERTY RIGHTS IN THESE PLANS. THESE PLANS ARE NOT TO BE REPRODUCED, CHANGED OR COPIED IN ANY OTHER FORM OR MATTER WHATSOEVER, NOR ARE THEY TO BE ASSIGNED TO ANY THIRD PARTY, WITHOUT FIRST OBTAINING THE EXPRESS WRITTEN PERMISSION AND CONSENT OF LESSARD DESIGN INC.

Armonk

113 King Street, Armonk, New York 10504

RoeCo

NOV 20, 2023
ROE.001D

SCALE: 1" = 20'-0"

A.100

N

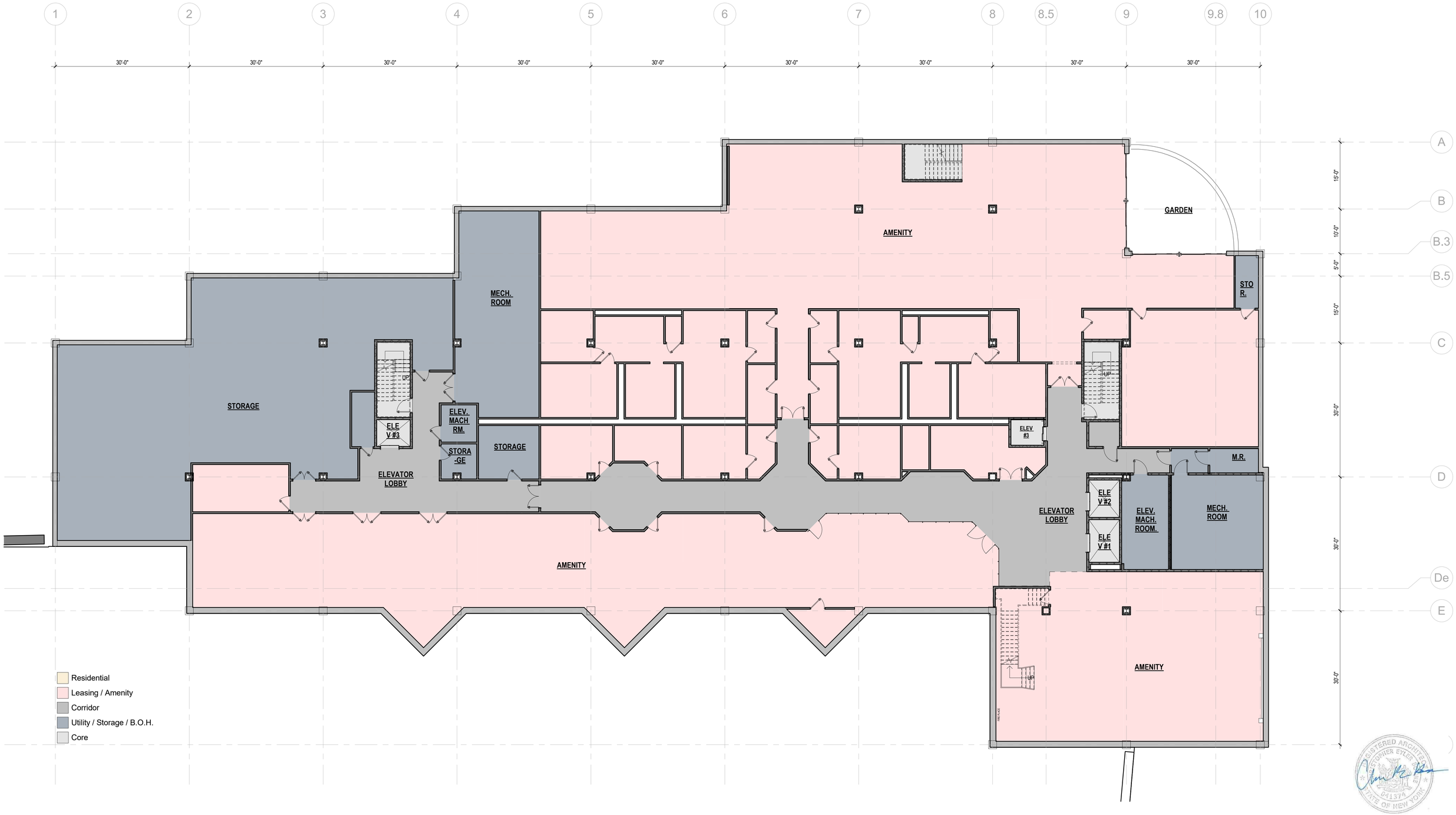

lessard DESIGN

8521 LEESBURG PIKE, SUITE 700, VIENNA, VA 22182
P:571.830.1800 | F: 571.830.1801 | LESSARDDESIGN.COM

BASEMENT FLOOR PLAN

SITE PLAN SUBMISSION

©2023 LESSARD DESIGN INC. EXPRESSLY RESERVES ITS COMMON-LAW COPYRIGHT AND OTHER PROPERTY RIGHTS IN THESE PLANS. THESE PLANS ARE NOT TO BE REPRODUCED, CHANGED OR COPIED IN ANY OTHER FORM OR MATTER WHATSOEVER, NOR ARE THEY TO BE ASSIGNED TO ANY THIRD PARTY, WITHOUT FIRST OBTAINING THE EXPRESS WRITTEN PERMISSION AND CONSENT OF LESSARD DESIGN INC.

Armonk

113 King Street, Armonk, New York 10504

RoeCo

NOV 20, 2023
ROE.001D

SCALE: 1" = 10'-0"

A.101

lessard DESIGN

8521 LEESBURG PIKE, SUITE 700, VIENNA, VA 22182
P:571.830.1800 | F: 571.830.1801 | LESSARDDESIGN.COM

1ST FLOOR PLAN

SITE PLAN SUBMISSION

©2023 LESSARD DESIGN INC. EXPRESSLY RESERVES ITS COMMON-LAW COPYRIGHT AND OTHER PROPERTY RIGHTS IN THESE PLANS. THESE PLANS ARE NOT TO BE REPRODUCED, CHANGED OR COPIED IN ANY OTHER FORM OR MATTER WHATSOEVER, NOR ARE THEY TO BE ASSIGNED TO ANY THIRD PARTY, WITHOUT FIRST OBTAINING THE EXPRESS WRITTEN PERMISSION AND CONSENT OF LESSARD DESIGN INC.

Armonk

113 King Street, Armonk, New York 10504

RoeCo

DEC. 20, 2023
ROE.001D

SCALE: 1" = 10'-0"

N

A-102

lessard DESIGN
8521 LEESBURG PIKE, SUITE 700, VIENNA, VA 22182
P:571.830.1800 | F: 571.830.1801 | LESSARDDESIGN.COM

2ND FLOOR PLAN

SITE PLAN SUBMISSION

©2023 LESSARD DESIGN INC. EXPRESSLY RESERVES ITS COMMON-LAW COPYRIGHT AND OTHER PROPERTY RIGHTS IN THESE PLANS. THESE PLANS ARE NOT TO BE REPRODUCED, CHANGED OR COPIED IN ANY OTHER FORM OR MATTER WHATSOEVER, NOR ARE THEY TO BE ASSIGNED TO ANY THIRD PARTY, WITHOUT FIRST OBTAINING THE EXPRESS WRITTEN PERMISSION AND CONSENT OF LESSARD DESIGN INC.

Armonk

113 King Street, Armonk, New York 10504

RoeCo

DEC. 20, 2023
ROE.001D

SCALE: 1" = 10'-0"

A-103

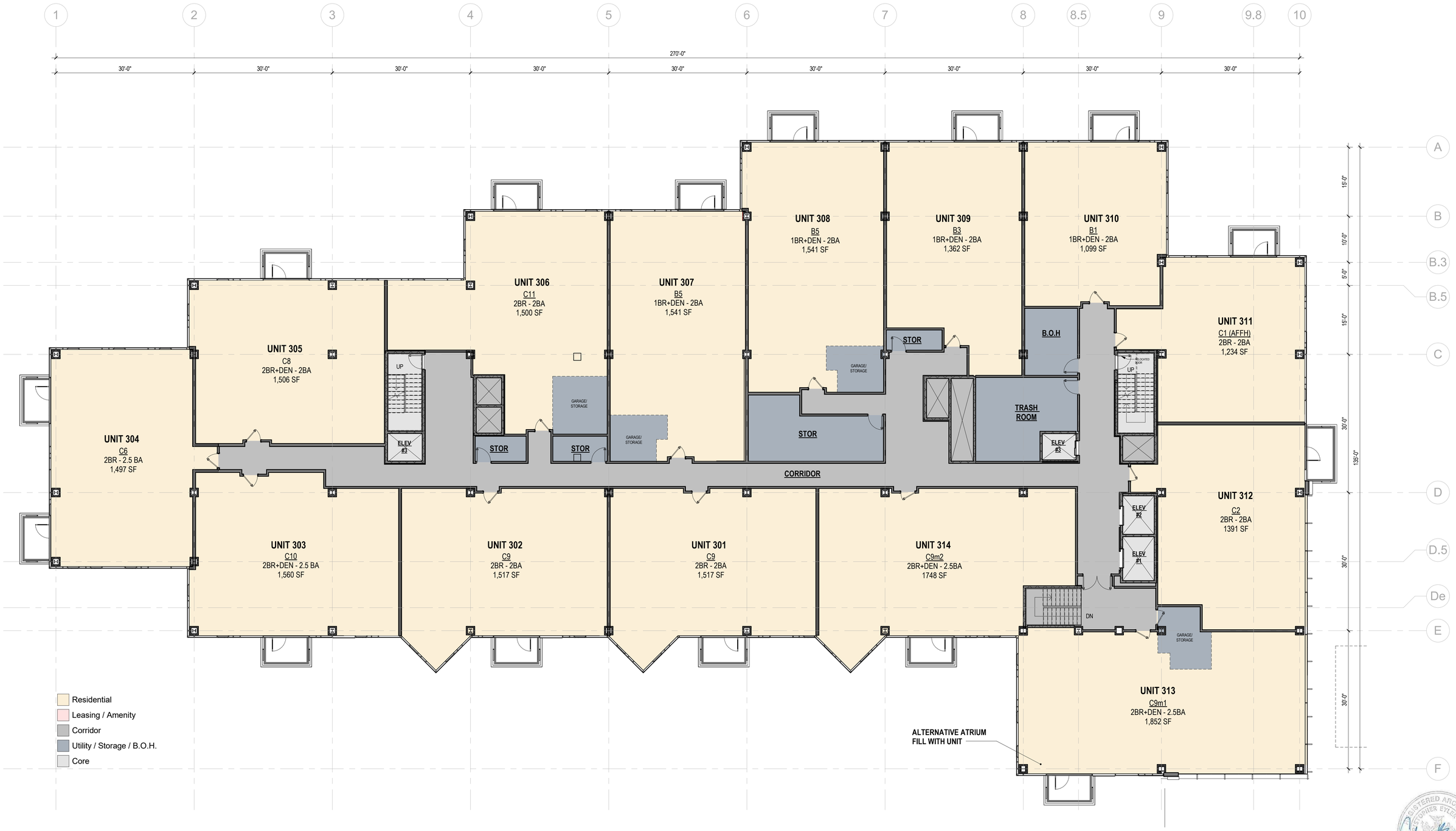

lessard DESIGN
8521 LEESBURG PIKE, SUITE 700, VIENNA, VA 22182
P:571.830.1800 | F: 571.830.1801 | LESSARDDESIGN.COM

3RD FLOOR PLAN

SITE PLAN SUBMISSION

©2023 LESSARD DESIGN INC. EXPRESSLY RESERVES ITS COMMON-LAW COPYRIGHT AND OTHER PROPERTY RIGHTS IN THESE PLANS. THESE PLANS ARE NOT TO BE REPRODUCED, CHANGED OR COPIED IN ANY OTHER FORM OR MATTER WHATSOEVER, NOR ARE THEY TO BE ASSIGNED TO ANY THIRD PARTY, WITHOUT FIRST OBTAINING THE EXPRESS WRITTEN PERMISSION AND CONSENT OF LESSARD DESIGN INC.

Armonk

113 King Street, Armonk, New York 10504

RoeCo

DEC. 20, 2023
ROE.001D

A-104

SCALE: 1" = 10'-0"

N

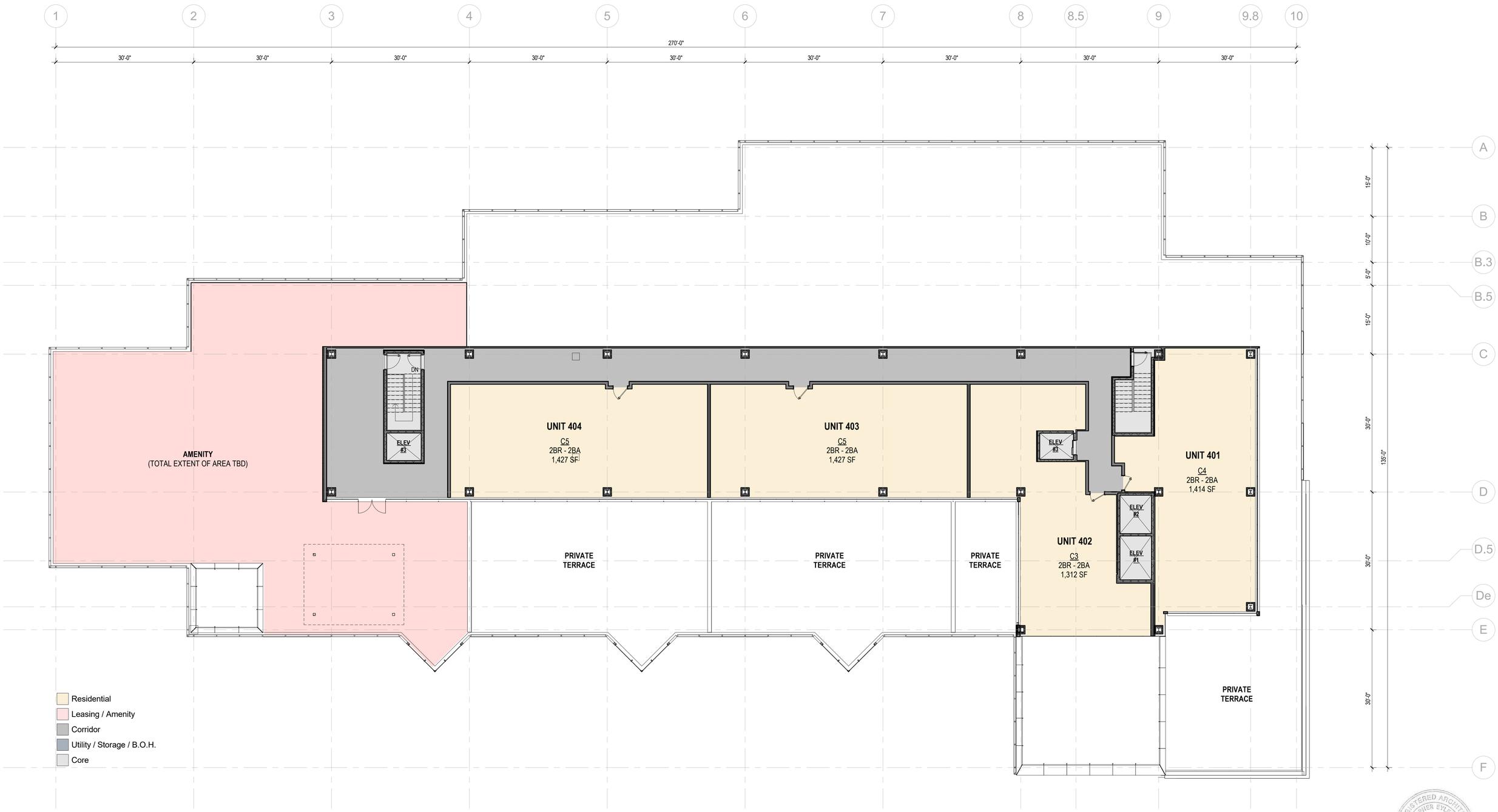

lessard DESIGN
8521 LEESBURG PIKE, SUITE 700, VIENNA, VA 22182
P:571.830.1800 | F: 571.830.1801 | LESSARDDESIGN.COM

PENTHOUSE PLAN

SITE PLAN SUBMISSION

©2023 LESSARD DESIGN INC. EXPRESSLY RESERVES ITS COMMON-LAW COPYRIGHT AND OTHER PROPERTY RIGHTS IN THESE PLANS. THESE PLANS ARE NOT TO BE REPRODUCED, CHANGED OR COPIED IN ANY OTHER FORM OR MATTER WHATSOEVER, NOR ARE THEY TO BE ASSIGNED TO ANY THIRD PARTY, WITHOUT FIRST OBTAINING THE EXPRESS WRITTEN PERMISSION AND CONSENT OF LESSARD DESIGN INC.

Armonk

113 King Street, Armonk, New York 10504

RoeCo

NOV. 20, 2023
ROE.001D

SCALE: 1" = 10'-0"

A-105

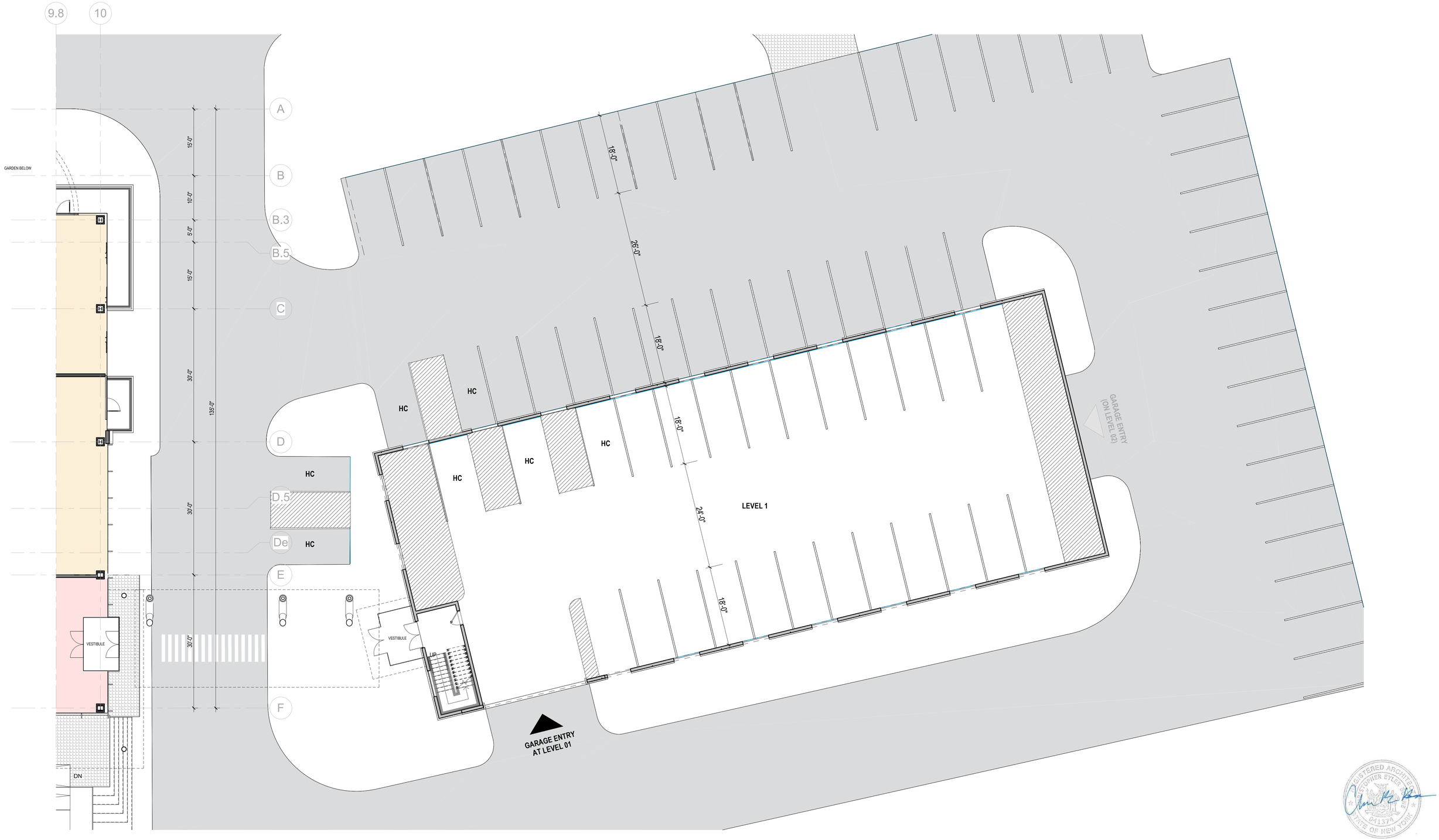

lessard DESIGN

8521 LEESBURG PIKE, SUITE 700, VIENNA, VA 22182
P:571.830.1800 | F: 571.830.1801 | LESSARDDESIGN.COM

GARAGE BUILDING - 1ST FLOOR

SITE PLAN SUBMISSION

©2023 LESSARD DESIGN INC. EXPRESSLY RESERVES ITS COMMON-LAW COPYRIGHT AND OTHER PROPERTY RIGHTS IN THESE PLANS. THESE PLANS ARE NOT TO BE REPRODUCED, CHANGED OR COPIED IN ANY OTHER FORM OR MATTER WHATSOEVER, NOR ARE THEY TO BE ASSIGNED TO ANY THIRD PARTY, WITHOUT FIRST OBTAINING THE EXPRESS WRITTEN PERMISSION AND CONSENT OF LESSARD DESIGN INC.

Armonk

113 King Street, Armonk, New York 10504

RoeCo

NOV 20, 2023
ROE.001D

SCALE: 1" = 10'-0"

A.106

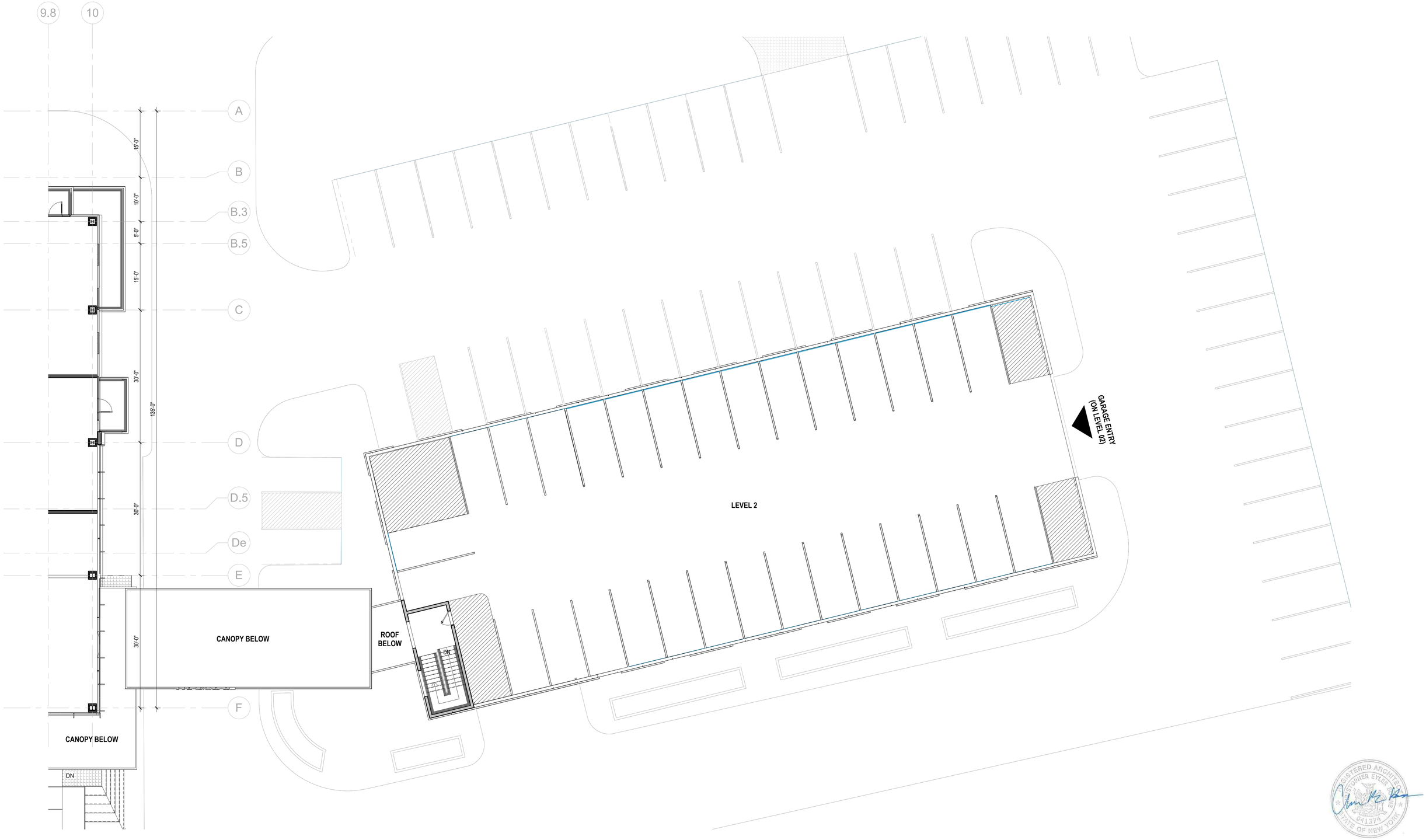

lessard DESIGN

8521 LEESBURG PIKE, SUITE 700, VIENNA, VA 22182
P:571.830.1800 | F: 571.830.1801 | LESSARDDESIGN.COM

GARAGE BUILDING - 2ND FLOOR

SITE PLAN SUBMISSION

©2023 LESSARD DESIGN INC. EXPRESSLY RESERVES ITS COMMON-LAW COPYRIGHT AND OTHER PROPERTY RIGHTS IN THESE PLANS. THESE PLANS ARE NOT TO BE REPRODUCED, CHANGED OR COPIED IN ANY OTHER FORM OR MATTER WHATSOEVER, NOR ARE THEY TO BE ASSIGNED TO ANY THIRD PARTY, WITHOUT FIRST OBTAINING THE EXPRESS WRITTEN PERMISSION AND CONSENT OF LESSARD DESIGN INC.

Armonk

113 King Street, Armonk, New York 10504

RoeCo

NOV 20, 2023
ROE.001D

SCALE: 1" = 10'-0"

A.107

NORTH ELEVATION

SOUTH ELEVATION

MATERIAL LEGEND

01 - METAL PANEL
02 - WOOD PANEL
03 - PRECAST CONCRETE
04 - EXISTING GLASS
05 - NEW GLASS

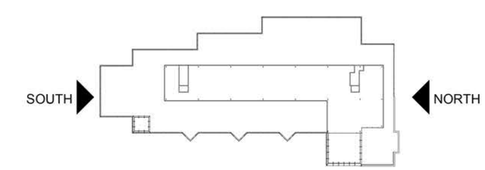

lessard DESIGN
8521 LEESBURG PIKE, SUITE 700, VIENNA, VA 22182
P:571.830.1800 | F: 571.830.1801 | LESSARDDESIGN.COM

NORTH AND SOUTH ELEVATION

SITE PLAN SUBMISSION

©2023 LESSARD DESIGN INC. EXPRESSLY RESERVES ITS COMMON-LAW COPYRIGHT AND OTHER PROPERTY RIGHTS IN THESE PLANS. THESE PLANS ARE NOT TO BE REPRODUCED, CHANGED OR COPIED IN ANY OTHER FORM OR MATTER WHATSOEVER, NOR ARE THEY TO BE ASSIGNED TO ANY THIRD PARTY, WITHOUT FIRST OBTAINING THE EXPRESS WRITTEN PERMISSION AND CONSENT OF LESSARD DESIGN INC.

Armonk
113 King Street, Armonk, New York 10504
RoeCo

NOV. 20, 2023
ROE.001D

SCALE: 1/16" = 1'-0"

A-201

EAST ELEVATION

MATERIAL LEGEND

01 - METAL PANEL
02 - WOOD PANEL
03 - PRECAST CONCRETE
04 - EXISTING GLASS
05 - NEW GLASS

WEST ELEVATION

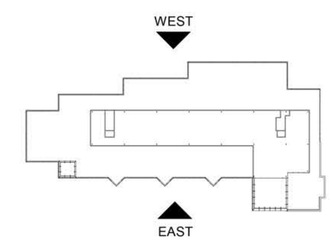

lessard DESIGN
8521 LEESBURG PIKE, SUITE 700, VIENNA, VA 22182
P:571.830.1800 | F: 571.830.1801 | LESSARDDESIGN.COM

EAST AND WEST ELEVATION

SITE PLAN SUBMISSION

©2023 LESSARD DESIGN INC. EXPRESSLY RESERVES ITS COMMON-LAW COPYRIGHT AND OTHER PROPERTY RIGHTS IN THESE PLANS. THESE PLANS ARE NOT TO BE REPRODUCED, CHANGED OR COPIED IN ANY OTHER FORM OR MATTER WHATSOEVER, NOR ARE THEY TO BE ASSIGNED TO ANY THIRD PARTY, WITHOUT FIRST OBTAINING THE EXPRESS WRITTEN PERMISSION AND CONSENT OF LESSARD DESIGN INC.

Armonk
113 King Street, Armonk, New York 10504
RoeCo

NOV. 20, 2023
ROE.001D
SCALE: 1/16" = 1'-0"

A-202

GARAGE - SOUTH ELEVATION

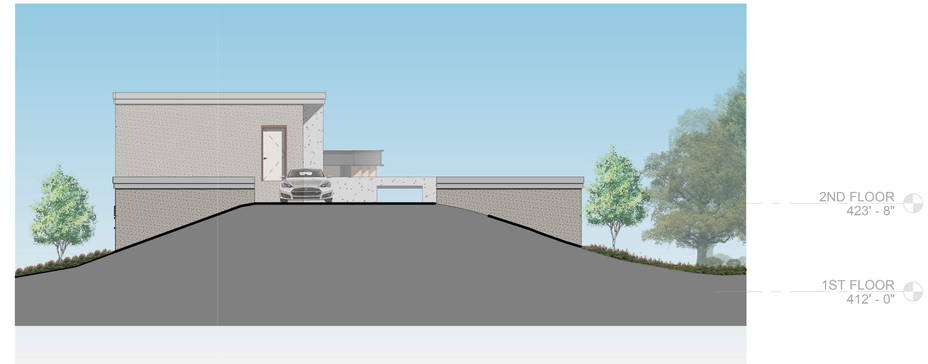

GARAGE - NORTH ELEVATION

GARAGE - EAST ELEVATION

GARAGE - WEST ELEVATION

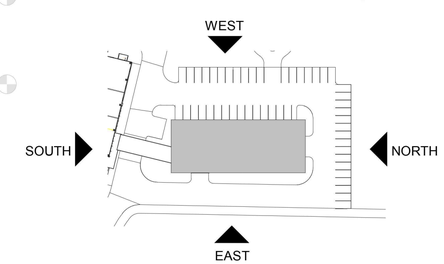

lessard DESIGN
8521 LEESBURG PIKE, SUITE 700, VIENNA, VA 22182
P:571.830.1800 | F: 571.830.1801 | LESSARDDESIGN.COM

GARAGE ELEVATIONS

SITE PLAN SUBMISSION

©2023 LESSARD DESIGN INC. EXPRESSLY RESERVES ITS COMMON-LAW COPYRIGHT AND OTHER PROPERTY RIGHTS IN THESE PLANS. THESE PLANS ARE NOT TO BE REPRODUCED, CHANGED OR COPIED IN ANY OTHER FORM OR MATTER WHATSOEVER, NOR ARE THEY TO BE ASSIGNED TO ANY THIRD PARTY, WITHOUT FIRST OBTAINING THE EXPRESS WRITTEN PERMISSION AND CONSENT OF LESSARD DESIGN INC.

Armonk

113 King Street, Armonk, New York 10504

RoeCo

NOV 20, 2023
ROE.001D

SCALE: 1" = 10'-0"

A.203

lessard DESIGN
8521 LEESBURG PIKE, SUITE 700, VIENNA, VA 22182
P:571.830.1800 | F: 571.830.1801 | LESSARDDESIGN.COM

3D PERSPECTIVE VIEW 01

SITE PLAN SUBMISSION

©2023 LESSARD DESIGN INC. EXPRESSLY RESERVES ITS COMMON-LAW COPYRIGHT AND OTHER PROPERTY RIGHTS IN THESE PLANS. THESE PLANS ARE NOT TO BE REPRODUCED, CHANGED OR COPIED IN ANY OTHER FORM OR MATTER WHATSOEVER, NOR ARE THEY TO BE ASSIGNED TO ANY THIRD PARTY, WITHOUT FIRST OBTAINING THE EXPRESS WRITTEN PERMISSION AND CONSENT OF LESSARD DESIGN INC.

Armonk

113 King Street, Armonk, New York 10504

RoeCo

NOV 20, 2023
ROE.001D

SCALE:

A.204

lessard DESIGN
8521 LEESBURG PIKE, SUITE 700, VIENNA, VA 22182
P:571.830.1800 | F: 571.830.1801 | LESSARDDESIGN.COM

3D PERSPECTIVE VIEW 02

SITE PLAN SUBMISSION

©2023 LESSARD DESIGN INC. EXPRESSLY RESERVES ITS COMMON-LAW COPYRIGHT AND OTHER PROPERTY RIGHTS IN THESE PLANS. THESE PLANS ARE NOT TO BE REPRODUCED, CHANGED OR COPIED IN ANY OTHER FORM OR MATTER WHATSOEVER, NOR ARE THEY TO BE ASSIGNED TO ANY THIRD PARTY, WITHOUT FIRST OBTAINING THE EXPRESS WRITTEN PERMISSION AND CONSENT OF LESSARD DESIGN INC.

Armonk

113 King Street, Armonk, New York 10504

RoeCo

NOV 20, 2023
ROE.001D

SCALE:

A.205

lessard DESIGN
8521 LEESBURG PIKE, SUITE 700, VIENNA, VA 22182
P:571.830.1800 | F: 571.830.1801 | LESSARDDESIGN.COM

3D PERSPECTIVE VIEW 03

SITE PLAN SUBMISSION

©2023 LESSARD DESIGN INC. EXPRESSLY RESERVES ITS COMMON-LAW COPYRIGHT AND OTHER PROPERTY RIGHTS IN THESE PLANS. THESE PLANS ARE NOT TO BE REPRODUCED, CHANGED OR COPIED IN ANY OTHER FORM OR MATTER WHATSOEVER, NOR ARE THEY TO BE ASSIGNED TO ANY THIRD PARTY, WITHOUT FIRST OBTAINING THE EXPRESS WRITTEN PERMISSION AND CONSENT OF LESSARD DESIGN INC.

Armonk

113 King Street, Armonk, New York 10504

RoeCo

NOV 20, 2023
ROE.001D

SCALE: 12" = 1'-0"

A.206

lessard DESIGN
8521 LEESBURG PIKE, SUITE 700, VIENNA, VA 22182
P:571.830.1800 | F: 571.830.1801 | LESSARDDESIGN.COM

3D PERSPECTIVE VIEW 04

SITE PLAN SUBMISSION

©2023 LESSARD DESIGN INC. EXPRESSLY RESERVES ITS COMMON-LAW COPYRIGHT AND OTHER PROPERTY RIGHTS IN THESE PLANS. THESE PLANS ARE NOT TO BE REPRODUCED, CHANGED OR COPIED IN ANY OTHER FORM OR MATTER WHATSOEVER, NOR ARE THEY TO BE ASSIGNED TO ANY THIRD PARTY, WITHOUT FIRST OBTAINING THE EXPRESS WRITTEN PERMISSION AND CONSENT OF LESSARD DESIGN INC.

Armonk

113 King Street, Armonk, New York 10504

RoeCo

NOV 20, 2023
ROE.001D

SCALE:

A.207

METAL PANEL
Slate Grey
Longboard or similar

WOOD PANEL
Dark Knotty Pine
Long Board or similar

PRECAST CONCRETE

lessard DESIGN
8521 LEESBURG PIKE, SUITE 700, VIENNA, VA 22182
P:571.830.1800 | F: 571.830.1801 | LESSARDDESIGN.COM

MATERIAL BOARD

SITE PLAN SUBMISSION

©2023 LESSARD DESIGN INC. EXPRESSLY RESERVES ITS COMMON-LAW COPYRIGHT AND OTHER PROPERTY RIGHTS IN THESE PLANS. THESE PLANS ARE NOT TO BE REPRODUCED, CHANGED OR COPIED IN ANY OTHER FORM OR MATTER WHATSOEVER, NOR ARE THEY TO BE ASSIGNED TO ANY THIRD PARTY, WITHOUT FIRST OBTAINING THE EXPRESS WRITTEN PERMISSION AND CONSENT OF LESSARD DESIGN INC.

Armonk
113 King Street, Armonk, New York 10504
RoeCo

NOV. 20, 2023
ROE.001D

SCALE:

A.210

TOWN OF
NORTH CASTLE
CONSERVATION
BOARD

17 BEDFORD ROAD
ARMONK, NY 10504
TEL: 914 273 0346
FAX: 914 273 3554
www.northcastleny.com

DATE: December 7, 2023

MEMO TO: Christopher Carthy, Chairman
& Planning Board Members

FROM: Jane Black, Co-Chair
John Krupa, Co-Chairman
Conservation Board

RE: 113 King Street

The applicant is seeking Subdivision, Site Plan, Wetland Permit and Tree Removal Permit approval from the Planning Board for the proposed redevelopment of the former MBIA Headquarters. The +/- 3.8-acre project site contains +/=0.25-acre wetland in the corner of the property, and a 9.4-acre conservation easement is proposed. David Sessions, Town Wetland Consultant, stated impact to wetlands was limited and was in favor of the proposed mitigation plan, which included meadow mix and native buffer restoration plantings. At its November 21, 2023, meeting, the project was approved. A motion was made by Erin Nenadich and was seconded by Craig Benedict, with the following conditions: that the Mitigation Plan reflect the use of native plantings and that pesticide and herbicide use be prohibited.

JM/JB/JK

cc: A. Guccione, JMC
A. Kaufman, Town Planner
R. Baroni, Town Attorney
A. Simon, Town Clerk
J. Berra, Town Board Liaison
Conservation Board

BYRAM HILLS SCHOOL DISTRICT

Office of Transportation
9 MacDonald Avenue, Armonk, NY 10504
Office: 914-273-4245 Fax: 914-273-4247

Phil Peterson
Supervisor of Transportation

To: David Lombardi

November 14, 2023

Re: Airport Campus school bus stop

It is the intention of the Byram Hills CSD to provide a school bus for grades K through 12 for the Airport Campus housing development. Providing that the pickup and drop off site will be at the intersection of Cooney Hill Rd and what was once named Weber Pl as previously discussed. Furthermore, Cooney Hill Rd must remain deemed a public road by the Town of North Castle as a school bus will not and cannot enter onto a private roadway.

Please feel free to reach out to me should you have any questions or concerns.

Sincerely,

113 King Street – Airport Campus

Turf Management Plan

Prepared by:

Marco Goncalves

Turf Specialists & Certified Pesticide Applicator NYS DEC

NYSTL Member

December 18, 2023

Project Description:

Construction of 125 attached townhomes on the 34.3 acres and reuse of the existing southern office building apartments with a new parking structure on 4.5 acres.

Introduction:

This Turf Management Plan is to be used as a starting point for proper maintenance of turf at this proposed site, while taking into account:

- Turf Species selection
- Best Management Practices
- IPM Integration
- Wet Land Protection from Fertilizer and Pesticide applications

Residential and commercial Turf and utility-type turf comprise a significant portion of the landscape. Lawns and similar turf areas are key resources, as they contribute to open space, provide recreation, add value to properties, and help to protect the environment. Properly maintained turf provides many functional, recreational, and ornamental benefits, which are summarized below.

Table 1. Benefits of turf.

Functional		Recreational	Ornamental
▪ Dust and mud control ▪ Entrapment of pollutants ▪ Environmental protection ▪ Fire prevention ▪ Glare reduction ▪ Ground water recharge ▪ Slope stabilization	▪ Heat abatement ▪ Noise abatement ▪ Security-visibility ▪ Soil loss and erosion control ▪ Protection of underground utility services ▪ Greenhouse gas reduction ▪ Storm water abatement	▪ Safe playing surfaces ▪ Low cost surfaces ▪ Mental health ▪ Physical health ▪ Entertainment	▪ Beauty ▪ Increased property value ▪ Community pride ▪ Complements the landscape ▪ Mental health

Adapted from J. B. Beard and R. L. Green, 1994, from The Journal of Environmental Quality, *The Role of Turfgrasses in Environmental Protection and Their Benefits to Humans*.

Improperly or poorly maintained lawns are less functional in terms of aesthetics and recreation, may result in inefficient use of valuable natural resources such as water, and are more likely to be sources of environmental contamination.

Turf Grass Species Selection:

- Sunny & Part Sun Areas - Tall Turf Type Fescue / Kentucky Blue Grass Mix
- Shaded Areas - Fine Fescue / Bluegrass Mix

Best Management Practices:

Mowing

Frequency: The importance of regular mowing to promote healthy turf cannot be over-emphasized. Growth should be monitored and frequency increased to avoid removing more than 1/3 of the leaf blade at each mowing occurrence.

The following is the basic standard for mowing frequency for Cool Season Grasses:

- April – October: Weekly
- November: Bi-Weekly
- December – March: No Mowing

Cutting Height: Mowing height for Cool Season Grasses should be mowed between 3" to 3.5"

Mulch Mowing: Mulching Grass clippings in place should be used when conditions allow.

- Mowing patterns should be alternated weekly to avoid ruts and compaction from the wheels.
- Avoid driving on wet ground where ruts will remain.
- Mowing should be done with sharp blades to avoid tearing of grass.
- Ensure that grass clippings are removed from pavement as to not be washed into stream or drainage systems.

Trimming/Edging:

Trimming shall be performed by line trimmers in areas that cannot be accessed by mowers.

Edging shall be performed a minimum of 2 to 4 times per year.

Lawn Treatment/Applications:

No use of any fertilizers, insecticides, herbicides, fungicides, etc. within the site's identified wetland/watercourse or it's 100' buffers. In addition, no chemicals shall be applied within 100 feet of proposed stormwater management which retains and or detains stormwater.

Recommend to use organic based fertilizers with zero phosphorus. And all pesticides must be approved by NYS DEC and EPA.

5 Applications per season:

- Early Spring

    - Pre-emergent application with organic based Fertilizer
    - Spot spray for broadleaf weeds, as needed
    - (no blanket applications)
- Late Spring
    - Organic based Fertilizer Application
    - Spot spray for broadleaf weeds, as needed
    - (no blanket applications)
- Summer
    - Surface and Subsurface (grub) insect application with organic based Fertilizer
    - Spot spray for broadleaf weeds, as needed
    - (no blanket applications)
- Early Fall
    - Application with organic based Fertilizer
    - Spot spray for broadleaf weeds as needed
    - (no blanket applications)
    - Lawn Core Aeration
- Late Fall
    - Winterizing Fertilizer
    - Spot spray for broadleaf weeds as needed
    - (no blanket applications)

Irrigation:

When feasible the main water source should be the pond on site, using existing or new wells to replenish/maintain adequate pond level before considering using the domestic water source.

Site conditions such as soil type and slope, exposure and moisture requirements of grass dictate both frequency and duration of application.

Weather conditions, such as temperature and rainfall, require monitoring and response. Generally, turf grass requires at ***least*** 1 inch of water per week. Infrequent deep watering is preferable to avoid runoff, soil type will dictate watering schedule.

Visually test and monitor the system thought the season.

TABLE OF CONTENTS

SECTION	TITLE	PAGE
I.	INTRODUCTION	
II.	CONTRACTOR INFORMATION.....	
III.	IPM METHODOLOGY AND IMPLEMENTATION	
IV.	APPENDICES	
	A. Bartlett Research Laboratory Technical Report: IPM for Landscape Plants	
	B. Figure 1.A_IPM Management Zones	
	C. Figure 1.B_IPM Management Zones	
	D. Figure 2.A_IPM Tolerance Thresholds	
	E. Figure 2.B_IPM Tolerance Thresholds	

I. INTRODUCTION

As part of the proposed Airport Campus building plan, the Town of North Castle Planning Board requested that Toll Brothers provide details on the anticipated Integrated Pest Management (IPM) program for the property.

For context, an IPM program was implemented by MBIA in 2003 on its existing headquarters site and was planned to continue in the future to encompass the proposed MBIA expansion, as discussed in that (now defunct) project's accepted Final Environmental Impact Statement (FEIS), dated 09/2003.

Based on those requirements, as well as additional stipulations from the Town of North Castle, Toll Brothers plans to implement a plant health care program for trees and shrubs on the property that complies with the following:

- The health of landscape plantings shall be assessed by a professional experienced in the practice of Integrated Pest Management.

- The IPM professional shall report any deterioration in the health of the landscaping or pest infestations and prescribe a remedial action program consistent with the most environmentally sensitive agents and maintenance as is practicable.

- Appropriate treatment measures will only be undertaken when weed and/or pest damage has exceeded established threshold levels - low priority area will tolerate 25% weeds or pest damage, medium priority area 15%, and high priority area 10%.

- Only low phosphorous fertilizers shall be used.

- Pursuant to the Findings Statement, the use of any chemicals (fertilizers, pesticides, herbicides, fungicides, etc.) is prohibited within the Project Site's identified wetland/watercourse proper and within 100 feet of this wetland/watercourse. In addition, no chemicals shall be applied within 100 feet of any existing or proposed stormwater management pond or basin which permanently or periodically retains/detains stormwater.

- Bartlett Tree Experts shall prepare and submit annual reports to Toll Brothers, which will include periodic landscape inspection reports and a description of remedial action taken, by location, during the preceding year.

II. CONTRACTOR INFORMATION

Toll Brothers intends to contract Bartlett Tree Experts to implement the IPM program for the trees and shrubs. A technical report describing the company's approach to IPM can be found in Appendix B.

About Bartlett Tree Experts

The F.A. Bartlett Tree Expert Company was founded in 1907 by Francis A. Bartlett, and today is the world's leading scientific tree and shrub care company. The organization's current chairman, Robert A. Bartlett Jr., represents the third generation of Bartlett family management. Bartlett has offices in 28 U.S. states, Canada, Ireland and Great Britain. Services include pruning, fertilization, pest and disease management, cabling and bracing, soil analysis, tree lightning protection systems, tree/stump removal, and GIS tree inventories. The corporate headquarters is located in Stamford, Connecticut, and The Bartlett Tree Research Laboratories are located in Charlotte, North Carolina. Highlights of the company include:

- 1,500+ employees worldwide including highly skilled arborists who understand the unique needs of the plant life in the areas in which they operate.
- The 350-acre Bartlett Tree Research Laboratories in Charlotte, NC where new discoveries are continually made to benefit the industry as well as customers.
- A staff of scientists including Ph.D.'s and technicians trained in plant pathology, entomology and physiology that aid our field staff in plant diagnosis and treatment.
- An unsurpassed safety record in the arboricultural field with a dedication to ongoing training in safety techniques and procedures.
- Recognition in the arboricultural industry for outstanding services, knowledge, and professionalism.
- All U.S. offices are TCIA accredited – the largest fully accredited tree care firm in the United States.

Local Office

Service for the Airport Campus would be by Bartlett's Elmsford, NY office. Plant health care clients of this office include: Cortlandt Ridge HOA and Valeria HOA (via Katonah Management Services), Central Park Conservancy, Columbia University, Town of Rye.

Experience – Onsite Personnel

Laura Sarzaba

Role onsite: monitoring, report preparation, primary point of contact

Contact Information:

Bartlett Tree Experts, 2240 Saw Mill River Road, Elmsford NY 10523

914-306-3352, lsarzaba@bartlett.com

Education:

2018 SUNY Farmingdale: Associate of Applied Science, Horticulture

2006 Mount Holyoke College: Bachelor of Arts, Sociology

Experience:

17 years of industry experience, including as a Plant Health Care Specialist applying treatments, at the corporate level in marketing and administrative support, and as an Arborist Representative (current). The Arborist Representative position involves the assessment of arboricultural issues with an emphasis on pruning, pest, disease, soil management/diagnosis of trees and shrubs, diagnostic sampling, and tree risk assessment.

Certifications:

ISA Certified Arborist #NE7389A

ISA Tree Risk Assessment Qualified

Certified New York Pesticide Applicator #C2899022

Jeremy DeSimone

Role onsite: Plant health care treatments and non-chemical interventions (i.e. pruning, root collar excavations, etc. as needed)

Contact Information:
Bartlett Tree Experts, 2240 Saw Mill River Road, Elmsford NY 10523
914-592-4520, jdesimone@bartlett.com

Experience:

2016–Present: Bartlett Inventory Solutions (BIS) Regional Inventory Arborist

This position involves support responsibilities in arboriculture with emphasis on GPS/GIS, conducting tree inventories, creating management plans, and performing tree risk assessments. Specific duties include: creating unique data collection forms, utilizing high-accuracy GPS equipment, conducting tree inventories and tree risk assessments, utilizing Bartlett's ArborScope™ web-based management program, creating tree risk assessment and mitigation reports, and writing management plans.

1998–Present: Bartlett Tree Experts, Plant Health Care Specialist

This involves field responsibilities in arboriculture with emphasis on monitoring, diagnosing, and treating plant pests and diseases. Includes performing all functions of the integrated pest management program, including administration, scheduling, inspections, sampling, treatments, equipment maintenance, report writing, and customer relations.

Certifications:

ISA Certified Arborist #NY0682A

ISA Tree Risk Assessment Qualified

Certified New York Pesticide Applicator # C3811993

III. IPM METHODOLOGY AND IMPLEMENTATION

Monitoring and Reporting Schedule

With health of the watershed in mind, Toll Brothers intends to implement a small, low-input IPM program. Upon project completion, two thorough monitoring visits are to be performed each growing season of the first three years, with each visit followed up with spot treatment as prescribed by the monitoring Arborist. Following year three, one thorough monitor visit will be performed at the beginning of each growing season. Recommendations will also be made for changes to cultural practices (i.e. irrigation adjustments, removal/swapping for more suitable species in difficult environments, mulch depth) to improve landscape health.

Additional monitoring and/or treatment visits may be recommended by the monitoring arborist, depending on site conditions.

An annual report will be prepared by Bartlett and submitted to Toll Brothers that includes all landscape inspection reports and a description of remedial action taken, by location, during the preceding year.

Product Use

The schedule below lists materials that may be used during Bartlett Monitor inspections, as of December 2023. Changes to products may occur due to shifting regulations and/or new recommendations for management of certain pests and disease issues from the Bartlett Research Laboratories. An updated usage schedule will be provided at least annually.

Products: Adorn, Astro, Badge X2, Baseline, Bifenamite 2SC, Conserve SC, DeerPro Spring/Summer, Distance IGR, Lucid, Myclotect, Protect DF, Pageant Fungicide, Pyronyl Crop Spray, Mefenoxam 2 AQ, Reliant, RTSA Horticultural Oil, Subdue GR, Talstar P, Triact 70, Xytect 2F, Tourney, Torque, TriStar 8.5SL, Transtect, Acelpryn, Altus, Microthiol Disperss, M-Pede, Orkestra, Onyx Pro, Badge SC

NY product labels and material safety data sheets for each of the above can be found at: https://www.bartlett.com/Product_Labels/newyork.cfm

Fertilizers that may be use on trees and shrubs:

Boost granular (30-0-10)

Boost NK liquid (20-0-6)

Note: neither of these products contain phosphorus.

Any herbicide treatments for invasive plants would be recommended separately, and not included in IPM treatment visits. Labels for those treatments would be provided along with those recommendations depending on the target plant.

Management Zones

Pursuant to the Findings Statement, the use of any chemicals (fertilizers, pesticides, herbicides, fungicides, etc.) is prohibited within the Project Site's identified wetland/watercourse proper and within 100 feet of this wetland/watercourse. In addition, no chemicals shall be applied within 100 feet of any existing or proposed stormwater management pond or basin which permanently or periodically retains/detains stormwater.

The two IPM Management Zones for the property, as depicted on Figure 1, are as follows:

Zone	Management Plan
1	No treatments (pesticide, fertilizer or herbicide) to be made in this zone. Includes wooded and natural areas, as well as wetlands, stormwater management basins and ponds, as well as 100' buffer from these areas.
2	Ornamental trees and shrubs appropriately far from water management areas may be spot treated based on IPM monitoring thresholds.

In zone 2, appropriate treatment measures will only be undertaken when weed and/or pest damage has exceeded established threshold levels depicted in Figure 2. High priority areas (A) will tolerate 25% disease or pest damage, medium priority areas (B) will tolerate 10%, and low priority (C) areas will tolerate 15% disease or pest damage.

As depicted in Figure 2, the areas of least tolerance for weeds or pest damage are those most visible for visitors and the areas adjacent to buildings.

IV. APPENDICES

The Appendices follow this page.

RESEARCH LABORATORY TECHNICAL REPORT

BARTLETT TREE EXPERTS
SCIENTIFIC TREE CARE SINCE 1907

IPM for Landscape Plants

Drew C. Zwart, PhD, Plant Physiology

Maintaining the health and vigor of trees and ornamental plants is the best defense against insects, mites, disease, and other plant stresses. To protect the health of ornamental plants using environmentally sound techniques, a scientific approach to plant care and pest suppression has been developed, commonly called Integrated Pest Management (IPM).

Components of a typical IPM program

Professional Monitoring

A trained plant health care specialist (monitor) inspects specified plants on each property. Using a variety of techniques, the technician will detect and prevent serious plant health problems. Examples of these techniques are using an insect pheromone trap to determine when borers are on a property before they lay eggs (Figure 1) on susceptible plants or the release of biological control organisms to suppress pest populations without chemical treatments.

Figure 1: Clearwing borer trap

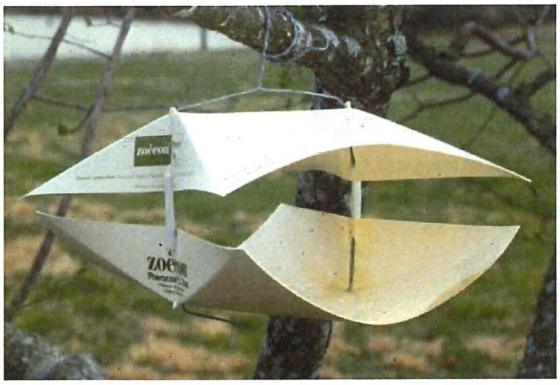

Safe Treatments

Once a potential problem has been identified, the most effective and safe solution is specifically tailored to arrest its development. IPM uses only ecologically sound, biodegradable materials and targets only affected plants.

Reporting

After each inspection, the property owner or manager receives a detailed report of problems that have developed, which plants were affected, and what action was taken by the plant health care specialist. This record keeping system helps monitor plant health and can be helpful in predicting future outbreaks.

Is IPM new?

Applying IPM principles to the managed landscape is a fairly new concept, but practices are based on the IPM models used successfully in agricultural plant protection for many years. The Bartlett Tree Research Laboratories has adapted many of those techniques and developed a landscape IPM program uniquely suited for landscape plants.

What are the advantages of IPM?

IPM programs allow for dramatic reductions in chemical input while maintaining landscape plant health and aesthetic value. This is achieved by monitoring plant health through regular inspections and choosing the most sustainable and targeted treatment options for specific identified pests. Treatments are applied only to augment natural biological control and specifically target only those plants threatened by the identified pest (Figure 2).

Figure 2: Spray treatments are carefully applied only to plants found to be infested with a pest

This is very different from the "cover spray" approach. Cover spray applications are made without inspecting pest levels and are often incorrectly timed, after most of the damage has occurred. Cover sprays generally use broad spectrum pesticides that may have negative impacts on non-target, beneficial organisms. This threatens important pollinator and naturally occurring biological control organisms, potentially leading to chemical dependency, pest resistance, and continuous spraying to try to control pest outbreaks.

What else is different about IPM?

Diseases and insects are often not the true cause of declining plant health. Instead, cultural problems such as soil compaction, poor pruning methods, and incorrect plant selection lead to poor plant condition. These are problems that are often overlooked when a routine spray program alone is implemented. With IPM, properties are visited frequently and these problems can be identified while there is time for corrective action (Figure 3). In many cases, fixing cultural problems will eliminate secondary disease and insect issues without any additional treatments.

Figure 3: A plant health care specialist using a hand lens to inspect plants

Founded in 1926, The Bartlett Tree Research Laboratories is the research wing of Bartlett Tree Experts. Scientists here develop guidelines for all of the Company's services. The Lab also houses a state-of-the-art plant diagnostic clinic and provides vital technical support to Bartlett arborists and field staff for the benefit of our clients.

PLANT SCHEDULE

EVERGREEN TREES	QTY	BOTANICAL / COMMON NAME	SIZE	ROOT COND.	REMARKS
ACC	84	Abies concolor / White Fir	6` - 8` HT.	B & B	
PA	71	Picea abies / Norway Spruce	8`-10` HT	B & B	
PG	67	Picea glauca / White Spruce	8`-10` HT	B & B	
PS	83	Pinus strobus / White Pine	6` - 8` HT.	B & B	
TO	40	Thuja x 'Green Giant' / Green Giant Arborvitae	6` - 8` HT.	B & B	

FLOWERING & UNDERSTORY TREES	QTY	BOTANICAL / COMMON NAME	SIZE	ROOT COND.	REMARKS
AC	107	Amelanchier canadensis / Shadblow Serviceberry	8` - 10` HT.	B & B	
BN	27	Betula nigra `Heritage` / Heritage River Birch	7`-8` HT.	B & B	
CC	45	Cercis canadensis / Eastern Redbud Multi-trunk	8` - 10` HT.	B & B	
CFW	34	Cornus florida 'White' / White Flowering Dogwood	8` - 10` HT.	B & B	
CFR	41	Cornus florida rubra / Pink Flowering Dogwood	8` - 10` HT.	B & B	

DECIDUOUS TREES	QTY	BOTANICAL / COMMON NAME	SIZE	ROOT COND.	REMARKS
AG	38	Acer rubrum `October Glory` / October Glory Maple	3" - 3 1/2" Cal.	B & B	
AB2	22	Acer rubrum 'Bowhall' / Bowhall Red Maple	2 1/2" - 3" CAL.	3"Cal	
AR	42	Acer rubrum 'Red Sunset' / Red Maple 'Red Sunset'	3" - 3 1/2" Cal.	B & B	
LS2	6	Liquidambar styraciflua / Sweet Gum	2" - 2 1/2" CAL.	B & B	
LS	18	Liquidambar styraciflua 'Slender Silhouette' / Slender Silhouette Sweet Gum	2" - 2 1/2" CAL.	B & B	
NS	25	Nyssa sylvatica / Black gum	2" - 2 1/2" CAL.	B & B	
PO	9	Platanus occidentalis / American Sycamore	3" - 3 1/2" CAL.	B & B	
PR	9	Prunus serotina / Black Cherry	2" - 2 1/2" CAL.	B & B	
QA	17	Quercus alba / White Oak	2" - 3 1/2" CAL.	B & B	
QB	14	Quercus bicolor / Swamp White Oak	2" - 2 1/2" CAL.	B & B	
QM2	18	Quercus macrocarpa / Burr Oak	2 1/2" - 3" CAL.	B & B	
QP	35	Quercus palustris / Pin Oak	2" - 3 1/2" CAL.	B & B	
QR	33	Quercus rubra / Red Oak	2" - 3 1/2" CAL.	B & B	
TD	11	Taxodium distichum / Bald Cypress	2 1/2" - 3" CAL.	B & B	
UA	5	Ulmus americana / American Elm 'Princeton'	3" - 3 1/2" CAL.	B & B	

SEED MIXES:

SEED MIX #1

1. WETLAND RESTORATION SEED MIX SHALL BE ERNST FACW WETLAND MEADOW MIX

   SEEDING RATE: 20 LB PER ACRE, OR 1/2 LB PER 1,000 SQ FT WITH A COVER CROP. FOR A COVER CROP USE ONE OF THE FOLLOWING: GRAIN RYE (1 SEP TO 30 APR; 30 LBS/ACRE), JAPANESE MILLET (1 MAY TO 31 AUG; 10 LBS/ACRE), OR BARNYARD GRASS (1 MAY TO 31 AUG; 10 LBS/ACRE).

SEED MIX #2

2. DETENTION BASIN SEED MIX SHALL BE ERNST NATIVE DETENTION AREA MIX ITEM NUMBER: ERNMX-183

   SEEDING RATE: 20 LB PER ACRE, OR 1/2 LB PER 1,000 SQ FT FOR A COVER CROP: GRAIN RYE (1 SEP TO 30 APR; 30 LBS/ACRE), JAPANESE MILLET (1 MAY TO 31 AUG; 10 LBS/ACRE). GRASSES & GRASS-LIKE SPECIES-HERBACEOUS PERENNIAL; STORMWATER MANAGEMENT

3. SLOPE SEED MIX SHALL BE ERNST NATIVE STEEP SLOPE MIX W/GRAIN RYE ITEM NUMBER: ERNMX-181-2 WHICH SHALL BE INSTALLED ON ALL SLOPES 3 HORIZONTAL TO 1 VERTICAL OR GREATER, EXCEPT IN LOCATIONS BETWEEN TOWNHOME UNITS, AND/OR AS DIRECTED BY PROJECT ENGINEER/LANDSCAPE ARCHITECT.

   SEEDING RATE: 75 LB PER ACRE EROSION CONTROL & REVEGETATION; GRASSES & GRASS-LIKE SPECIES - HERBACEOUS PERENNIAL; HERBACEOUS FLOWERING SPECIES - HERBACEOUS PERENNIAL USE THIS FORMULA WITH GRAIN RYE AS A COVER CROP (FROM AUGUST 1ST-FEBRUARY 15TH).

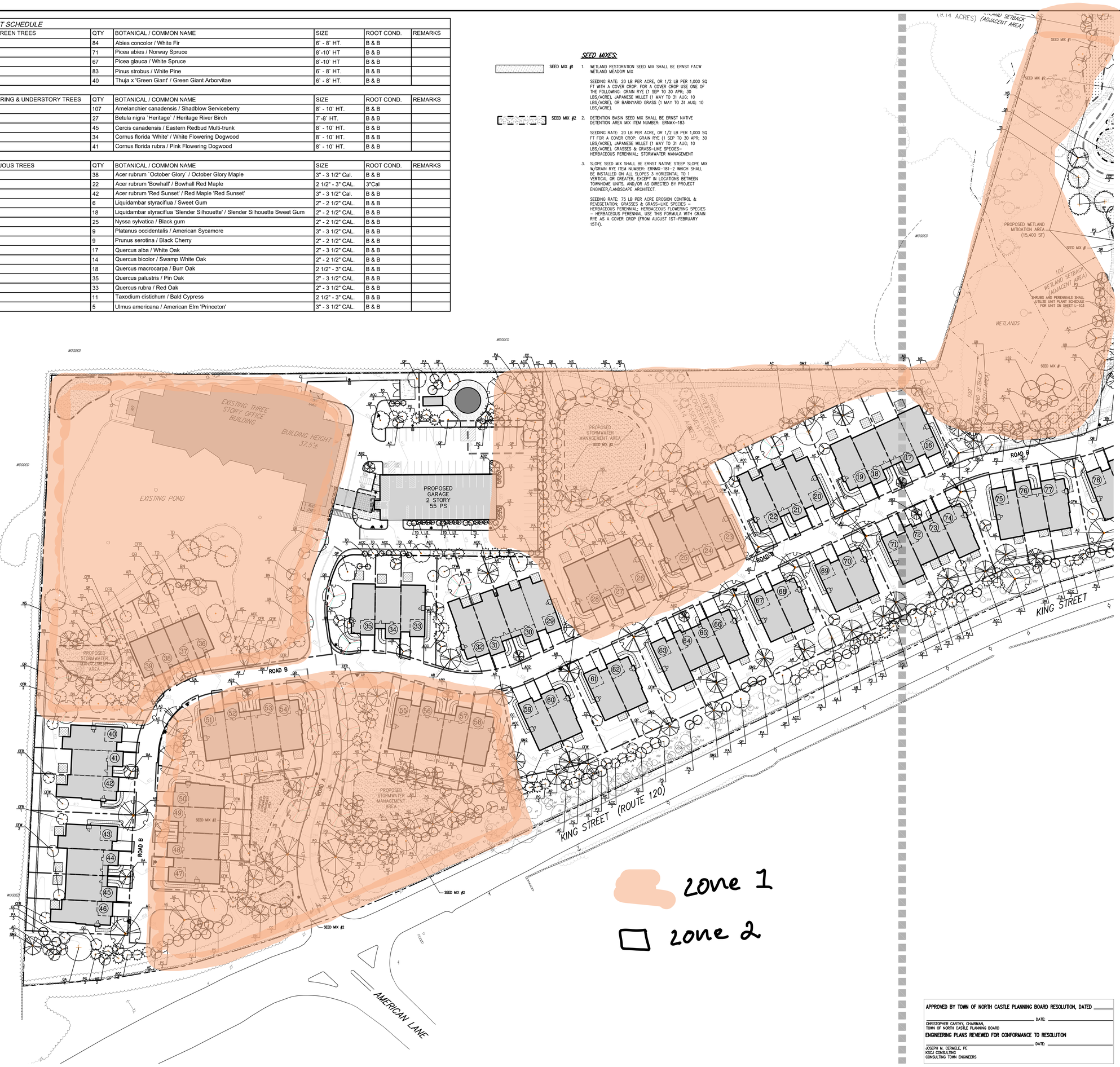

LEGEND

- EXISTING PROPERTY LINE
- ADJACENT PROPERTY LINE
- EXISTING SETBACK LINE
- WLF-63 WLF-64 WLF-65 EXISTING WETLAND LINE AND DELINEATION
- EXISTING BUILDING OVERHANG
- EXISTING BUILDING LINE
- EXISTING PAVEMENT EDGE
- EXISTING CURB LINE
- EXISTING STONE WALL
- EXISTING RETAINING WALL
- EXISTING GUIDE RAIL
- EXISTING FENCE
- 710 M EXISTING TREE AND DESIGNATION
- EXISTING TREE LINE
- EXISTING DIRECTIONAL ARROWS
- EXISTING PAINT
- EXISTING UTILITY POLE
- EXISTING LIGHT POLE
- EXISTING SIGN
- EXISTING FEATURE TO BE REMOVED
- PROPOSED BUILDING LINE
- PROPOSED CONCRETE CURB
- PROPOSED SAWCUT LINE
- PROPOSED CONCRETE SIDEWALK
- PROPOSED MONOLITHIC CONCRETE SIDEWALK & CURB
- PROPOSED DROP CURB AND RAMP
- PROPOSED HEAVY DUTY PAVEMENT
- PROPOSED PERVIOUS PAVEMENT
- PROPOSED CONCRETE APRON
- PROPOSED MULCH TRAIL
- PROPOSED RETAINING WALL (DESIGN BY OTHERS)
- PROPOSED FENCE
- PROPOSED DOUBLE ARM LIGHTING STANDARD (DESIGN BY OTHERS)
- PROPOSED SINGLE ARM LIGHTING STANDARD (DESIGN BY OTHERS)
- 2-4" WIDE YELLOW LINES 8"O.C.
- 12" WIDE WHITE STOP LINE
- TRAFFIC SIGN LOCATION & DESIGNATION
- PROPOSED SHADE TREE
- PROPOSED FLOWERING TREE
- PROPOSED CONIFEROUS TREE
- PROPOSED SHRUBS

NOTES:

1. ALL PLANT MATERIAL SHALL BE FIRST QUALITY STOCK. PLANTED MATERIAL AND METHODS OF INSTALLATION SHALL CONFORM TO THE AMERICAN NURSERY AND LANDSCAPE ASSOCIATION, AMERICAN STANDARD FOR NURSERY STOCK, LATEST EDITION.
2. ALL AREAS OF THE SITE NOT OCCUPIED BY BUILDING OR PAVEMENT AND NOT SPECIFIED AS BEING PLANTED WITH TREES, SHRUBS OR GROUND COVER SHALL BE LAWN.
3. ALL PLANTING BEDS SHALL BE MULCHED WITH 3" OF BROWN MULCH. MULCH SHALL BE CLEAN, NON-DYED, TOXIC FREE, SHREDDED HARDWOOD.
4. PLANT MATERIALS AS SPECIFIED ON THE DRAWINGS AND DELIVERED TO THE SITE SHALL BE NURSERY GROWN AND CERTIFIED TRUE TO THEIR GENUS, SPECIES AND VARIETY. SUBSTITUTIONS ARE NOT PERMITTED WITHOUT THE PROJECT LANDSCAPE ARCHITECTS WRITTEN APPROVAL.
5. ALL LANDSCAPING SHALL CONTINUE TO BE MAINTAINED IN A HEALTHY GROWING CONDITION THROUGHOUT THE DURATION OF THE PROJECT. ANY PLANTING NOT SO MAINTAINED SHALL BE REPLACED WITH NEW PLANTS AT THE BEGINNING OF THE NEXT, IMMEDIATELY FOLLOWING, GROWING SEASON.
6. ALL TREES AND SHRUBS SHALL BE PRUNED AND SHAPED AND BE SUBJECT TO THE APPROVAL OF THE PROJECT LANDSCAPE ARCHITECT AND GOVERNMENTAL AUTHORITIES HAVING JURISDICTION.
7. PLANTING STOCK SHALL BE WELL-BRANCHED AND WELL-FORMED, SOUND, VIGOROUS, HEALTHY, FREE FROM DISEASE, SUN-SCALE, WINDBURN, ABRASION, AND HARMFUL INSECTS OR INSECTS EGGS; AND SHALL HAVE HEALTHY, NORMAL UNBROKEN ROOT SYSTEMS. DECIDUOUS TREES AND SHRUBS SHALL BE SYMMETRICALLY DEVELOPED, OF UNIFORM HABIT OF GROWTH, WITH STRAIGHT TRUNKS OR STEMS, AND FREE FROM OBJECTIONABLE DISFIGUREMENTS. EVERGREEN TREES AND SHRUBS SHALL HAVE WELL-DEVELOPED SYMMETRICAL TOPS WITH TYPICAL SPREAD OF BRANCHES FOR EACH PARTICULAR SPECIES OR VARIETY. ONLY VINES AND GROUND COVER PLANTS WELL ESTABLISHED IN REMOVAL CONTAINERS, INTEGRAL CONTAINERS, OR FORMED HOMOGENEOUS SOIL SECTIONS SHALL BE USED. PLANTS SHALL BE GROWN UNDER CLIMATIC CONDITIONS SIMILAR TO THOSE IN THE LOCALITY OF THE PROJECT.
8. ALL STOCK SHALL BE BALLED AND BURLAPPED OR CONTAINER GROWN STOCK, UNLESS OTHERWISE SPECIFIED. BAREROOT STOCK OF ANY KIND IS UNACCEPTABLE UNLESS SPECIFIED.
9. ALL PLANTING BEDS, LAWNS AND LANDSCAPED AREAS SHALL RECEIVE A MINIMUM 4" THICK LAYER OF TOPSOIL, UNLESS OTHERWISE SPECIFIED

APPROVED BY TOWN OF NORTH CASTLE PLANNING BOARD RESOLUTION, DATED _____

_____ DATE: _____
CHRISTOPHER CARTHY, CHAIRMAN,
TOWN OF NORTH CASTLE PLANNING BOARD

ENGINEERING PLANS REVIEWED FOR CONFORMANCE TO RESOLUTION

_____ DATE: _____
JOSEPH M. CERMELE, PE
KSCJ CONSULTING
CONSULTING TOWN ENGINEERS

GRAPHIC SCALE
40 0 20 40 80 160
(IN FEET)
1 inch = 40 ft.

No.	Revision	Date	By
1.	REVISED FEIS	01/20/2023	BMS
2.	PLANNING BOARD SUBMISSION	10/06/2023	BMS

Previous Editions Obsolete

APPLICANT/OWNER:

AIRPORT CAMPUS I-V LLC
113 KING STREET / KING STREET
POUND RIDGE, NY 10576

JMC Planning, Engineering, Landscape Architecture & Land Surveying, PLLC
JMC Site Development Consultants, LLC
John Meyer Consulting, Inc.
120 BEDFORD ROAD - ARMONK, NY 10504
voice 914.273.5225 - fax 914.273.2102
www.jmcpllc.com

LANDSCAPE PLAN

AIRPORT CAMPUS
113 KING STREET (NY ROUTE 120)
NORTH CASTLE, NY 10504

ANY ALTERATION OF PLANS, SPECIFICATIONS, PLATS AND REPORTS BEARING THE SEAL OF A LICENSED PROFESSIONAL ENGINEER OR LICENSED LAND SURVEYOR IS A VIOLATION OF SECTION 7209 OF THE NEW YORK STATE EDUCATION LAW, EXCEPT AS PROVIDED FOR BY SECTION 7209, SUBSECTION 2.

Drawn:	JJ
Approved:	AG
Scale:	1" = 40'
Date:	09/21/2022
Project No:	15072
15072-LAND	L-101 LAND.scr
Drawing No:	L-101

COPYRIGHT © 2023 by JMC All Rights Reserved. No part of this document may be reproduced, stored in a retrieval system, or transmitted, in any form or by means, electronic, mechanical, photocopying, recording or otherwise, without the prior written permission of JMC PLANNING, ENGINEERING, LANDSCAPE ARCHITECTURE & LAND SURVEYING, PLLC (JMC). Any modifications or alterations to this document without the written permission of JMC shall render them invalid and unusable.
PROCLAIMS, LET LAWYERS CONSULTING THE JMC, JMC

NOT FOR CONSTRUCTION

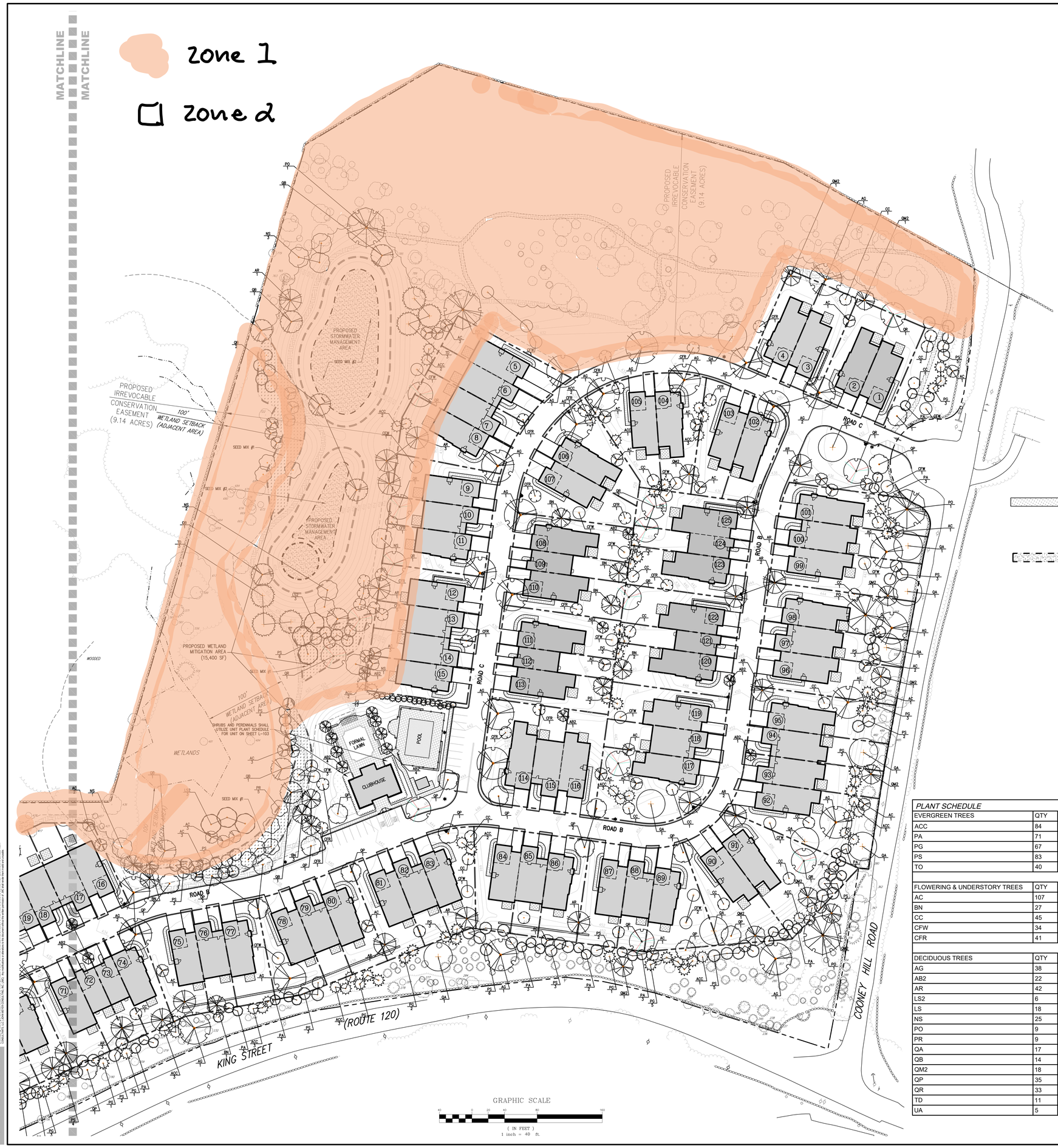

NOTES:

1. ALL PLANT MATERIAL SHALL BE FIRST QUALITY STOCK. PLANTED MATERIAL AND METHODS OF INSTALLATION SHALL CONFORM TO THE AMERICAN NURSERY AND LANDSCAPE ASSOCIATION, AMERICAN STANDARD FOR NURSERY STOCK, LATEST EDITION.
2. ALL AREAS OF THE SITE NOT OCCUPIED BY BUILDING OR PAVEMENT AND NOT SPECIFIED AS BEING PLANTED WITH TREES, SHRUBS OR GROUND COVER SHALL BE LAWN.
3. ALL PLANTING BEDS SHALL BE MULCHED WITH 3" OF BROWN MULCH. MULCH SHALL BE CLEAN, NON-DYED, TOXIC FREE, SHREDDED HARDWOOD.
4. PLANT MATERIALS AS SPECIFIED ON THE DRAWINGS AND DELIVERED TO THE SITE SHALL BE NURSERY GROWN AND CERTIFIED TRUE TO THEIR GENUS, SPECIES AND VARIETY. SUBSTITUTIONS ARE NOT PERMITTED WITHOUT THE PROJECT LANDSCAPE ARCHITECTS WRITTEN APPROVAL.
5. ALL LANDSCAPING SHALL CONTINUE TO BE MAINTAINED IN A HEALTHY GROWING CONDITION THROUGHOUT THE DURATION OF THE PROJECT. ANY PLANTING NOT SO MAINTAINED SHALL BE REPLACED WTH NEW PLANTS AT THE BEGINNING OF THE NEXT, IMMEDIATELY FOLLOWING, GROWING SEASON.
6. ALL TREES AND SHRUBS SHALL BE PRUNED AND SHAPED AND BE SUBJECT TO THE APPROVAL OF THE PROJECT LANDSCAPE ARCHITECT AND GOVERNMENTAL AUTHORITIES HAVING JURISDICTION.
7. PLANTING STOCK SHALL BE WELL-BRANCHED AND WELL-FORMED, SOUND, VIGOROUS, HEALTHY, FREE FROM DISEASE, SUN-SCALE, WINDBURN, ABRASION, AND HARMFUL INSECTS OR INSECTS EGGS; AND SHALL HAVE HEALTHY, NORMAL UNBROKEN ROOT SYSTEMS. DECIDUOUS TREES AND SHRUBS SHALL BE SYMMETRICALLY DEVELOPED, OF UNIFORM HABIT OF GROWTH, WITH STRAIGHT TRUNKS OR STEMS, AND FREE FROM OBJECTIONABLE DISFIGUREMENTS. EVERGREEN TREES AND SHRUBS SHALL HAVE WELL-DEVELOPED SYMMETRICAL TOPS WITH TYPICAL SPREAD OF BRANCHES FOR EACH PARTICULAR SPECIES OR VARIETY. ONLY VINES AND GROUND COVER PLANTS WELL ESTABLISHED IN REMOVAL CONTAINERS, INTEGRAL CONTAINERS, OR FORMED HOMOGENEOUS SOIL SECTIONS SHALL BE USED. PLANTS SHALL BE GROWN UNDER CLIMATIC CONDITIONS SIMILAR TO THOSE IN THE LOCALITY OF THE PROJECT.
8. ALL STOCK SHALL BE BALLED AND BURLAPPED OR CONTAINER GROWN STOCK, UNLESS OTHERWISE SPECIFIED. BAREROOT STOCK OF ANY KIND IS UNACCEPTABLE UNLESS SPECIFIED.
9. ALL PLANTING BEDS, LAWNS AND LANDSCAPED AREAS SHALL RECEIVE A MINIMUM 4" THICK LAYER OF TOPSOIL, UNLESS OTHERWISE SPECIFIED

LEGEND

- EXISTING PROPERTY LINE
- ADJACENT PROPERTY LINE
- EXISTING SETBACK LINE
- EXISTING WETLAND LINE AND DELINEATION (WLF-63, WLF-64, WLF-65)
- EXISTING BUILDING OVERHANG
- EXISTING BUILDING LINE
- EXISTING PAVEMENT EDGE
- EXISTING CURB LINE
- EXISTING STONE WALL
- EXISTING RETAINING WALL
- EXISTING GUIDE RAIL
- EXISTING FENCE
- EXISTING TREE AND DESIGNATION (710 M)
- EXISTING TREE LINE
- EXISTING DIRECTIONAL ARROWS
- EXISTING PAINT
- EXISTING UTILITY POLE
- EXISTING LIGHT POLE
- EXISTING SIGN
- EXISTING FEATURE TO BE REMOVED
- PROPOSED BUILDING LINE
- PROPOSED CONCRETE CURB
- PROPOSED SAWCUT LINE
- PROPOSED CONCRETE SIDEWALK
- PROPOSED MONOLITHIC CONCRETE SIDEWALK & CURB
- PROPOSED DROP CURB AND RAMP
- PROPOSED HEAVY DUTY PAVEMENT
- PROPOSED PERVIOUS PAVEMENT
- PROPOSED CONCRETE APRON
- PROPOSED MULCH TRAIL
- PROPOSED RETAINING WALL (DESIGN BY OTHERS)
- PROPOSED FENCE
- PROPOSED DOUBLE ARM LIGHTING STANDARD (DESIGN BY OTHERS)
- PROPOSED SINGLE ARM LIGHTING STANDARD (DESIGN BY OTHERS)
- 2-4" WIDE YELLOW LINES 8"O.C.
- 12" WIDE WHITE STOP LINE
- TRAFFIC SIGN LOCATION & DESIGNATION
- PROPOSED SHADE TREE
- PROPOSED FLOWERING TREE
- PROPOSED CONIFEROUS TREE
- PROPOSED SHRUBS

SEED MIXES:

SEED MIX #1

1. WETLAND RESTORATION SEED MIX SHALL BE ERNST FACW WETLAND MEADOW MIX

   SEEDING RATE: 20 LB PER ACRE, OR 1/2 LB PER 1,000 SQ FT WITH A COVER CROP. FOR A COVER CROP USE ONE OF THE FOLLOWING: GRAIN RYE (1 SEP TO 30 APR; 30 LBS/ACRE), JAPANESE MILLET (1 MAY TO 31 AUG; 10 LBS/ACRE), OR BARNYARD GRASS (1 MAY TO 31 AUG; 10 LBS/ACRE).

SEED MIX #2

2. DETENTION BASIN SEED MIX SHALL BE ERNST NATIVE DETENTION AREA MIX ITEM NUMBER: ERNMX-183

   SEEDING RATE: 20 LB PER ACRE, OR 1/2 LB PER 1,000 SQ FT FOR A COVER CROP: GRAIN RYE (1 SEP TO 30 APR; 30 LBS/ACRE), JAPANESE MILLET (1 MAY TO 31 AUG; 10 LBS/ACRE). GRASSES & GRASS-LIKE SPECIES- HERBACEOUS PERENNIAL; STORMWATER MANAGEMENT

3. SLOPE SEED MIX SHALL BE ERNST NATIVE STEEP SLOPE MIX W/GRAIN RYE ITEM NUMBER: ERNMX-181-2 WHICH SHALL BE INSTALLED ON ALL SLOPES 3 HORIZONTAL TO 1 VERTICAL OR GREATER, EXCEPT IN LOCATIONS BETWEEN TOWNHOME UNITS, AND/OR AS DIRECTED BY PROJECT ENGINEER/LANDSCAPE ARCHITECT.

   SEEDING RATE: 75 LB PER ACRE EROSION CONTROL & REVEGETATION; GRASSES & GRASS-LIKE SPECIES - HERBACEOUS PERENNIAL; HERBACEOUS FLOWERING SPECIES - HERBACEOUS PERENNIAL USE THIS FORMULA WITH GRAIN RYE AS A COVER CROP (FROM AUGUST 1ST-FEBRUARY 15TH).

APPROVED BY TOWN OF NORTH CASTLE PLANNING BOARD RESOLUTION, DATED _____

_____ DATE: _____
CHRISTOPHER CARTHY, CHAIRMAN,
TOWN OF NORTH CASTLE PLANNING BOARD

ENGINEERING PLANS REVIEWED FOR CONFORMANCE TO RESOLUTION

_____ DATE: _____
JOSEPH M. CERMELE, PE
KSCJ CONSULTING
CONSULTING TOWN ENGINEERS

PLANT SCHEDULE

EVERGREEN TREES	QTY	BOTANICAL / COMMON NAME	SIZE	ROOT COND.	REMARKS
ACC	84	Abies concolor / White Fir	6` - 8` HT.	B & B	
PA	71	Picea abies / Norway Spruce	8`-10` HT	B & B	
PG	67	Picea glauca / White Spruce	8`-10` HT	B & B	
PS	83	Pinus strobus / White Pine	6` - 8` HT.	B & B	
TO	40	Thuja x 'Green Giant' / Green Giant Arborvitae	6` - 8` HT.	B & B	

FLOWERING & UNDERSTORY TREES	QTY	BOTANICAL / COMMON NAME	SIZE	ROOT COND.	REMARKS
AC	107	Amelanchier canadensis / Shadblow Serviceberry	8` - 10` HT.	B & B	
BN	27	Betula nigra `Heritage` / Heritage River Birch	7`-8` HT.	B & B	
CC	45	Cercis canadensis / Eastern Redbud Multi-trunk	8` - 10` HT.	B & B	
CFW	34	Cornus florida 'White' / White Flowering Dogwood	8` - 10` HT.	B & B	
CFR	41	Cornus florida rubra / Pink Flowering Dogwood	8` - 10` HT.	B & B	

DECIDUOUS TREES	QTY	BOTANICAL / COMMON NAME	SIZE	ROOT COND.	REMARKS
AG	38	Acer rubrum `October Glory` / October Glory Maple	3" - 3 1/2" Cal.	B & B	
AB2	22	Acer rubrum 'Bowhall' / Bowhall Red Maple	2 1/2" - 3" CAL.	3"Cal	
AR	42	Acer rubrum 'Red Sunset' / Red Maple 'Red Sunset'	3" - 3 1/2" Cal.	B & B	
LS2	6	Liquidambar styraciflua / Sweet Gum	2" - 2 1/2" CAL.	B & B	
LS	18	Liquidambar styraciflua 'Slender Silhouette' / Slender Silhouette Sweet Gum	2" - 2 1/2" CAL.	B & B	
NS	25	Nyssa sylvatica / Black gum	2" - 2 1/2" CAL.	B & B	
PO	9	Platanus occidentalis / American Sycamore	3" - 3 1/2" CAL.	B & B	
PR	9	Prunus serotina / Black Cherry	2" - 2 1/2" CAL.	B & B	
QA	17	Quercus alba / White Oak	2" - 3 1/2" CAL.	B & B	
QB	14	Quercus bicolor / Swamp White Oak	2" - 2 1/2" CAL.	B & B	
QM2	18	Quercus macrocarpa / Burr Oak	2 1/2" - 3" CAL.	B & B	
QP	35	Quercus palustris / Pin Oak	2" - 3 1/2" CAL.	B & B	
QR	33	Quercus rubra / Red Oak	2" - 3 1/2" CAL.	B & B	
TD	11	Taxodium distichum / Bald Cypress	2 1/2" - 3" CAL.	B & B	
UA	5	Ulmus americana / American Elm 'Princeton'	3" - 3 1/2" CAL.	B & B	

No.	Revision	Date	By
1.	REVISED FEIS	01/20/2023	BMS
2.	PLANNING BOARD SUBMISSION	10/06/2023	BMS

Previous Editions Obsolete

APPLICANT/OWNER:

AIRPORT CAMPUS I-V LLC
40 WESTCHESTER AVENUE
POUND RIDGE, NY 10576

JMC Planning, Engineering, Landscape Architecture & Land Surveying, PLLC
JMC Site Development Consultants, LLC
John Meyer Consulting, Inc.
120 BEDFORD ROAD - ARMONK, NY 10504
voice 914.273.5225 • fax 914.273.2102
www.jmcpllc.com

LANDSCAPE PLAN

AIRPORT CAMPUS
113 KING STREET (NY ROUTE 120)
NORTH CASTLE, NY 10504

ANY ALTERATION OF PLANS, SPECIFICATIONS, PLATS AND REPORTS BEARING THE SEAL OF A LICENSED PROFESSIONAL ENGINEER OR LICENSED LAND SURVEYOR IS A VIOLATION OF SECTION 7209 OF THE NEW YORK STATE EDUCATION LAW, EXCEPT AS PROVIDED FOR BY SECTION 7209, SUBSECTION 2.

Drawn:	JJ
Approved:	AG
Scale:	1" = 40'
Date:	09/21/2022
Project No:	15072
15072-LAND	L-102
LAND.scr	
Drawing No:	L-102

NOT FOR CONSTRUCTION

COPYRIGHT © 2022 by JMC All Rights Reserved. No part of this document may be reproduced, stored in a retrieval system, or transmitted, in any form or by means, electronic, mechanical, photocopying, recording or otherwise, without the prior written permission of JMC PLANNING, ENGINEERING, LANDSCAPE ARCHITECTURE & LAND SURVEYING, PLLC | JMC SITE DEVELOPMENT CONSULTANTS, LLC | JOHN MEYER CONSULTING, INC. (JMC). Any modifications or alterations to this document without the written permission of JMC shall render them invalid and unusable.

PLANT SCHEDULE

EVERGREEN TREES	QTY	BOTANICAL / COMMON NAME	SIZE	ROOT COND.	REMARKS
ACC	84	Abies concolor / White Fir	6` - 8` HT.	B & B	
PA	71	Picea abies / Norway Spruce	8`-10` HT	B & B	
PG	67	Picea glauca / White Spruce	8`-10` HT	B & B	
PS	83	Pinus strobus / White Pine	6` - 8` HT.	B & B	
TO	40	Thuja x 'Green Giant' / Green Giant Arborvitae	6` - 8` HT.	B & B	
FLOWERING & UNDERSTORY TREES	**QTY**	**BOTANICAL / COMMON NAME**	**SIZE**	**ROOT COND.**	**REMARKS**
AC	107	Amelanchier canadensis / Shadblow Serviceberry	8` - 10` HT.	B & B	
BN	27	Betula nigra `Heritage` / Heritage River Birch	7`-8` HT.	B & B	
CC	45	Cercis canadensis / Eastern Redbud Multi-trunk	8` - 10` HT.	B & B	
CFW	34	Cornus florida 'White' / White Flowering Dogwood	8` - 10` HT.	B & B	
CFR	41	Cornus florida rubra / Pink Flowering Dogwood	8` - 10` HT.	B & B	
DECIDUOUS TREES	**QTY**	**BOTANICAL / COMMON NAME**	**SIZE**	**ROOT COND.**	**REMARKS**
AG	38	Acer rubrum `October Glory` / October Glory Maple	3" - 3 1/2" Cal.	B & B	
AB2	22	Acer rubrum 'Bowhall' / Bowhall Red Maple	2 1/2" - 3" CAL.	3"Cal	
AR	42	Acer rubrum 'Red Sunset' / Red Maple 'Red Sunset'	3" - 3 1/2" Cal.	B & B	
LS2	6	Liquidambar styraciflua / Sweet Gum	2" - 2 1/2" CAL.	B & B	
LS	18	Liquidambar styraciflua 'Slender Silhouette' / Slender Silhouette Sweet Gum	2" - 2 1/2" CAL.	B & B	
NS	25	Nyssa sylvatica / Black gum	2" - 2 1/2" CAL.	B & B	
PO	9	Platanus occidentalis / American Sycamore	3" - 3 1/2" CAL.	B & B	
PR	9	Prunus serotina / Black Cherry	2" - 2 1/2" CAL.	B & B	
QA	17	Quercus alba / White Oak	2" - 3 1/2" CAL.	B & B	
QB	14	Quercus bicolor / Swamp White Oak	2" - 2 1/2" CAL.	B & B	
QM2	18	Quercus macrocarpa / Burr Oak	2 1/2" - 3" CAL.	B & B	
QP	35	Quercus palustris / Pin Oak	2" - 3 1/2" CAL.	B & B	
QR	33	Quercus rubra / Red Oak	2" - 3 1/2" CAL.	B & B	
TD	11	Taxodium distichum / Bald Cypress	2 1/2" - 3" CAL.	B & B	
UA	5	Ulmus americana / American Elm 'Princeton'	3" - 3 1/2" CAL.	B & B	

SEED MIXES:

SEED MIX #1

1. WETLAND RESTORATION SEED MIX SHALL BE ERNST FACW WETLAND MEADOW MIX

   SEEDING RATE: 20 LB PER ACRE, OR 1/2 LB PER 1,000 SQ FT WITH A COVER CROP. FOR A COVER CROP USE ONE OF THE FOLLOWING: GRAIN RYE (1 SEP TO 30 APR; 30 LBS/ACRE), JAPANESE MILLET (1 MAY TO 31 AUG; 10 LBS/ACRE), OR BARNYARD GRASS (1 MAY TO 31 AUG; 10 LBS/ACRE).

SEED MIX #2

2. DETENTION BASIN SEED MIX SHALL BE ERNST NATIVE DETENTION AREA MIX ITEM NUMBER: ERNMX-183

   SEEDING RATE: 20 LB PER ACRE, OR 1/2 LB PER 1,000 SQ FT FOR A COVER CROP: GRAIN RYE (1 SEP TO 30 APR; 30 LBS/ACRE), JAPANESE MILLET (1 MAY TO 31 AUG; 10 LBS/ACRE). GRASSES & GRASS-LIKE SPECIES-HERBACEOUS PERENNIAL; STORMWATER MANAGEMENT

3. SLOPE SEED MIX SHALL BE ERNST NATIVE STEEP SLOPE MIX W/GRAIN RYE ITEM NUMBER: ERNMX-181-2 WHICH SHALL BE INSTALLED ON ALL SLOPES 3 HORIZONTAL TO 1 VERTICAL OR GREATER, EXCEPT IN LOCATIONS BETWEEN TOWNHOME UNITS, AND/OR AS DIRECTED BY PROJECT ENGINEER/LANDSCAPE ARCHITECT.

   SEEDING RATE: 75 LB PER ACRE EROSION CONTROL & REVEGETATION; GRASSES & GRASS-LIKE SPECIES – HERBACEOUS PERENNIAL; HERBACEOUS FLOWERING SPECIES – HERBACEOUS PERENNIAL USE THIS FORMULA WITH GRAIN RYE AS A COVER CROP (FROM AUGUST 1ST-FEBRUARY 15TH).

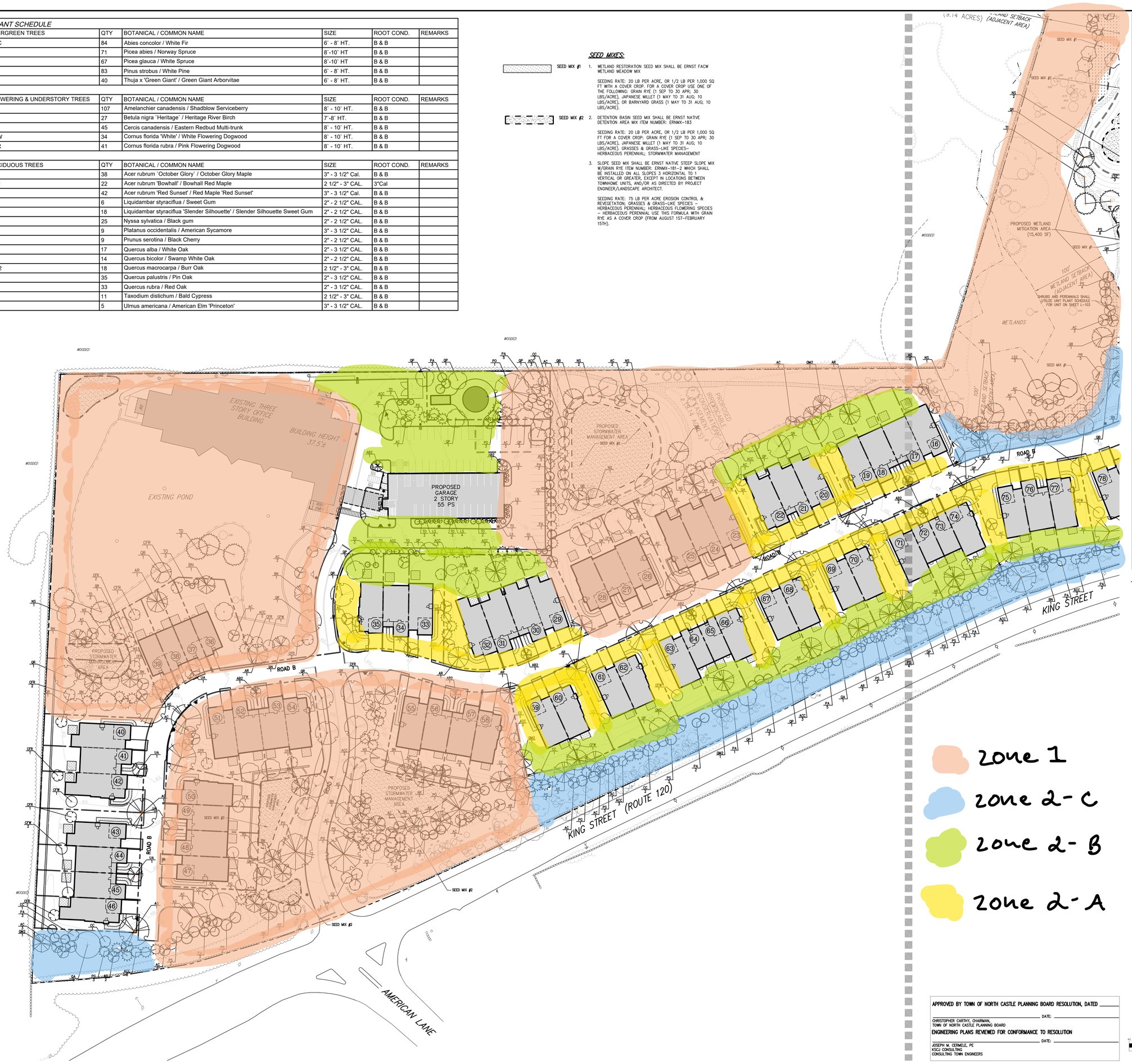

LEGEND

- EXISTING PROPERTY LINE
- ADJACENT PROPERTY LINE
- EXISTING SETBACK LINE
- EXISTING WETLAND LINE AND DELINEATION
- EXISTING BUILDING OVERHANG
- EXISTING BUILDING LINE
- EXISTING PAVEMENT EDGE
- EXISTING CURB LINE
- EXISTING STONE WALL
- EXISTING RETAINING WALL
- EXISTING GUIDE RAIL
- EXISTING FENCE
- EXISTING TREE AND DESIGNATION
- EXISTING TREE LINE
- EXISTING DIRECTIONAL ARROWS
- EXISTING PAINT
- EXISTING UTILITY POLE
- EXISTING LIGHT POLE
- EXISTING SIGN
- EXISTING FEATURE TO BE REMOVED
- PROPOSED BUILDING LINE
- PROPOSED CONCRETE CURB
- PROPOSED SAWCUT LINE
- PROPOSED CONCRETE SIDEWALK
- PROPOSED MONOLITHIC CONCRETE SIDEWALK & CURB
- PROPOSED DROP CURB AND RAMP
- PROPOSED HEAVY DUTY PAVEMENT
- PROPOSED PERVIOUS PAVEMENT
- PROPOSED CONCRETE APRON
- PROPOSED MULCH TRAIL
- PROPOSED RETAINING WALL (DESIGN BY OTHERS)
- PROPOSED FENCE
- PROPOSED DOUBLE ARM LIGHTING STANDARD (DESIGN BY OTHERS)
- PROPOSED SINGLE ARM LIGHTING STANDARD (DESIGN BY OTHERS)
- 2-4" WIDE YELLOW LINES 8"O.C.
- 12" WIDE WHITE STOP LINE
- TRAFFIC SIGN LOCATION & DESIGNATION
- PROPOSED SHADE TREE
- PROPOSED FLOWERING TREE
- PROPOSED CONIFEROUS TREE
- PROPOSED SHRUBS

NOTES:

1. ALL PLANT MATERIAL SHALL BE FIRST QUALITY STOCK. PLANTED MATERIAL AND METHODS OF INSTALLATION SHALL CONFORM TO THE AMERICAN NURSERY AND LANDSCAPE ASSOCIATION, AMERICAN STANDARD FOR NURSERY STOCK, LATEST EDITION.
2. ALL AREAS OF THE SITE NOT OCCUPIED BY BUILDING OR PAVEMENT AND NOT SPECIFIED AS BEING PLANTED WITH TREES, SHRUBS OR GROUND COVER SHALL BE LAWN.
3. ALL PLANTING BEDS SHALL BE MULCHED WITH 3" OF BROWN MULCH. MULCH SHALL BE CLEAN, NON-DYED, TOXIC FREE, SHREDDED HARDWOOD.
4. PLANT MATERIALS AS SPECIFIED ON THE DRAWINGS AND DELIVERED TO THE SITE SHALL BE NURSERY GROWN AND CERTIFIED TRUE TO THEIR GENUS, SPECIES AND VARIETY. SUBSTITUTIONS ARE NOT PERMITTED WITHOUT THE PROJECT LANDSCAPE ARCHITECTS WRITTEN APPROVAL.
5. ALL LANDSCAPING SHALL CONTINUE TO BE MAINTAINED IN A HEALTHY GROWING CONDITION THROUGHOUT THE DURATION OF THE PROJECT. ANY PLANTING NOT SO MAINTAINED SHALL BE REPLACED WITH NEW PLANTS AT THE BEGINNING OF THE NEXT, IMMEDIATELY FOLLOWING, GROWING SEASON.
6. ALL TREES AND SHRUBS SHALL BE PRUNED AND SHAPED AND BE SUBJECT TO THE APPROVAL OF THE PROJECT LANDSCAPE ARCHITECT AND GOVERNMENTAL AUTHORITIES HAVING JURISDICTION.
7. PLANTING STOCK SHALL BE WELL-BRANCHED AND WELL-FORMED, SOUND, VIGOROUS, HEALTHY, FREE FROM DISEASE, SUN-SCALE, WINDBURN, ABRASION, AND HARMFUL INSECTS OR INSECTS EGGS; AND SHALL HAVE HEALTHY, NORMAL UNBROKEN ROOT SYSTEMS. DECIDUOUS TREES AND SHRUBS SHALL BE SYMMETRICALLY DEVELOPED, OF UNIFORM HABIT OF GROWTH, WITH STRAIGHT TRUNKS OR STEMS, AND FREE FROM OBJECTIONABLE DISFIGUREMENTS. EVERGREEN TREES AND SHRUBS SHALL HAVE WELL-DEVELOPED SYMMETRICAL TOPS WITH TYPICAL SPREAD OF BRANCHES FOR EACH PARTICULAR SPECIES OR VARIETY. ONLY VINES AND GROUND COVER PLANTS WELL ESTABLISHED IN REMOVAL CONTAINERS, INTEGRAL CONTAINERS, OR FORMED HOMOGENEOUS SOIL SECTIONS SHALL BE USED. PLANTS SHALL BE GROWN UNDER CLIMATIC CONDITIONS SIMILAR TO THOSE IN THE LOCALITY OF THE PROJECT.
8. ALL STOCK SHALL BE BALLED AND BURLAPPED OR CONTAINER GROWN STOCK, UNLESS OTHERWISE SPECIFIED. BAREROOT STOCK OF ANY KIND IS UNACCEPTABLE UNLESS SPECIFIED.
9. ALL PLANTING BEDS, LAWNS AND LANDSCAPED AREAS SHALL RECEIVE A MINIMUM 4" THICK LAYER OF TOPSOIL, UNLESS OTHERWISE SPECIFIED

APPROVED BY TOWN OF NORTH CASTLE PLANNING BOARD RESOLUTION, DATED _____

_____ DATE: _____
CHRISTOPHER CARTHY, CHAIRMAN,
TOWN OF NORTH CASTLE PLANNING BOARD

ENGINEERING PLANS REVIEWED FOR CONFORMANCE TO RESOLUTION

_____ DATE: _____
JOSEPH M. CERMELE, PE
KSCJ CONSULTING
CONSULTING TOWN ENGINEERS

GRAPHIC SCALE
40 0 20 40 80 160
(IN FEET)
1 inch = 40 ft.

No.	Revision	Date	By
1.	REVISED FEIS	01/20/2023	BMS
2.	PLANNING BOARD SUBMISSION	10/06/2023	BMS

Previous Editions Obsolete

APPLICANT/OWNER:

AIRPORT CAMPUS I-V LLC
113 KING STREET / 4 WESTCHESTER AVENUE
POUND RIDGE, NY 10576

JMC Planning, Engineering, Landscape Architecture & Land Surveying, PLLC
JMC Site Development Consultants, LLC
John Meyer Consulting, Inc.
120 BEDFORD ROAD • ARMONK, NY 10504
voice 914.273.5225 • fax 914.273.2102
www.jmcpllc.com

LANDSCAPE PLAN

AIRPORT CAMPUS
113 KING STREET (NY ROUTE 120)
NORTH CASTLE, NY 10504

ANY ALTERATION OF PLANS, SPECIFICATIONS, PLATS AND REPORTS BEARING THE SEAL OF A LICENSED PROFESSIONAL ENGINEER OR LICENSED LAND SURVEYOR IS A VIOLATION OF SECTION 7209 OF THE NEW YORK STATE EDUCATION LAW, EXCEPT AS PROVIDED FOR BY SECTION 7209, SUBSECTION 2.

Drawn:	JJ
Approved:	AG
Scale:	1" = 40'
Date:	09/21/2022
Project No:	15072
15072-LAND	L-101 LAND.scr
Drawing No:	L-101

COPYRIGHT © 2023 by JMC All Rights Reserved. No part of this document may be reproduced, stored in a retrieval system, or transmitted, in any form or by means, electronic, mechanical, photocopying, recording or otherwise, without the prior written permission of JMC PLANNING, ENGINEERING, LANDSCAPE ARCHITECTURE & LAND SURVEYING, PLLC | JMC SITE DEVELOPMENT CONSULTANTS, LLC | JOHN MEYER CONSULTING, INC. (JMC). Any modifications or alterations to this document without the written permission of JMC shall render them invalid and unusable.

NOT FOR CONSTRUCTION

NOTES:

1. ALL PLANT MATERIAL SHALL BE FIRST QUALITY STOCK. PLANTED MATERIAL AND METHODS OF INSTALLATION SHALL CONFORM TO THE AMERICAN NURSERY AND LANDSCAPE ASSOCIATION, AMERICAN STANDARD FOR NURSERY STOCK, LATEST EDITION.
2. ALL AREAS OF THE SITE NOT OCCUPIED BY BUILDING OR PAVEMENT AND NOT SPECIFIED AS BEING PLANTED WITH TREES, SHRUBS OR GROUND COVER SHALL BE LAWN.
3. ALL PLANTING BEDS SHALL BE MULCHED WITH 3" OF BROWN MULCH. MULCH SHALL BE CLEAN, NON-DYED, TOXIC FREE, SHREDDED HARDWOOD.
4. PLANT MATERIALS AS SPECIFIED ON THE DRAWINGS AND DELIVERED TO THE SITE SHALL BE NURSERY GROWN AND CERTIFIED TRUE TO THEIR GENUS, SPECIES AND VARIETY. SUBSTITUTIONS ARE NOT PERMITTED WITHOUT THE PROJECT LANDSCAPE ARCHITECTS WRITTEN APPROVAL.
5. ALL LANDSCAPING SHALL CONTINUE TO BE MAINTAINED IN A HEALTHY GROWING CONDITION THROUGHOUT THE DURATION OF THE PROJECT. ANY PLANTING NOT SO MAINTAINED SHALL BE REPLACED WITH NEW PLANTS AT THE BEGINNING OF THE NEXT, IMMEDIATELY FOLLOWING, GROWING SEASON.
6. ALL TREES AND SHRUBS SHALL BE PRUNED AND SHAPED AND BE SUBJECT TO THE APPROVAL OF THE PROJECT LANDSCAPE ARCHITECT AND GOVERNMENTAL AUTHORITIES HAVING JURISDICTION.
7. PLANTING STOCK SHALL BE WELL-BRANCHED AND WELL-FORMED, SOUND, VIGOROUS, HEALTHY, FREE FROM DISEASE, SUN-SCALE, WINDBURN, ABRASION, AND HARMFUL INSECTS OR INSECTS EGGS; AND SHALL HAVE HEALTHY, NORMAL UNBROKEN ROOT SYSTEMS. DECIDUOUS TREES AND SHRUBS SHALL BE SYMMETRICALLY DEVELOPED, OF UNIFORM HABIT OF GROWTH, WITH STRAIGHT TRUNKS OR STEMS, AND FREE FROM OBJECTIONABLE DISFIGUREMENTS. EVERGREEN TREES AND SHRUBS SHALL HAVE WELL-DEVELOPED SYMMETRICAL TOPS WITH TYPICAL SPREAD OF BRANCHES FOR EACH PARTICULAR SPECIES OR VARIETY. ONLY VINES AND GROUND COVER PLANTS WELL ESTABLISHED IN REMOVAL CONTAINERS, INTEGRAL CONTAINERS, OR FORMED HOMOGENEOUS SOIL SECTIONS SHALL BE USED. PLANTS SHALL BE GROWN UNDER CLIMATIC CONDITIONS SIMILAR TO THOSE IN THE LOCALITY OF THE PROJECT.
8. ALL STOCK SHALL BE BALLED AND BURLAPPED OR CONTAINER GROWN STOCK, UNLESS OTHERWISE SPECIFIED. BAREROOT STOCK OF ANY KIND IS UNACCEPTABLE UNLESS SPECIFIED.
9. ALL PLANTING BEDS, LAWNS AND LANDSCAPED AREAS SHALL RECEIVE A MINIMUM 4" THICK LAYER OF TOPSOIL, UNLESS OTHERWISE SPECIFIED

LEGEND

- EXISTING PROPERTY LINE
- ADJACENT PROPERTY LINE
- EXISTING SETBACK LINE
- WLF-63 WLF-64 WLF-65 EXISTING WETLAND LINE AND DELINEATION
- EXISTING BUILDING OVERHANG
- EXISTING BUILDING LINE
- EXISTING PAVEMENT EDGE
- EXISTING CURB LINE
- EXISTING STONE WALL
- EXISTING RETAINING WALL
- EXISTING GUIDE RAIL
- EXISTING FENCE
- T10 M EXISTING TREE AND DESIGNATION
- EXISTING TREE LINE
- EXISTING DIRECTIONAL ARROWS
- EXISTING PAINT
- EXISTING UTILITY POLE
- EXISTING LIGHT POLE
- EXISTING SIGN
- EXISTING FEATURE TO BE REMOVED
- PROPOSED BUILDING LINE
- PROPOSED CONCRETE CURB
- PROPOSED SAWCUT LINE
- PROPOSED CONCRETE SIDEWALK
- PROPOSED MONOLITHIC CONCRETE SIDEWALK & CURB
- PROPOSED DROP CURB AND RAMP
- PROPOSED HEAVY DUTY PAVEMENT
- PROPOSED PERVIOUS PAVEMENT
- PROPOSED CONCRETE APRON
- PROPOSED MULCH TRAIL
- PROPOSED RETAINING WALL (DESIGN BY OTHERS)
- PROPOSED FENCE
- PROPOSED DOUBLE ARM LIGHTING STANDARD (DESIGN BY OTHERS)
- PROPOSED SINGLE ARM LIGHTING STANDARD (DESIGN BY OTHERS)
- 2-4" WIDE YELLOW LINES 8"O.C.
- 12" WIDE WHITE STOP LINE
- TRAFFIC SIGN LOCATION & DESIGNATION
- PROPOSED SHADE TREE
- PROPOSED FLOWERING TREE
- PROPOSED CONIFEROUS TREE
- PROPOSED SHRUBS

SEED MIXES:

SEED MIX #1

1. WETLAND RESTORATION SEED MIX SHALL BE ERNST FACW WETLAND MEADOW MIX

   SEEDING RATE: 20 LB PER ACRE, OR 1/2 LB PER 1,000 SQ FT WITH A COVER CROP. FOR A COVER CROP USE ONE OF THE FOLLOWING: GRAIN RYE (1 SEP TO 30 APR; 30 LBS/ACRE), JAPANESE MILLET (1 MAY TO 31 AUG; 10 LBS/ACRE), OR BARNYARD GRASS (1 MAY TO 31 AUG; 10 LBS/ACRE).

SEED MIX #2

2. DETENTION BASIN SEED MIX SHALL BE ERNST NATIVE DETENTION AREA MIX ITEM NUMBER: ERNMX-183

   SEEDING RATE: 20 LB PER ACRE, OR 1/2 LB PER 1,000 SQ FT FOR A COVER CROP: GRAIN RYE (1 SEP TO 30 APR; 30 LBS/ACRE), JAPANESE MILLET (1 MAY TO 31 AUG; 10 LBS/ACRE). GRASSES & GRASS-LIKE SPECIES-HERBACEOUS PERENNIAL; STORMWATER MANAGEMENT

3. SLOPE SEED MIX SHALL BE ERNST NATIVE STEEP SLOPE MIX W/GRAIN RYE ITEM NUMBER: ERNMX-181-2 WHICH SHALL BE INSTALLED ON ALL SLOPES 3 HORIZONTAL TO 1 VERTICAL OR GREATER, EXCEPT IN LOCATIONS BETWEEN TOWNHOME UNITS, AND/OR AS DIRECTED BY PROJECT ENGINEER/LANDSCAPE ARCHITECT.

   SEEDING RATE: 75 LB PER ACRE EROSION CONTROL & REVEGETATION; GRASSES & GRASS-LIKE SPECIES – HERBACEOUS PERENNIAL; HERBACEOUS FLOWERING SPECIES – HERBACEOUS PERENNIAL USE THIS FORMULA WITH GRAIN RYE AS A COVER CROP (FROM AUGUST 1ST-FEBRUARY 15TH).

APPROVED BY TOWN OF NORTH CASTLE PLANNING BOARD RESOLUTION, DATED ________

________ DATE: ________
CHRISTOPHER CARTHY, CHAIRMAN,
TOWN OF NORTH CASTLE PLANNING BOARD

ENGINEERING PLANS REVIEWED FOR CONFORMANCE TO RESOLUTION

________ DATE: ________
JOSEPH M. CERMELE, PE
KSCJ CONSULTING
CONSULTING TOWN ENGINEERS

PLANT SCHEDULE

EVERGREEN TREES	QTY	BOTANICAL / COMMON NAME	SIZE	ROOT COND.	REMARKS
ACC	84	Abies concolor / White Fir	6` - 8` HT.	B & B	
PA	71	Picea abies / Norway Spruce	8`-10` HT	B & B	
PG	67	Picea glauca / White Spruce	8`-10` HT	B & B	
PS	83	Pinus strobus / White Pine	6` - 8` HT.	B & B	
TO	40	Thuja x 'Green Giant' / Green Giant Arborvitae	6` - 8` HT.	B & B	
FLOWERING & UNDERSTORY TREES	QTY	BOTANICAL / COMMON NAME	SIZE	ROOT COND.	REMARKS
AC	107	Amelanchier canadensis / Shadblow Serviceberry	8` - 10` HT.	B & B	
BN	27	Betula nigra `Heritage` / Heritage River Birch	7`-8` HT.	B & B	
CC	45	Cercis canadensis / Eastern Redbud Multi-trunk	8` - 10` HT.	B & B	
CFW	34	Cornus florida 'White' / White Flowering Dogwood	8` - 10` HT.	B & B	
CFR	41	Cornus florida rubra / Pink Flowering Dogwood	8` - 10` HT.	B & B	
DECIDUOUS TREES	QTY	BOTANICAL / COMMON NAME	SIZE	ROOT COND.	REMARKS
AG	38	Acer rubrum `October Glory` / October Glory Maple	3" - 3 1/2" Cal.	B & B	
AB2	22	Acer rubrum 'Bowhall' / Bowhall Red Maple	2 1/2" - 3" CAL.	3"Cal	
AR	42	Acer rubrum 'Red Sunset' / Red Maple 'Red Sunset'	3" - 3 1/2" Cal.	B & B	
LS2	6	Liquidambar styraciflua / Sweet Gum	2" - 2 1/2" CAL.	B & B	
LS	18	Liquidambar styraciflua 'Slender Silhouette' / Slender Silhouette Sweet Gum	2" - 2 1/2" CAL.	B & B	
NS	25	Nyssa sylvatica / Black gum	2" - 2 1/2" CAL.	B & B	
PO	9	Platanus occidentalis / American Sycamore	3" - 3 1/2" CAL.	B & B	
PR	9	Prunus serotina / Black Cherry	2" - 2 1/2" CAL.	B & B	
QA	17	Quercus alba / White Oak	2" - 3 1/2" CAL.	B & B	
QB	14	Quercus bicolor / Swamp White Oak	2" - 2 1/2" CAL.	B & B	
QM2	18	Quercus macrocarpa / Burr Oak	2 1/2" - 3" CAL.	B & B	
QP	35	Quercus palustris / Pin Oak	2" - 3 1/2" CAL.	B & B	
QR	33	Quercus rubra / Red Oak	2" - 3 1/2" CAL.	B & B	
TD	11	Taxodium distichum / Bald Cypress	2 1/2" - 3" CAL.	B & B	
UA	5	Ulmus americana / American Elm 'Princeton'	3" - 3 1/2" CAL.	B & B	

No.	Revision	Date	By
1.	REVISED FEIS	01/20/2023	BMS
2.	PLANNING BOARD SUBMISSION	10/06/2023	BMS

Previous Editions Obsolete

APPLICANT/OWNER:
AIRPORT CAMPUS I-V LLC
46 WESTCHESTER AVENUE
POUND RIDGE, NY 10576

JMC Planning, Engineering, Landscape Architecture & Land Surveying, PLLC
JMC Site Development Consultants, LLC
John Meyer Consulting, Inc.
120 BEDFORD ROAD • ARMONK, NY 10504
voice 914.273.5225 • fax 914.273.2102
www.jmcpllc.com

JMC

LANDSCAPE PLAN

AIRPORT CAMPUS
113 KING STREET (NY ROUTE 120)
NORTH CASTLE, NY 10504

ANY ALTERATION OF PLANS, SPECIFICATIONS, PLATS AND REPORTS BEARING THE SEAL OF A LICENSED PROFESSIONAL ENGINEER OR LICENSED LAND SURVEYOR IS A VIOLATION OF SECTION 7209 OF THE NEW YORK STATE EDUCATION LAW, EXCEPT AS PROVIDED FOR BY SECTION 7209, SUBSECTION 2.

Drawn: JJ Approved: AG
Scale: 1" = 40'
Date: 09/21/2022
Project No: 15072
15072-LAND L-102 LAND.scr
Drawing No:
L-102

COPYRIGHT © 2022 by JMC All Rights Reserved. No part of this document may be reproduced, stored in a retrieval system, or transmitted in any form or by means, electronic, mechanical, photocopying, recording or otherwise, without the prior written permission of JMC PLANNING, ENGINEERING, LANDSCAPE ARCHITECTURE & LAND SURVEYING, PLLC | JMC SITE DEVELOPMENT CONSULTANTS, LLC | JOHN MEYER CONSULTING, INC. (JMC). Any modifications or alterations to this document without the written permission of JMC shall render them invalid and unusable.

NOT FOR CONSTRUCTION

B. LAING ASSOCIATES
A Woman-owned Business Enterprise
ENVIRONMENTAL CONSULTING
www.blaingassociates.com
103 Fort Salonga Road - Suite 5 Fort Salonga, NY 11768
(631) 261-7170, Fax: (631) 261-7454

December 19, 2023

Mr. Kevney Moses
Land Entitlement Manager, NY Metro
Toll Brothers
42 Old Ridgebury Rd.
Danbury, CT 06810

Sent via: kmoses@tollbrothers.com

Re: 113 King Street, Armonk, Town of North Castle, Westchester County, New York
Qualitative Noise Evaluation and Standards for Residential Site Development

Mr. Moses,

B. Laing Associates, Inc. is an environmental consulting firm providing generalized noise evaluation, guidelines, and standards for the proposed redevelopment of 113 Kings Street, located within Armonk, New York. The former MBIA property is approximately 38.8 acres and is less than a mile north of the Westchester County Airport. This analysis specifically relates to existing aircraft sound levels[1] and noise attenuation as a result of building materials. This evaluation utilizes FAA methodologies and monitoring data available from the station on Cooney Hill immediately adjacent to the project location.

Project Description

According to the October 5, 2023, Planning Board application correspondence prepared by Cuddy and Feder, LLP, Toll Brothers proposes the construction of 125 attached townhomes on the 34.4 acres zoned R-MF-A and Airport Campus will adaptively reuse the existing southern office building and convert it into an age-restricted, multi-family building with a new parking structure on the 4.4 acres zoned R-MF-SCH. Both projects incorporate recreational facilities including a community clubhouse and pool, in-building amenities, walking tails and other features. Ten percent of the units in each community will be affordable pursuant to the Town's Affirmatively Furthering Fair Housing (AFFH) requirements. As a part of this Project, the remaining buildings and structures on the Site will be demolished.

Background

Sound is created when changes of pressure (waves) are produced in the air. These pressure changes are created at many frequencies (i.e., spacing of the waves). Sound is received and perceived when the human ear reacts to these pressure changes. The pressure changes are expressed as decibels (dB) depending upon the power of the source as expressed in watts of power (with a reference of 1 picowatt or 10-12 watts).

[1] Westchester County Airport Monitor September 2023 via westchestergov.com.

Frequency varies depending upon the rate at which sound pressures fluctuate in a cycle over time. This is measured in hertz (Hz) with one Hz equaling 1 cycle per second. The frequency of the wave (in Hz) determines the perceived pitch of the sound. The average person's ear can detect sounds ranging from 20 to more than 10,000 hertz (Hz). Each frequency is detectable at different pressure levels and so, the system for sound measurement which mimics the human ear is an A-weighted decibel system or dB(A). The human ear can barely detect a 3 dB(A) change in sound levels. A 6 dB(A) increase results in a generally audible change. A 10 dB(A) change in sound levels is approximately a doubling of sound wave pressure. As a point of reference, human conversations at a distance of two to three feet occurs at a sound pressure level (SPL) of 60 dB(A) with a calm voice to 75 dB(A) with a raised voice (USEPA's Community Noise, 1971).

Local Sound Monitoring

The Westchester County Airport monitors and collects sound levels/data from 22 locations (18 in New York and 4 in Connecticut) in the vicinity of the airport as its Airport Noise and Operations Monitoring System (ANOMS). Monitoring takes place 24 hours a day, 365 days a year. In addition to the fixed, sophisticated equipment, the airport also has two portable meters. Measuring instruments for environmental noise purposes must be type 1/class 1 or type 2/class 2 precision or general-purpose sound level meters. Monthly data is provided to the public via westchestergov.com in Airport Monitor Monthly Reports. The data is provided in both L_{eq} and L_{DN}. The text "Environmental Noise Measurement" by Bruel & Kjaer (a standard, classical reference for environmental sound measurement equipment and analysis) states that the L_{eq} is the metric used in many American community noise standards. It is a value referred to as the equivalent sound level. The "Handbook of Acoustical Measurements and Noise Control" by Harris, C. M., et al. (another standard, classical reference for environmental sound measurement equipment and analysis) states in Chapter 50 that the L_{eq} (or the equivalent L_{dn} -day night averages) is the metric used by US Federal Agencies and many states for use in community noise analyses. The L_{dn} is the average equivalent sound level over a 24-hour period, with a 10 dB penalty added for noise during the nighttime hours of 10:00 PM to 07:00 AM. The Federal Aviation Administration (FAA) utilizes the day-night average sound level (DNL also expressed as L_{dn}) noise metric to put a value on a person's collective exposure to sound over a 24-hour period. Monthly data is divided into aircraft, community, and total noise for each value for a total of 6 values.

The closest monitoring station to the project location is Noise Monitoring Terminal (RMT) 1. It is located on Cooney Hill Road; immediately adjacent to the Project site. This station documents that the Project is not within the Westchester County Airport Master Plan Update Chapter 2 Figure 2-18 Average Annual Day Noise Contours as it was previously in the Comparison of 1988, 1999 and 2005 DNL Contours.[2] As a result and as documented in the FEIS, there are no restrictions on residential development at the Project site.

[2] Project site also not within the Westchester County Airport Master Plan Update Average Annual Day Noise Contours.

County published data for the month of September 2023 from the most recent available ANOMS are provide below for RMT 1.

END OF MONTH
For September 2023

RMT	1
LDNC	60.3
LDNA	58.8
LDNT	62.7
LEQC	54.5
LEQA	55.7
LEQT	58.2

C – Community Noise
A – Aircraft Noise
T – Total Noise

This data confirms the FEIS information regarding aircraft noise at the Project site.

Analysis:

The recorded noise levels described above assume that the receptors are people outside. A building or house will provide significant attenuation for those who are indoors. Sound levels can be expected to be 27 dB(A) lower indoors with the windows closed. Even in homes with the windows open, indoor sound levels can be reduced by up to 17 dB(A) (USEPA 1978).

To determine the potential for site specific impact on the proposed residential development from existing aircraft noise associated with the Westchester County Airport, numerous resources were referred to and are referenced below. Utilizing the information from each resource, the Project was evaluated utilizing County Airport measurements. A list of some of the major resources are as follows:

1. Federal Aviation Administration Noise Abatement Policy and 14 CFR Part 150 Airport Noise Compatibility Planning[3]
2. NYSDEC Assessing and Mitigation Noise Impacts (revised February 2, 2001).
3. U.S. EPA
4. NYC City Environmental Quality Review (CEQR) 2021 Technical Manual Chapter 19 Noise.
5. U.S. Department of Housing and Urban Development Chapter 4 Noise Attenuation and Chapter 5 Noise Assessment Guidelines

According to U.S. Department of Housing and Urban Development, Chapter 4, the Standard Transmission Class (STC - blocking of sound transmission) of a 2x4 wall with exterior siding and sheathing and interior sheet rock may be 37 dB. Further, a common stud wall alone has a STC of 35 dB. A standard tilt-wash double hung full frame window by Anderson carries an STC rating of 29 dB.[4] STC is the most common sound reduction measurement currently in use and has been adopted by many cities and states as code standards. At the values listed above, building materials will sufficiently attenuate sound levels to mitigate potential impacts from an external sound environmental in the 60-70 decibel range.

[3] Voluntary program that Westchester County Airport does not participate in.
[4] Decibel attenuation can slightly vary due to differing frequency levels of sound levels.

Using the $L_{DN}T$ value, 62.7 dBA, in the September 2023 recorded data, a reduction of 17.7 decibels with open windows would be required to obtain an interior level of 45 dBA. With the proposed Anderson windows, when closed, the STC would be 29 decibels for an interior level of 33.7 dB(A). Utilizing the resource information above, indoor levels of 45 dBA can be readily achieved. As some portions of the Project area are approximately 1,250 feet closer to the airport then RMT 1, we would expect that there would potentially be an increase of decibel level results of approximately 2 to 3 decibels according to the inverse square law. In this case, a 20.7 decibel reduction would be necessary to obtain 45 dBA within the residences. Again, utilizing the resource information above, indoor levels of 45 dBA can be readily achieved. With the proposed Anderson windows, when closed, the STC would be 29 decibels for an interior level of 36.7 dB(A). These levels of sound are considered very quiet/library/whisper setting per NYSDEC's 2001 guidance, "Assessing and Mitigating Noise Impacts."

It should be noted that the surrounding community noise was greater than aircraft noise in the September 2023 data for RMT 1. Per the New York Roadway Inventory, the Annual Average Daily Traffic (AADT) count in 2019 for New York State Route NY 120 was 8,028. Route 120 is an Urban Minor Arterial roadway. The NYSDOT describes FC-16 as:

> Interconnects with and augments the urban principal arterial system and provides service to trips of moderate length at somewhat lower of travel mobility than principal arterials. Ideally, they should not penetrate identifiable neighborhoods. The spacing of minor arterial streets should normally be not more than 1 mile in fully developed areas.

In 2019, trucks accounted for 3 percent of the volume. In 2021, B. Laing Associates, Inc. collected noise measurements along Purchase Street approximately 2 miles south of the project site with results that ranged from 67 to 70 dBA during the daily peak hours. Thus, the area is already impacted by the sound levels associated with traffic.

Utilizing the above references, plus additional minor sources, the likely extent of potential, interior noise impacts associated with aircraft activity were determined to be insignificant. Our analysis incorporates substantial conservative factors using both generalized data and County Airport RTM1 data adjacent to the stie. Based on the County Airport data which can be relied upon, further on-site measurements are not necessary and we would anticipate such data confirming this analysis.

Please contact the office with any questions you may have regarding this noise analysis. Thank you.

Sincerely,

Danna M. Cuneo
Principal Scientist

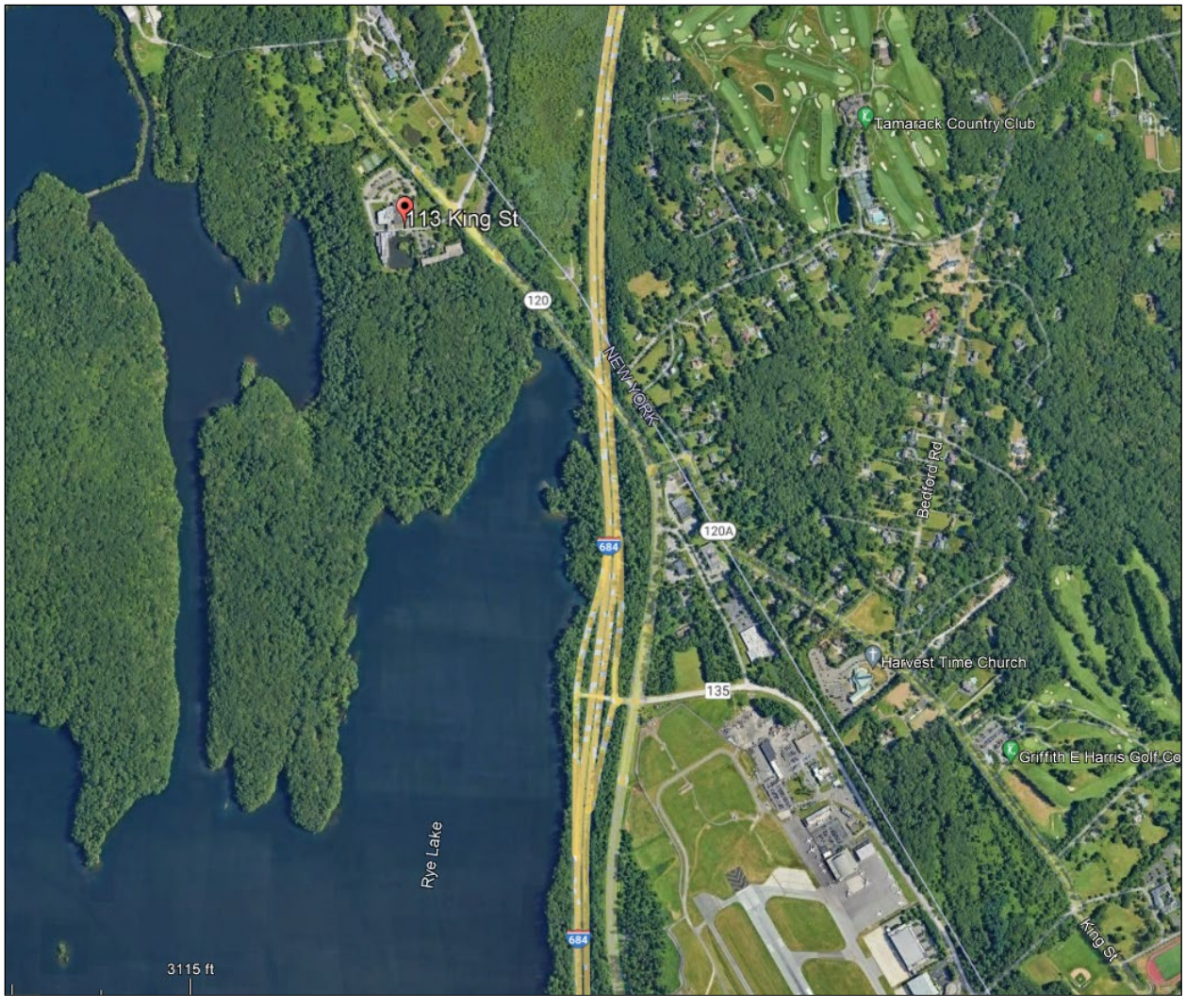

SITE LOCATION MAP

113 Kings Street, Armonk, Town of North Castle, Westchester County, New York

Source: Google Earth

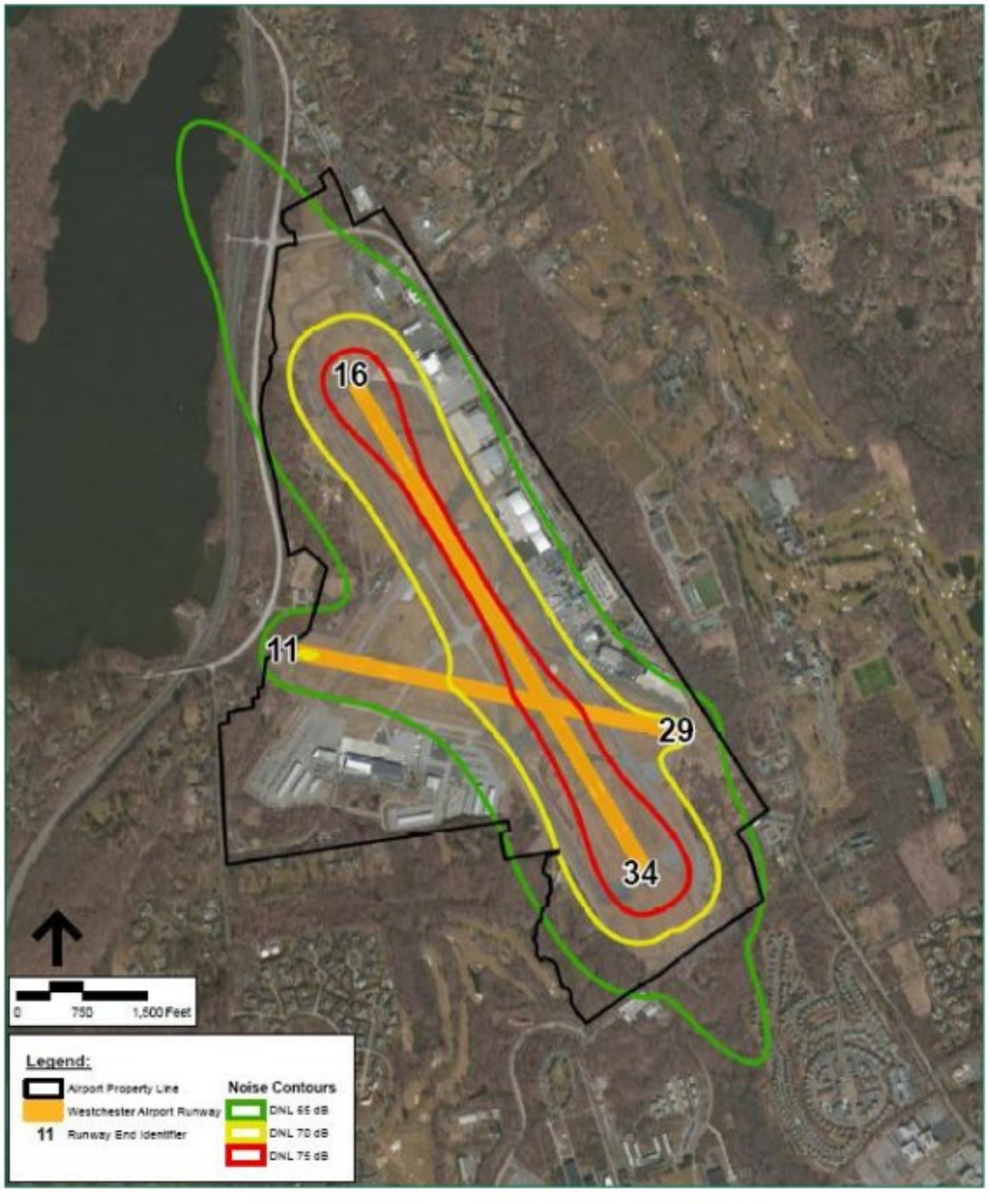

Figure 2-18: Average Annual Day Noise Contours

ATTACHMENT A

Qualifications

B. LAING ASSOCIATES
ENVIRONMENTAL CONSULTING
www.blaingassociates.com
103 Fort Salonga Road - Suite 5 Fort Salonga, NY 11768
(631) 261-7170, Fax: (631) 261-7454

B. Laing Associates, Inc. has been conducting monitoring for, and computer modeling of, sources of noise pollution and potential sound level impacts collectively for over 55 years utilizing field-based data and mathematical modeling via proprietary calculation methods. Computer modeling of mobile and point sources of noise is undertaken via TNM, Stamina and optima, plus sound dispersion modeling software such as SoundPLAN and NoiseTools. The firm has also provided noise analyses, monitoring, and mitigation plans for numerous outdoor sources for nonpoint sources for compliance with local and federal requirements. B. Laing Associates, Inc. has also conducted noise analyses for residential and commercial developments and municipal reviews pursuant to SEQR. We have conducted source modeling on projects ranging from several thousand to several million square feet of commercial and residential space including newly sited malls or offices and expanded commercial projects and renovations. We have also modeled point sources of sound level impacts, including temporary construction impacts. Such computer modeling and monitoring has included coal-fired facilities, gas-fired power plants, industrial plants, highway/intersection improvements, commercial interior/exterior, solar installations, wedding venues, and residential interior/exterior spaces. B. Laing personnel have monitored sound and air emissions for projects such as new or rehabilitated roadways and intersections, resource recovery plants, commercial retail and warehouse facilities, and hazardous waste sites.

A sample of our related projects are provided below:

B. Laing Associates, Inc. Sample Project List

Coxsackie, Greene County, New York. Noise analysis/study of proposed Mountain View Estates at Coxsackie development. Study included sound analysis of CSX railway and impacts to development. Provided analysis and modeling for Environmental Impact Statement (EIS).

Village of Woodbury, Orange County, New York. Conduct air and noise analysis for proposed Gardens at Harriman Station residential and commercial development. Study included sound analysis of Harriman Metro North train station and impacts to development. Provided analysis and modeling for Environmental Impact Statement (EIS).

Town of Goshen, Orange County, New York. Noise analysis and study for Foxfire La Colina. Provided the Town Planning Board with an analysis of ambient and operational sounds at an existing wedding venue. Noise abatement/mitigation practices were designed to allow for the continued use of the space while conforming to Town noise ordinances.

City of New York, Bronx County, New York. Provided analysis of existing noise conditions and ambient measurements for a proposed residential apartment building in the Bronx.

Mount Kisco, Westchester County, New York. Conducted sound analysis of ambient measurements for a proposed solar farm in Westchester County. Provided modeling of proposed sound increases due to traffic and/or operational sound levels for the project. Abatement and mitigation practices were designed where necessary.

Poughkeepsie, Dutchess County, New York. Noise analysis/study of the Bottini Waterfront Fuel Depot (a.k.a., New Hamburg Terminal Corp. and Morgan Fuel and Heating Co., Inc.) located on the Hudson River waterfront on Point Street, New Hamburg, Dutchess County, New York. Provide the Town of Poughkeepsie analysis of the Bottini Waterfront Fuel Depot and its operation as a commercial land use which is immediately adjacent to residential land uses.

Town of Dover, Dutchess County, New York. Noise analysis/study of proposed Knolls at Dover development. Study included analysis of Metro North trains at the Wingdale Station and impacts to development. Provided analysis and modeling for Environmental Impact Statement (EIS).

Village of Hempstead, Nassau County, New York. Noise study monitoring for the proposed Downtown Overlay Zones and Zoning Map Amendments. Sound monitoring at Long Island Railroad Hempstead Train Station.

Cortlandt, Westchester County, New York. Provide natural resource analysis for the Metro-North Railroad Cortlandt Rail Station parking expansion.

Town of Bedford, Westchester County, New York. Review Town of Bedford Town Code, Chapter 83 Noise. and Chapter 125 Zoning, Article IV Special Environmental Regulations, Section 32 Noise. Provide guidance on updating regulating sound pressure levels of landscaping equipment by controlling the time frames of usage.

Town of Bedford, Westchester County, New York. Provide sound analysis of car washes within the Town of Bedford. Review applicant's noise study and provide direction for the Town under Chapter 83 Noise and Chapter 125 Zoning, Article IV Special Environmental Regulations, Section 32 Noise.

superelevation rate in excess of 2.0 percent, superelevation should be applied in accordance with Tables 3-8 through 3-12.

3.3.6 Design for Low-Speed Streets in Urban Areas

On low-speed streets in urban areas where speed is relatively low and variable, typically in the urban and urban core contexts, the use of superelevation for horizontal curves can be minimized. Where side friction demand exceeds the assumed available side friction factor for the design speed, superelevation, within the range from the normal cross slope to maximum superelevation, is provided.

3.3.6.1 Side Friction Factors

Figure 3-4 shows the recommended side friction factors for low-speed streets and highways as a dashed line. These recommended side friction factors provide a reasonable margin of safety at low speeds and lead to somewhat lower superelevation rates as compared to the high-speed friction factors. The side friction factors vary with the design speed from 0.38 at 10 mph [0.40 at 15 km/h] to 0.15 at 45 mph [0.15 at 70 km/h]. A research report (*44*) confirms the appropriateness of these design values.

3.3.6.2 Superelevation

Although superelevation is beneficial for traffic operations, various factors often combine to make its use impractical on low-speed streets in urban areas. These factors include:

- wide pavement areas;
- the need to meet the grade of adjacent property;
- surface drainage considerations;
- the desire to maintain low-speed operation; and
- frequency of intersecting cross streets, alleys, and driveways.

Therefore, horizontal curves on low-speed streets in urban areas are frequently designed without superelevation, sustaining the lateral force solely with side friction. For traffic traveling along curves to the left, the normal cross slope is an adverse or negative superelevation, but with flat curves the resultant friction needed to sustain the lateral force, even given the negative superelevation, is small.

Where superelevation will be applied to low-speed streets in urban areas, Method 2 is recommended for the design of horizontal curves where, through conditioning, drivers have developed a higher threshold of discomfort. By this method, none of the lateral force is counteracted by superelevation so long as the side friction factor is less than the specified maximum assumed for design for the radius of the curve and the design speed. For sharper curves, f remains at the maximum and e is used in direct proportion to the continued increase in curvature until e reaches

Copyright American Association of State Highway and Transportation Officials
Provided by IHS Markit under license with AASHTO
No reproduction or networking permitted without license from IHS
© 2018 by the American Association of State Highway and Transportation Officials
All rights reserved. Duplication is a violation of applicable law.

e_{max}. The recommended design values for f that are applicable to low-speed streets and highways are shown as a dashed line in Figure 3-4. The radii for the full range of superelevation rates were calculated using Method 2 (i.e., the simplified curve equation) using f values from Figure 3-4 are tabulated in Table 3-13 and graphed in Figure 3-7.

The factors that often make superelevation impractical on low-speed streets in urban areas also make marginal superelevation improvements impractical when reconstructing low-speed streets. Therefore, low-speed streets in urban areas may retain their existing cross slope unless the curve has an unacceptable history of curve-related crashes. In such cases, consideration should be given to providing superelevation meeting Table 3-13 and, if practical, high-friction surface courses should also be provided.

Table 3-13. Minimum Radii and Superelevation for Low-Speed Streets in Urban Areas

U.S. Customary							
e (%)	V_d = 15 mph	V_d = 20 mph	V_d = 25 mph	V_d = 30 mph	V_d = 35 mph	V_d = 40 mph	V_d = 45 mph
	R (ft)	R (ft)	R (ft)	R (ft)	R (ft)	R (ft)	R (ft)
−6.0	58	127	245	429	681	1067	1500
−5.0	56	121	231	400	628	970	1350
−4.0	54	116	219	375	583	889	1227
−3.0	52	111	208	353	544	821	1125
−2.8	51	110	206	349	537	808	1107
−2.6	51	109	204	345	530	796	1089
−2.4	51	108	202	341	524	784	1071
−2.2	50	108	200	337	517	773	1055
−2.0	50	107	198	333	510	762	1039
−1.5	49	105	194	324	495	736	1000
0	47	99	181	300	454	667	900
1.5	45	94	170	279	419	610	818
2.0	44	92	167	273	408	593	794
2.2	44	91	165	270	404	586	785
2.4	44	91	164	268	400	580	776
2.6	43	90	163	265	396	573	767
2.8	43	89	161	263	393	567	758
3.0	43	89	160	261	389	561	750
3.2	43	88	159	259	385	556	742
3.4	42	88	158	256	382	550	734
3.6	42	87	157	254	378	544	726
3.8	42	87	155	252	375	539	718
4.0	42	86	154	250	371	533	711
4.2	41	85	153	248	368	528	703
4.4	41	85	152	246	365	523	696
4.6	41	84	151	244	361	518	689
4.8	41	84	150	242	358	513	682
5.0	41	83	149	240	355	508	675
5.2	40	83	148	238	352	503	668

Copyright American Association of State Highway and Transportation Officials
Provided by IHS Markit under license with AASHTO
No reproduction or networking permitted without license from IHS
© 2018 by the American Association of State Highway and Transportation Officials
All rights reserved. Duplication is a violation of applicable law.

Table 3-13. Minimum Radii and Superelevation for Low-Speed Streets in Urban Areas (Continued)

U.S. Customary							
e (%)	V_d = 15 mph	V_d = 20 mph	V_d = 25 mph	V_d = 30 mph	V_d = 35 mph	V_d = 40 mph	V_d = 45 mph
	R (ft)	R (ft)	R (ft)	R (ft)	R (ft)	R (ft)	R (ft)
5.4	40	82	147	236	349	498	662
5.6	40	82	146	234	346	494	655
5.8	40	81	145	233	343	489	649
6.0	39	81	144	231	340	485	643
6.2	39	80	143	229	337	480	637
6.4	39	80	142	227	335	476	631
6.6	39	79	141	226	332	472	625
6.8	39	79	140	224	329	468	619
7.0	38	78	139	222	327	464	614
7.2	38	78	138	221	324	460	608
7.4	38	78	137	219	322	456	603
7.6	38	77	136	217	319	452	597
7.8	38	77	135	216	317	448	592
8.0	38	76	134	214	314	444	587
8.2	37	76	134	213	312	441	582
8.4	37	75	133	211	309	437	577
8.6	37	75	132	210	307	434	572
8.8	37	74	131	208	305	430	567
9.0	37	74	130	207	302	427	563
9.2	36	74	129	205	300	423	558
9.4	36	73	129	204	298	420	553
9.6	36	73	128	203	296	417	549
9.8	36	72	127	201	294	413	544
10.0	36	72	126	200	292	410	540
10.2	36	72	126	199	290	407	536
10.4	35	71	125	197	288	404	531
10.6	35	71	124	196	286	401	527
10.8	35	71	123	195	284	398	523
11.0	35	70	123	194	282	395	519
11.2	35	70	122	192	280	392	515
11.4	35	69	121	191	278	389	511
11.6	34	69	120	190	276	386	508
11.8	34	69	120	189	274	384	504
12.0	34	68	119	188	272	381	500

Notes:

1. Computed using Superelevation Distribution Method 2.
2. Superelevation may be optional on low-speed streets in urban areas.
3. Negative superelevation values beyond –2.0 percent should be used for unpaved surfaces such as gravel, crushed stone, and earth. However, a normal cross slope of –2.5 percent may be used on paved surfaces in areas with intense rainfall.

Copyright American Association of State Highway and Transportation Officials
Provided by IHS Markit under license with AASHTO
No reproduction or networking permitted without license from IHS
© 2018 by the American Association of State Highway and Transportation Officials
All rights reserved. Duplication is a violation of applicable law.

Table 3-13. Minimum Radii and Superelevation for Low-Speed Streets in Urban Areas (Continued)

Metric						
e (%)	V_d = 20 km/h	V_d = 30 km/h	V_d = 40 km/h	V_d = 50 km/h	V_d = 60 km/h	V_d = 70 km/h
	R (m)	R (m)	R (m)	R (m)	R (m)	R (m)
−6.0	11	32	74	151	258	429
−5.0	10	31	70	141	236	386
−4.0	10	30	66	131	218	351
−3.0	10	28	63	123	202	322
−2.8	10	28	62	122	200	316
−2.6	10	28	62	120	197	311
−2.4	10	28	61	119	194	306
−2.2	10	27	61	117	192	301
−2.0	10	27	60	116	189	297
−1.5	9	27	59	113	183	286
0	9	25	55	104	167	257
1.5	9	24	51	96	153	234
2.0	9	24	50	94	149	227
2.2	8	23	50	93	148	224
2.4	8	23	50	92	146	222
2.6	8	23	49	91	145	219
2.8	8	23	49	90	143	217
3.0	8	23	48	89	142	214
3.2	8	23	48	89	140	212
3.4	8	23	48	88	139	210
3.6	8	22	47	87	138	207
3.8	8	22	47	86	136	205
4.0	8	22	47	86	135	203
4.2	8	22	46	85	134	201
4.4	8	22	46	84	132	199
4.6	8	22	46	83	131	197
4.8	8	22	45	83	130	195
5.0	8	21	45	82	129	193
5.2	8	21	45	81	128	191
5.4	8	21	44	81	127	189
5.6	8	21	44	80	125	187
5.8	8	21	44	79	124	185
6.0	8	21	43	79	123	184
6.2	8	21	43	78	122	182
6.4	8	21	43	78	121	180
6.6	8	20	43	77	120	179

Copyright American Association of State Highway and Transportation Officials
Provided by IHS Markit under license with AASHTO
No reproduction or networking permitted without license from IHS
© 2018 by the American Association of State Highway and Transportation Officials
All rights reserved. Duplication is a violation of applicable law.

Table 3-13. Minimum Radii and Superelevation for Low-Speed Streets in Urban Areas (Continued)

Metric						
e (%)	V_d = 20 km/h	V_d = 30 km/h	V_d = 40 km/h	V_d = 50 km/h	V_d = 60 km/h	V_d = 70 km/h
	R (m)	R (m)	R (m)	R (m)	R (m)	R (m)
6.8	8	20	42	76	119	177
7.0	7	20	42	76	118	175
7.2	7	20	42	75	117	174
7.4	7	20	41	75	116	172
7.6	7	20	41	74	115	171
7.8	7	20	41	73	114	169
8.0	7	20	41	73	113	168
8.2	7	20	40	72	112	166
8.4	7	19	40	72	112	165
8.6	7	19	40	71	111	163
8.8	7	19	40	71	110	162
9.0	7	19	39	70	109	161
9.2	7	19	39	70	108	159
9.4	7	19	39	69	107	158
9.6	7	19	39	69	107	157
9.8	7	19	38	68	106	156
10.0	7	19	38	68	105	154
10.2	7	19	38	67	104	153
10.4	7	18	38	67	103	152
10.6	7	18	37	67	103	151
10.8	7	18	37	66	102	150
11.0	7	18	37	66	101	148
11.2	7	18	37	65	101	147
11.4	7	18	37	65	100	146
11.6	7	18	36	64	99	145
11.8	7	18	36	64	98	144
12.0	7	18	36	64	98	143

Notes:

1. Computed using Superelevation Distribution Method 2.
2. Superelevation may be optional on low-speed streets in urban areas.
3. Negative superelevation values beyond −2.0 percent should be used for unpaved surfaces such as gravel, crushed stone, and earth. However, a normal cross slope of −2.5 percent may be used on paved surfaces in areas with intense rainfall.

Copyright American Association of State Highway and Transportation Officials
Provided by IHS Markit under license with AASHTO
No reproduction or networking permitted without license from IHS
© 2018 by the American Association of State Highway and Transportation Officials
All rights reserved. Duplication is a violation of applicable law.

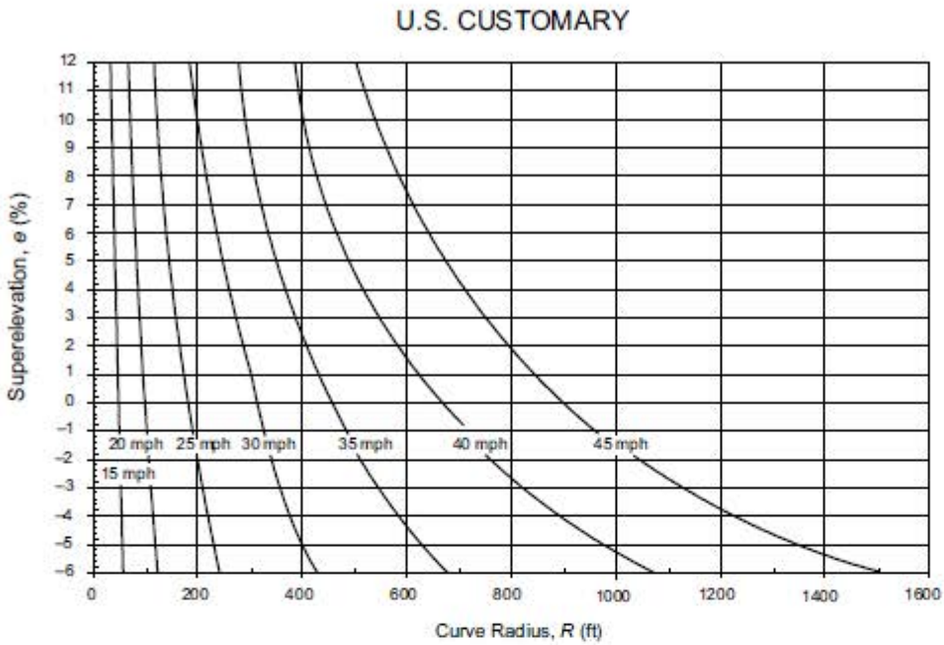

Note: Negative superelevation values beyond –2.0 percent should be used for unpaved surfaces such as gravel, crushed stone, and earth. However, areas with intense rainfall may use normal cross slopes of –2.5 percent on paved surfaces.

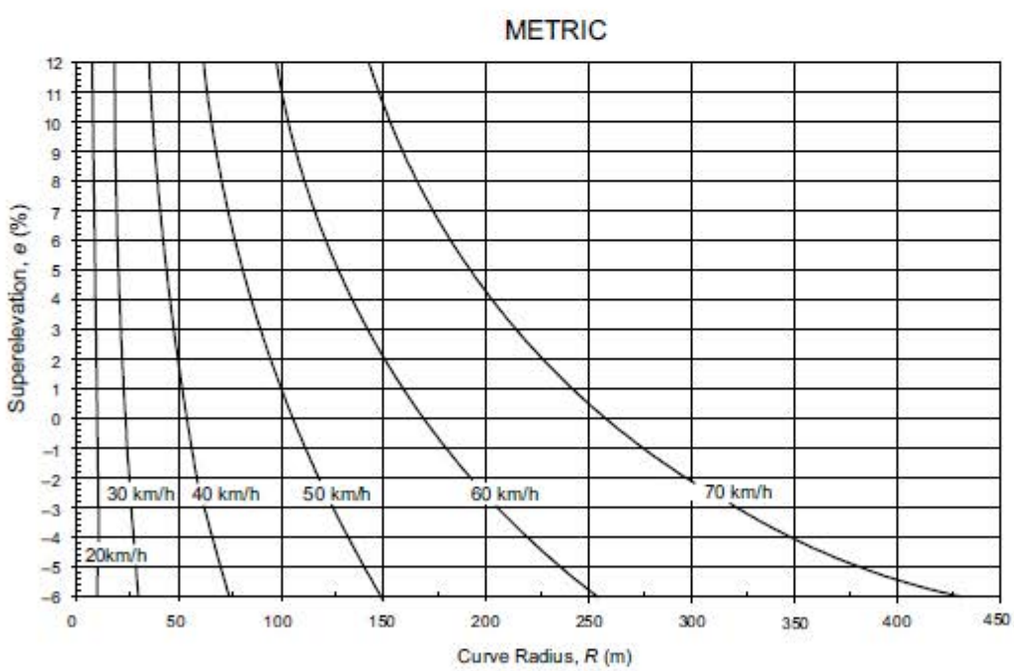

Note: Negative superelevation values beyond –2.0 percent should be used for unpaved surfaces such as gravel, crushed stone, and earth. However, areas with intense rainfall may use normal cross slopes of –2.5 percent on paved surfaces.

Figure 3-7. Superelevation, Radius, and Design Speed for Low-Speed Street Design in Urban Areas Sharpest Curve without Superelevation Minimum Radius for Section with Normal Crown

Copyright American Association of State Highway and Transportation Officials
Provided by IHS Markit under license with AASHTO
No reproduction or networking permitted without license from IHS
© 2018 by the American Association of State Highway and Transportation Officials
All rights reserved. Duplication is a violation of applicable law.

The –2.0 percent row in Table 3-13 provides the minimum curve radii for which a normal crown of 2.0 percent should be retained. Likewise, the –1.5 percent row provides the minimum curve radii for which a normal crown of 1.5 percent should be retained. Sharper curves should have no adverse cross slope and should be superelevated in accordance with Table 3-13.

3.3.7 Turning Roadways

Turning roadways include interchange ramps and intersection curves for right-turning vehicles. Loop or diamond configurations for turning roadways are commonly used at interchanges and consist of combinations of tangents and curves.

Turning roadways are generally designed for lower speeds than the through travel lanes. On streets in urban areas, the radius has a direct effect on the length of pedestrian crosswalks. The selection of the curve radius should consider all likely users of the intersection and, where both trucks and pedestrians are present, should seek an appropriate balance between their needs. In selecting a minimum radius, it is recognized that sharper curves, having shorter lengths, need wider travel lanes to accommodate the swept path of the turning vehicle and provide less opportunity for developing a large rate of superelevation. This condition applies particularly to intersections where the turning roadway is often close to the intersection proper, where much of its area is adjacent to the through traveled way, and where the complete turn is made through a total angle of about 90 degrees.

Turning roadway design does not apply to the design for turns at intersections without separate turning roadways. Refer to Chapter 9 for the design of intersections, including the use of compound curves to accommodate the inside edge of the design vehicle's swept path.

3.3.7.1 Design Speed

As further discussed in Chapter 9, vehicles turning at intersections designed for minimum-radius turns have to operate at low speed, perhaps less than 10 mph [15 km/h]. It is often appropriate for economy of construction and to limit conflicts with other road users for drivers to use lower turning speeds at most intersections. The speeds for which these intersection curves should be designed depend on vehicle speeds on the approach highways, the type of intersection, and the volumes of through and turning traffic.

3.3.7.2 Maximum Superelevation for Turning Roadways

Turning roadways are generally designed for lower speeds than the through-travel lanes. For low-speed facilities, the use of Method 2 for distributing superelevation is appropriate. On high-speed interchange ramps, as much superelevation as practical, up to a maximum value based on Method 5, should be developed on ramps to reduce the potential for vehicle skidding and overturning.

Copyright American Association of State Highway and Transportation Officials
Provided by IHS Markit under license with AASHTO
No reproduction or networking permitted without license from IHS
© 2018 by the American Association of State Highway and Transportation Officials
All rights reserved. Duplication is a violation of applicable law.